REDUNDANT INFLUENT LINE
WASTEWATER TREATMENT FACILITY

BURLINGTON, IOWA

2024

CERTIFICATION

LICENSED PROFESSIONAL ENGINEER
MATTHEW J. WILDMAN
17910
IOWA

I hereby certify that this engineering document was prepared by me or under my direct personal supervision and that I am a duly licensed Professional Engineer under the laws of the State of Iowa.

MATTHEW J. WILDMAN, P.E. DATE
License Number: 17910
My license renewal date is December 31, 2025.
Pages or sheets covered by this seal:
G, C, AND P SHEETS

LICENSED PROFESSIONAL ENGINEER
CRISTIAN APARICIO
28010
IOWA

I hereby certify that this engineering document was prepared by me or under my direct personal supervision and that I am a duly licensed Professional Engineer under the laws of the State of Iowa.

CRISTIAN APARICIO, P.E. DATE
License Number: 28010
My license renewal date is December 31, 2024.
Pages or sheets covered by this seal:
ALL S SHEETS

LICENSED PROFESSIONAL ENGINEER
KEVIN SPARROW
23801
IOWA

I hereby certify that this engineering document was prepared by me or under my direct personal supervision and that I am a duly licensed Professional Engineer under the laws of the State of Iowa.

KEVIN SPARROW, P.E. DATE
License Number: 23801
My license renewal date is December 31, 2024.
Pages or sheets covered by this seal:
ALL E SHEETS

LOCATION MAP



SHEET INDEX

Sheet Number	Sheet Title
GENERAL	
G000	COVER SHEET
G001	LEGENDS
G002	ABBREVIATIONS
G003	ESTIMATED PROJECT QUANTITIES
G004	ESTIMATE REFERENCE INFORMATION
G101	HEADWORKS PROCESS FLOW DIAGRAM
G102	HYDRAULIC PROFILE
CIVIL	
C101	SITE LAYOUT
C102	CIVIL PLAN
C501	DETAILS
STRUCTURAL	
S001	TYPICAL DETAILS
S101	PLATFORM AND STAIR DETAILS
S102	SECTIONS & DETAILS
PROCESS	
P101	INFLUENT PIPING – PROCESS PLAN
P102	INFLUENT PIPING – PROCESS ROOM
P301	INFLUENT PIPING – PROCESS SECTIONS
P302	INFLUENT PIPING – PROCESS SECTIONS
P601	VALVE & FITTING SCHEDULE
ELECTRICAL	
E000	GENERAL INFORMATION
E101	ELECTRICAL PLAN
E501	ONE LINE DIAGRAM & SCHEMATIC
E502	DETAILS
E601	SCHEDULES

HRGreen

8710 EARHART LANE SW | CEDAR RAPIDS, IOWA 52404
Phone: 319.841.4000 | Toll Free: 800.728.7805 | Fax: 713.965.0044 | HRGreen.com

THE IOWA STATEWIDE URBAN DESIGN AND SPECIFICATIONS (SUDAS) LATEST REVISIONS – 2023 EDITION, SHALL APPLY TO CONSTRUCTION ON THIS PROJECT.

12/19/2025 RECORD DRAWINGS

DRAWN BY: JMM JOB DATE: 2023
APPROVED: MJW JOB NUMBER: 220608
CAD DATE: 12/18/2025 11:38:32 PM
CAD FILE: J:\2022\220608\CAD\Dwgs\G\G000 COVER SHEET.dwg

BAR IS ONE INCH ON OFFICIAL DRAWINGS. 0 1"
IF NOT ONE INCH, ADJUST SCALE ACCORDINGLY.

NO.	DATE	BY	REVISION DESCRIPTION

HRGreen HRGreen.com

REDUNDANT INFLUENT LINE
WASTEWATER TREATMENT FACILITY
BURLINGTON, IOWA

GENERAL
COVER SHEET

SHEET NO.
G000

Xrefs: xgl-1-dh01

ARCHITECTURAL LEGEND

- 101 — ROOM NUMBER
- 101 — DOOR NUMBER
- 101 — WINDOW NUMBER
- EXISTING DOOR AND OR FRAME TO REMAIN
- NEW DOOR AND OR FRAME
- EXISTING WALL
- NEW CONCRETE WALL
- NEW MASONRY WALL SEE STRUCTURAL SHEETS FOR CONSTRUCTION
- TOC 1151.25 — ELEVATION MARKER
- RD — ROOF DRAIN (RD)
- SLOPE — STRUCTURAL SLOPE
- TAPERED INSULATION SLOPE
- SCUPPER
- ANTENNA
- ROOF HATCH
- GUYWIRE ANCHOR
- SP — SOIL PIPE (SP)
- TOWER
- HS — HEAT STACK (HS)
- ROOF VENT
- WALKWAY PADS
- MECHANICAL OPENING WITH CURB
- RIGID INSULATION SEE STRUCTURAL SHEETS FOR CONSTRUCTION

EQUIPMENT/VALVE TAGS

BFV BUTTERFLY VALVE
CKV CHECK VALVE
DHS DUMPSTER HOOKLOAD SYSTEM
FLM FLOW METER
HFP HIGH FLOW PUMP
KGV KNIFE GATE VALVE
MS MECHANICAL SCREEN
OCU ODOR CONTROL UNIT
OHD OVERHEAD DOOR
PV PLUG VALVE
SG SLUICE GATE
SP SUMP PUMP

PROCESS ONE-LINE SYMBOLS

- PIPING CUT LOOKING AWAY
- PIPING CUT TOWARDS
- BEND
- CAP OR PLUG
- CONCENTRIC REDUCER
- MECHANICAL COUPLING
- CROSS
- ECCENTRIC REDUCER
- SINGLE FLANGE
- DOUBLE FLANGE
- FLEX CONNECTION
- GROOVED JOINT COUPLING
- MECHANICAL JOINT
- TEE
- UNION
- WYE
- AIR VACUUM RELIEF
- BALL VALVE
- BALL CHECK VALVE
- CHECK VALVE
- V-BALL VALVE
- BUTTERFLY VALVE
- DIAPHRAGM VALVE
- GATE VALVE
- GLOBE VALVE
- FLAP GATE VALVE
- KNIFE GATE VALVE
- MUD VALVE
- MULTI PORT VALVE
- NEEDLE VALVE
- PINCH VALVE
- PLUG VALVE
- PRESSURE CONTROL VALVE
- SLIDE GATE VALVE
- SLUICE GATE VALVE
- STOP GATE VALVE
- M — ELECTRIC ACTUATOR
- P — PNEUMATIC ACTUATOR
- S — SAMPLER LOCATION

CIVIL LEGEND

- BENCHMARK, CONTROL POINT, ELEVATION INDICATOR
- CONCRETE MONUMENT
- IRON PIN FOUND
- IRON PIN SET
- OPEN PIPE
- ROW RAIL
- SECTION CORNER
- CHISELED X
- AREA INTAKE
- FIRE HYDRANT
- GUY WIRE
- MAILBOX
- POWERPOLE
- CONIFEROUS TREE
- DECIDUOUS TREE
- CORNER MONUMENT
- B-INT — BEEHIVE INTAKE
- TV — CABLE BOX
- CO — CLEAN OUT
- ELECTRIC METER
- E — ELECTRIC BOX
- PHONE BOOTH
- GAS METER
- CURB INTAKE
- HANDICAP
- INTAKE
- LIGHT POLE
- S — SANITARY MANHOLE
- MONITORING WELL
- POST
- RAILROAD SIGN
- SATELLITE DISH
- SIGN
- SIGN
- SOIL BORING
- TREE STUMP
- T — TELEPHONE BOX
- TELEPHONE PEDESTAL
- TRAFFIC SIGNAL
- TRAFFIC SIGN
- YARD LIGHT
- BURIED VALVE

NORTH — TRUE NORTH ARROW

0 20 — 1"=20' — CIVIL SCALE BAR

1 BLDG DETAIL OR SECTION

SCALE: TO SCALE

1 BLDG PLAN/DETAIL/SECTION NOT TO SCALE OR CIVIL

NTS

- PROPOSED PAVEMENT DEMOLITION
- EXISTING GRAVEL
- EXISTING PAVING

- 1050 — EXISTING MAJOR CONTOUR
- 1049 — EXISTING MINOR CONTOUR
- EXISTING FENCE
- X — X — EXISTING ROW FENCE
- EXISTING GRAVEL SURFACE
- EXISTING SECTION LINE
- UGTV — EXISTING UNDERGROUND TELEVISION
- OE — OE — EXISTING OVERHEAD ELECTRIC
- UE — UE — EXISTING UNDERGROUND ELECTRIC
- FO — EXISTING FIBEROPTIC
- G — G — EXISTING GAS
- 6"SAN — EXISTING SANITARY SEWER
- 10"ST — EXISTING STORM SEWER
- UGT — EXISTING UNDERGROUND TELEPHONE
- 1041 — EXISTING MINOR CONTOUR
- 1045 — EXISTING MAJOR CONTOUR
- W — W — EXISTING WATER
- W3 — EXISTING FLUSHING WATER
- R/W — R/W — EXISTING RIGHT OF WAY
- PL — PL — EXISTING PROPERTY LINE
- **1041** — PROPOSED MINOR CONTOUR
- **1045** — PROPOSED MAJOR CONTOUR
- TREE PROTECTION
- PROPOSED FENCE
- PROPOSED PERMANENT EASEMENT
- X — X — PROPOSED SILT FENCE
- PROPOSED TEMPORARY EASEMENT
- PROPOSED CULVERT
- ST — DEMOLITION
- GAS — PROPOSED GAS LINE
- W3 — PROPOSED PLANT EFFLUENT WATER
- SAN — PROPOSED SANITARY SEWER
- ST — PROPOSED STORM SEWER
- FIRE — PROPOSED FIRE PROTECTION WATER
- W — W — PROPOSED POTABLE WATER
- IRR — PROPOSED POTABLE WATER

- PROPOSED CRUSHED STONE
- PROPOSED CONCRETE PAVING
- PROPOSED HOT-MIX ASPHALT PAVING

UITLITY CONTACT INFORMATION:

(ASE) Alliant Energy
Alliant Energy Field Engineer Contact
Phone: 800-255-4268
Email: locate_IPL@alliantenergy.com

(BURL) City of Burlington
Contact: Steve Hartman
Phone: 319-753-8176
Email: hartmans@burlingtoniowa.org

(BURL) City of Burlington
Contact: Don Fitting
TITLE: Wastewater Treatment Facility Supervisor
Phone: 319-753-8157
Email: fittingd@burlingtoniowa.org

(BWW) Burlington Municipal Water WOR
Contact: Shane Johnson
Phone: 319-754-6501
Email: johnsons@burlingtoniowa.org

(CTLIA01) Centurylink
Contact: Sadie Hull
Phone: 918-547-0147
Email: sadie.hull@lumen.com

(TC9) Mediacom
Contact: Darrin Walker
Phone: 319-759-3786
Email: dwalker@mediacomcc.com

UTILITY NOTES

WHERE PUBLIC UTILITY FIXTURES ARE SHOWN AS EXISTING ON THE PLANS OR ENCOUNTERED WITHIN THE CONSTRUCTION AREA, IT SHALL BE THE RESPONSIBILITY OF THE CONTRACTOR TO NOTIFY THE OWNERS OF THOSE UTILITES PRIOR TO THE BEGINNING OF ANY CONSTRUCTION. THE CONTRACTOR SHALL AFFORD ACCESS TO THESE FACILITIES FOR NECESSARY MODIFICATION OF SERVICES. UNDERGROUND FACILITIES, STRUCTURES AND UTILITIES HAVE BEEN PLOTTED FROM AVAILABLE SURVEYS AND RECORDS, AND THEREFORE THEIR LOCATIONS MUST BE CONSIDERED APPROXIMATE ONLY. IT IS POSSIBLE THERE MAY BE OTHERS, THE EXISTENCE OF WHICH PRESENTLY NOT KNOWN OR SHOWN. IT IS THE CONTRACTOR'S RESPONSIBILITY TO DETERMINE THEIR EXISTENCE AND EXACT LOCATION AND TO AVOID DAMAGE THERETO. NO CLAIMS FOR ADDITIONAL COMPENSATION WILL BE ALLOWED TO THE CONTRACTOR FOR ANY INTERFERENCE OR DELAY CAUSED BY SUCH WORK.

THE CONTRACTOR IS REQUIRED TO UTILIZE THE UTILITY ONE-CALL SERVICE AT (800) 292-8989 AT LEAST 48 HOURS PRIOR TO EXCAVATING ANYWHERE ON THE PROJECT.

IOWA ONE CALL
CALL BEFORE YOU DIG!
1-800-292-8989
www.iowaonecall.com
811 Call before you dig

GENERAL NOTE:

1. "SCREENED" (LIGHT) DELINEATION DENOTES EXISTING CONDITION. "SCREENED" INFORMATION WAS TAKEN FROM PREVIOUS CONSTRUCTION DRAWINGS AND FIELD SURVEY, IS FOR REFERENCE ONLY, AND SHALL BE FIELD VERIFIED BY THE CONTRACTOR PRIOR TO ORDERING OF MATERIALS AND BEGINNING CONSTRUCTION. "BOLD" DELINEATION IS NEW WORK TO BE CONSTRUCTED UNDER THIS CONTRACT.

NOTE:

NOT ALL SYMBOLS SHOWN IN THESE LISTS MAY BE USED IN THIS PROJECT. CONTACT ENGINEER FOR CLARIFICATION OF ANY DISCREPANCIES.

12/19/2025 RECORD DRAWINGS

Xrefs: xgl-1-dh01

DRAWN BY: CMB — JOB DATE: 2023
APPROVED: JPF — JOB NUMBER: 220608
CAD DATE: 12/18/2025 11:38:13 PM
CAD FILE: J:\2022\220608\CAD\Dwgs\G\G001 LEGENDS.dwg

BAR IS ONE INCH ON OFFICIAL DRAWINGS. 0 1"
IF NOT ONE INCH, ADJUST SCALE ACCORDINGLY.

NO.	DATE	BY	REVISION DESCRIPTION

HRGreen.com
HRGreen

REDUNDANT INFLUENT LINE
WASTEWATER TREATMENT FACILITY
BURLINGTON, IOWA

GENERAL
LEGENDS

SHEET NO.
G001

ABBREVIATIONS

@	AT
A	AMPS, AMPERES
AAV	AUTOMATIC AIR VENT
AB	ANCHOR BOLT
AC	ALTERNATING CURRENT
ACC	ASPHALTIC CEMENT CONCRETE
ACT	ACOUSTIC CEILING TILE
ACU	AIR CONDITIONING UNIT
AD	ACCESS DOOR, AIR DRYER
ADP	AUTO DIALER PNL
ADH	ADHESIVE
A/E	ARCHITECTURAL / ENGINEERING FIRM
AF	AMPERE FRAME
AFD	ADJUSTABLE FREQUENCY DRIVE
AFF	ABOVE FINISHED FLOOR
AFUE	ANNUAL FUEL UTILIZATION EFFICIENCY
AFG	ABOVE FINISHED GRADE
AH	ACCESS HATCH
AHU	AIR HANDLING UNIT
AIC	AMPERES INTERRUPTING CAPACITY
ALT	ALTERNATE
ALUM, AL	ALUMINUM
AMB	AMBIENT
ANCH	ANCHOR
ANOD	ANODIZED
ANSI	AMERICAN NATIONAL STANDARDS INSTITUTE
ARCH	ARCHITECT, ARCHITECTURAL
AS	AIR SEPARATOR
ASHRAE	AMERICAN SOCIETY OF HEATING, REFRIGERATING, AND AIR CONDITIONING ENGINEERS
ASTM	AMERICAN SOCIETY FOR TESTING AND MATERIALS
AT	AMPERE TRIP
ATS	AUTOMATIC TRANSFER SWITCH
AVG	AVERAGE
AWG	AMERICAN WIRE GAGE
B/	BOTTOM OF, BACK OF
B/B	BACK TO BACK (OF CURBS)
BBH	BASEBOARD HEATER
BC	BARE COPPER
B/C	BACK OF CURB
BD BM	BOND BEAM
BDD	BACKDRAFT DAMPER
BF	BLIND FLANGE
BFP	BACKFLOW PREVENTOR, BELT FILTER PRESS
BFV	BUTTERFLY VALVE
BHP	BRAKE HORSEPOWER
BLDG	BUILDING
BLK	BLOCK
BOD	BOTTOM OF DUCT, BIOLOGICAL OXYGEN DEMAND
BOP	BOTTOM OF PIPE
BM	BENCH MARKER
BOT	BOTTOM
BOW	BOTTOM OF WALL
BRG	BEARING
BRK	BRICK
BTU	BRITISH THERMAL UNIT
BTUH	BTU PER HOUR
BTWN	BETWEEN
BV	BALL VALVE
C	CONDUIT, CELSIUS, C STRUCTURAL SHAPE
CAP	CAPACITY
CB	CIRCUIT BREAKER
CC	COILING COIL, CONSTRUCTION CASTING
CD	CEILING DIFFUSER
CFH	CUBIC FEET PER HOUR
CFM	CUBIC FEET PER MINUTE
CH	CONCRETE HARDENER
CI	CAST IRON
CIP	CAST IN PLACE, CLEAN IN PLACE, CAST IRON PIPE
CJ	CONTROL OR CONSTRUCTION JOINT
CKT	CIRCUIT
CL	CENTER LINE
CLG	CEILING, COOLING
CLR	CLEAR, CLEARANCE
CMPR	COMPRESSOR
CMU	CONCRETE MASONRY UNIT
CND	CONDENSATE
CO	CLEAN OUT
COL	COLUMN
COMP	COMPRESSION
CONC	CONCRETE
COND	CONDENSER, CONDUIT
CONT	CONTINUE (OUS)
CONTR	CONTRACTOR
COORD	COORDINATE
COP	COEFFICIENT OF PERFORMANCE
CORP	CORPORATION
CP	CORNER POINT
CPT	CONTROL POWER TRANSFORMER, CARPET
CPVC	CHLORINATED POLYVINYL CHLORIDE
CRS	COURSES
CT	CURRENT TRANSFORMER
CTRS	CENTERS
CU	CONDENSING UNIT, COPPER
CU FT	CUBIC FEET
CU IN	CUBIC INCH
CW	CHILLED WATER
CWP	CONDENSER WATER PUMP
CY	CUBIC YARD
D	DECANT
DB	DRY BULB TEMPERATURE, DIRECT BURIED
DBL	DOUBLE
DC	DIRECT CURRENT
DEG	DEGREE
DEMO	DEMOLITION
DEPT	DEPARTMENT
DG	DOOR GRILLE
DGS	DIGESTER SLUDGE
DI	DUCTILE IRON
DIA,ø	DIAMETER
DIM	DIMENSION
DIP	DUCTILE IRON PIPE
DL	DEAD LOAD
DN	DOWN
DP	DEWPOINT TEMPERATURE
DPR	DAMPER
DRN	DRAIN
DS	DOWN SPOUT
DTL	DETAIL(S)
DWG	DRAWING(S)
DWL	DOWEL
DX	DIRECT EXPANSION
E	EQUIPMENT, EASTING
EA	EACH, EXHAUST AIR
EAT	ENTERING AIR TEMPERATURE
ECC	ECCENTRIC
ECP	ENVIRONMENTAL CONTROL PANEL
EDH	ELECTRIC DUCT HEATER
EER	ENERGY EFFICIENCY RATIO
EF	EXHAUST FAN, EACH FACE
EFF	EFFICIENCY, EFFLUENT
EG	EXHAUST GRILLE, EQUIPMENT GENERATOR
EJ	EXPANSION JOINT
EL	ELEVATION
ELEC	ELECTRICAL
ELEV	ELEVATION
EMBED	EMBEDMENT
ENCL	ENCLOSURE
ENG	ENGINEER
EP	EXPLOSION PROOF, EPOXY PAINT
EQ, EQUIP	EQUAL, EQUIPMENT
EQMT	EQUIPMENT
ER	EXHAUST REGISTER
ESP	EXTERNAL STATIC PRESSURE
ET	EXPANSION TANK
ETM	ELAPSED TIME METER
EUH	ELECTRIC UNIT HEATER
EVAP	EVAPORATOR
EW	EACH WAY
EWC	ELECTRIC WATER COOLER
EWEF	EACH WAY EACH FACE
EWT	ENTERING WATER TEMPERATURE
EXIST	EXISTING
EXP	EXPANSION
EXP MAT	EXPANSION MATERIAL
EXT	EXTERIOR, EXTERNAL
F	DEGREES FAHRENHEIT, FLUORIDE
FA	FACE AREA, FREE AREA
FAB	FABRICATE(D)
FAC	FLANGED ADAPTOR COUPLING
FB	FLAT BAR, FLOOR BEAM
FC	FAN COIL UNIT, FLEXIBLE CONNECTION
FCA	FLANGE COUPLING ADAPTOR
FD	FIRE DAMPER, FLOOR DRAIN
FDGGF	FREE DRAINING GRADED GRANULAR FILL
FDN	FOUNDATION
FE	FLANGED END, FIRE EXTINGUISHER
FEC	FIRE EXTINGUISHER CABINET
FF	FINISHED FLOOR
FG	FLOOR GRILLE
FH	FIRE HYDRANT
FIL	FILTRATE
FIN	FINISH
FIN FLR	FINISHED FLOOR
FL	FLOW LINE, FLUORESCENT
FLA	FULL LOAD AMPS
FLEX	FLEXIBLE
FLG	FLANGE
FLR	FLOOR
FM	FORCEMAIN
FO	FIBER OPTICS
FOB	FLAT ON BOTTOM
FOC	FACE OF CONCRETE
FOM	FACE OF MASONRY
FOS	FACE OF STEEL
FOT	FLAT ON TOP
FOW	FACE OF WALL
FPM	FEET PER MINUTE
FPS	FEET PER SECOND
FR	FLOOR REGISTER
FRP	FIBERGLASS REINFORCED PLASTIC OR PNL
FS	FLOOR STAND
FT	FEET, FLOW TRANSMITTER
FTG	FOOTING
FV	FIELD VERIFY
G	GATE, GROUND
GA	GAUGE, GAGE
GAL	GALLONS
GALV	GALVANIZED
GB	GYPSUM BOARD
GC	GAS CHROMATOGRAPH (FLOW COMPUTER)
GEN	GENERATOR
GFI	GROUND FAULT INTERRUPT
GFR	GROUND FAULT RELAY
GFS	GROUND FAULT SLAVE (PROTECTED UPSTREAM)
GL	GLASS
GPD	GALLONS PER DAY
GPH	GALLONS PER HOUR
GPM	GALLONS PER MINUTE
GRTG	GRATING
GV	GATE VALVE
GWB	GYPSUM WALL BOARD
GYP	GYPSUM
HB	HOSE BIBB
HC	HEATING COIL, HANDICAP (PED)
HCAP	HANDICAP (PED)
HD	HEAD
HDPE	HIGH DENSITY POLYETHYLENE
HDR	HEADER
HG	MERCURY
HH	HANDHOLE
HID	HIGH INTENSITY DISCHARGE
HM	HOLLOW METAL
HMA	HOT MIX ASPHALT
HOA	HAND OFF AUTOMATIC
HOR	HORIZONTAL
HP	HORSEPOWER, HIGH POINT
HPG	HIGH PRESSURE GAS
HPS	HIGH PRESSURE SODIUM
HR	HOUR
HSGL	HEAT STRENGTHENED GLASS
HSS	HOLLOW STRUCTURAL SHAPE
HT	HEIGHT
HTG	HEATING
HTR	HEATER
HU	HUMIDIFIER
HVAC	HEATING, VENTILATING, AIR CONDITIONING
HW	HOT WATER
HWC	HOT WATER RECIRCULATED
HWP	HEATING WATER PUMP
HWR	HOT WATER RETURN
HWS	HOT WATER SUPPLY
HWUH	HOT WATER UNIT HEATER
HX	HEAT EXCHANGER
HZ	HERTZ
IBC	INTERNATIONAL BUILDING CODE
IFC	INTERNATIONAL FIRE CODE
IPC	INTERNATIONAL PLUMBING CODE
IMC	INTERNATIONAL MECHANICAL CODE
ID	INSIDE DIAMETER
IE	INVERT ELEVATION
I/F, IF	INSIDE FACE
IN	INCHES
INC	INCANDESCENT
INF	INFLUENT
INSUL	INSULATION
INT	INTERIOR
INVT	INVERT
JB	JUNCTION BOX
JS	JANITOR SINK
JT, JNT	JOINT
K	STRUCTURAL BAR JOIST SHAPE
KCMIL	THOUSAND CIRCULAR MILS
KVA	1,000 VOLT AMPS
kW	1,000 WATT
KWH	KILOWATT – HOUR
L	LOUVER, ANGLE
LA	LIGHTNING ARRESTOR
LAB	LABORATORY
LAP	LEVEL ALARM PNL
LAT	LEAVING AIR TEMP, LATENT, LATITUDE
LAV	LAVATORY
LB(S)	POUND(S)
LD	LINEAR DIFFUSER
LF	LINEAR FEET
LFG	LANDFILL GAS
LFH	LANDFILL GAS (HIGH PRESS)
LFL	LANDFILL GAS (LOW PRESS)
LHR	LATENT HEAT RATIO
LIN	LINEAR
LL	LIVE LOAD
LLH	LONG LEG HORIZONTAL
LLV	LONG LEG VERTICAL
LONG	LONGITUDINAL
LOS	LOCKOUT STOP PUSH–BUTTON
LP	LOW POINT
LPG	LOW PRESSURE GAS
LRA	LOCKED ROTOR AMPS
LS	LIMIT SWITCH, LIFT STA.
LT	LEVEL TRANSDUCER
LTG	LIGHTING
LWT	LEAVING WATER TEMPERATURE
M	METER
MA	MILLIAMPERES
MAINT	MAINTENANCE
MAS	MASONRY
MAU	MAKEUP AIR UNIT
MAX	MAXIMUM
MBH	ONE THOUSAND BTUH
MCA	MINIMUM CIRCUIT AMPACITY
MCC	MOTOR CONTROL CENTER
MD	MOTORIZED DAMPER
MECH	MECHANICAL
MEZZ	MEZZANINE
MFR	MANUFACTURER
MG	MILLION GALLON
MGD	MILLION GALLONS PER DAY
MH	MANHOLE, METAL HALIDE
MIN	MINIMUM
MIRR	MIRRORED
MISC	MISCELLANEOUS
MJ	MECHANICAL JOINT
MK	MARK
MM	MAG METER
MO	MASONRY OPENING
MOCP	MAXIMUM OVERCURRENT PROTECTION
MPH	MILES PER HOUR
MTD	MOUNTED
MTL	METAL
MV	MUD VALVE
MW	MASONRY WALL
N	NEUTRAL, NORTHING
NA, N/A	NOT APPLICABLE
NC	NOISE CRITERIA, NORMALLY CLOSED
NEC	NATIONAL ELECTRICAL CODE
NEG	NEGATIVE
NFPA	NATIONAL FIRE PROTECTION ASSOCIATION
NIC	NOT IN CONTRACT
NL	NIGHTLIGHT
NO	NORMALLY OPEN, NUMBER
NOM	NOMINAL
NPT	NATIONAL PIPE THREAD
NPS	NOMINAL PIPE SIZE
NRP	NON–REMOVABLE PIN
NTS	NOT TO SCALE
OA	OUTSIDE AIR
OAT	OUTDOOR AIR TEMPERATURE
OBD	OPPOSED BLADE DAMPER
OC	ON CENTER
OD	OUTSIDE DIAMETER, OVERFLOW DRAIN
OED	OPEN END DUCT
O/F, OF	OUTSIDE FACE, OPEN FACE, OVERFLOW
OH	OVERHEAD
OHE	OVERHEAD ELECTRIC
OL	MOTOR OVERLOAD CONTACTS
OPNG	OPENING
OPP	OPPOSITE
OSB	ORIENTED STRAND BOARD
P	POLE, PUMP
PART	PARTIAL
PB	PUSHBUTTON, PULL BOX, PANEL BOARD
PBD	PARALLEL BLADE DAMPER
PC	PRECAST CONCRETE
PCC	PORTLAND CEMENT CONCRETE
PCF	POUNDS PER CUBIC FOOT
PCST	PRECAST
PD	PRESSURE DROP
PE	PLAIN END, POLYETHYLENE
PERF	PERFORATED
PERP	PERPENDICULAR
PG	PROFILE GRADE
PH	PHASE
PJF	PREFORMED JOINT FILLER
PL	PLATE, PURGE LINE
PLWD	PLYWOOD
PNL	PANEL
POJ	PUSH ON JOINT
PPM	PARTS PER MILLION
PR	PAIR
PROJ	PROJECTION
PRV	PRESSURE REDUCING VALVE
PS	PRESSURE SWITCH, PUMP STA.
PSF	POUNDS PER SQUARE FOOT
PSI	POUNDS PER SQUARE INCH
PSIA	PSI, ABSOLUTE
PSIG	PSI, GAGE
PSW	PLANT SERVICE WATER
PTAC	PACKAGED TERMINAL AIR CONDITIONER
PT	POTENTIAL TRANSFORMER, PAINT, PRESSURE TANK
PV	PLUG VALVE
PVC	POLYVINYL CHLORIDE
QTY	QUANTITY
R	RISER(S), RADIUS
RA	RETURN AIR
RAD	RADIUS
RAS	RETURN ACTIVATED SLUDGE
RB	ROOF BEAM, RESILIENT BASE
RCP	REINFORCED CONCRETE PIPE
RCMD	RECOMMENDED
RD	ROOF DRAIN
RECIRC	RECIRCULATE
RED	REDUCER
REF	REFERENCE
REINF	REINFORCE(ING)
REQ(D)	REQUIRE(D)
REV	REVISED
RF	RETURN FAN, RESILIENT FLOORING
RG	RETURN GRILLE
RH	RELIEF HOOD, RELATIVE HUMIDITY
RHC	REHEAT COIL
RJ	RESTRAINED JOINT
RM	ROOM
RO	ROUGH OPENING, REVERSE OSMOSIS
ROW	RIGHT OF WAY
RPM	REVOLUTIONS PER MINUTE
RR	RETURN REGISTER, RAILROAD
RS	RAW SEWAGE
RTU	ROOFTOP UNIT
RW	RESILIENT WEDGE
S&F	SECURITY & FIRE PNL
SA	SUPPLY AIR
SAN	SANITARY, SANITARY SEWER
SAT	SATURATION
SB	SOIL BORING
SCFM	CFM, AT STANDARD CONDITIONS
SCH	SCHEDULE
SD	SMOKE DAMPER
SEER	SEASONAL ENERGY EFFICIENCY RATIO EFFICIENCY RATIO
SEN	SENSIBLE
SF	SUPPLY FAN, SQUARE FOOT
SG	SUPPLY GRILLE, SLIDE/SLUICE GATE
SH	SHIELDED, SHOWER, SHEET
SIM	SIMILAR
SJ	SOFT JOINT, SAW CUT JOINT
SHR	SENSIBLE HEAT RATIO
SHT	SHEET
SIM	SIMILAR
SK	SINK
SL	SNOW LOAD
SMACNA	SHEET METAL AND AIR CONDITIONING CONTRACTORS NATIONAL ASSOCIATION
SP	STATIC PRESSURE, SUMP PUMP, SPACE(S)
SPEC	SPECIFICATION
SQ	SQUARE
SQ FT	SQUARE FEET
SR	SUPPLY REGISTER
SS	STAINLESS STEEL
SSH	SAFETY SHOWER
SSL	SECONDARY SLUDGE
SST	SATURATED SUCTION TEMPERATURE
STC	SOUND TRANSMISSION CLASS
STD	STANDARD
STL	STEEL
SUCT	SUCTION
SW	SWITCH, SAMPLING
T	TEMPERATURE, THREAD
T&B	TOP AND BOTTOM
TACH	TACHOMETER
TB	TERMINAL BOARD
TBS	THICKENED BLENDED SLUDGE
TCP	TEMP CONTROL PNL
TD	TEMPERATURE DIFFERENCE
TDH	TOTAL DYNAMIC HEAD
TEL	TELEPHONE
TEMP	TEMPERATURE, TEMPORARY, TEMPERED
TFR	TRICKLING FILTER RECYCLE
TGL	TEMPERED GLASS
TMV	THERMOSTATIC MIXING VALVE
T/	TOP OF
TOC	TOP OF CONCRETE
TOD	TOP OF DUCT
TONS	TONS OF REFRIGERATION
TOS	TOP OF STEEL
TOW	TOP OF WALL
TP	TWISTED PAIR
TR	TREAD(S)
TSG	TEMPERED SAFETY GLASS
TSP	TOTAL STATIC PRESSURE, TWISTED SHIELDED PAIR
TST	TWISTED SHIELDED TRIAD
TSTAT	THERMOSTAT
TWAS	THICKENED WASTE ACTIVATED SLUDGE
TYP	TYPICAL
U	HEAT TRANSFER COEFFICIENT
UBC	UNIFORM BUILDING CODE
UFC	UNIFORM FIRE CODE
UG	UNDERGROUND
UGE	UNDERGROUND ELECTRIC
UGT	UNDERGROUND TELEPHONE
UH	UNIT HEATER
UMC	UNIFORM MECHANICAL CODE
UNO	UNLESS NOTED OTHERWISE
UPC	UNIFORM PLUMBING CODE
UR	URINAL
V	VALVE, VENT, VOLTS
VA	VOLT – AMPERES
VAC	VACUUM
VAV	VARIABLE AIR VOLUME
VB	VINYL BASE, VALVE BOX, VAPOR BARRIER
VC	VICTAULIC COUPLING
VCP	VITRIFIED CLAY PIPE
VCT	VINYL COMPOSITION TILE
VD	VOLUME DAMPER
VEL	VELOCITY
VENT	VENTILATION
VERT	VERTICAL
VFD	VARIABLE FREQUENCY DRIVE
VLV	VALVE
VOL	VOLUME
VS	VARIABLE SPEED
VTR	VENT THRU ROOF
W	WATER, WATTS, WIDE FLANGE, WINDOW
W/	WITH
W/O	WITHOUT
WAP	WALL PIPE
WAS	WASTE ACTIVATED SLUDGE
WB	WET BULB
WC	WATER CLOSET, WATER COLUMN, WATER COOLER
WD	WOOD, WATER DISTILLED
WF	WIDE FLANGE
WG	WATER GAUGE
WH	WATER HEATER, WALL HYDRANT
WNDW	WINDOW, WINDOWS
WL	WIND LOAD
WP	WORK POINT, WEATHERPROOF, WATER PROOF
WS	WALL SLEEVE, WATERSTOP, WATER SURFACE
WSV	WALL SLEEVE
WSHP	WATER SOURCE HEAT PUMP
WT	WATER TANK
WW	WARM WATER, WASTE WATER
WWR	WELDED WIRE REINFORCING
XDCR	TRANSDUCER
XFMR	TRANSFORMER
XMTR	TRANSMITTER
YD	YARD
YDS	YARDS
YH	YARD HYDRANT
ZS	POSITION SWITCH

NOTE:

1. THE LIST OF ABBREVIATIONS SHOWN IS A STANDARD LIST. NOT ALL ABBREVIATIONS ARE USED IN THESE DRAWINGS

12/19/2025 RECORD DRAWINGS

Xrefs: xgt-1-db01

DRAWN BY: CMB JOB DATE: 2023
APPROVED: JPF JOB NUMBER: 220608
CAD DATE: 12/19/2025 7:44:29 AM
CAD FILE: J:\2022\220608\CAD\Dwgs\G\G002 ABBREVIATIONS

BAR IS ONE INCH ON OFFICIAL DRAWINGS.
0 1"
IF NOT ONE INCH, ADJUST SCALE ACCORDINGLY.

NO.	DATE	BY	REVISION DESCRIPTION

HRGreen HRGreen.com

REDUNDANT INFLUENT LINE
WASTEWATER TREATMENT FACILITY
BURLINGTON, IOWA

GENERAL
ABBREVIATIONS

SHEET NO.
G002

ESTIMATED PROJECT QUANTITIES

ITEM NO.	ITEM CODE	ITEM DESCRIPTION	UNIT	PLAN QUANTITY
DIVISION 4 SEWERS AND DRAINS				
4.01	4010-C-1	SANITARY SEWER FORCE MAIN, TRENCHED, MJ RJ DIP, 4-INCH	LF	6
4.02	4010-C-1	SANITARY SEWER FORCE MAIN, TRENCHED, MJ RJ DIP, 6-INCH	LF	11
4.03	4010-C-1	SANITARY SEWER FORCE MAIN, TRENCHED, MJ RJ DIP, 12-INCH	LF	8
4.04	4010-C-1	SANITARY SEWER FORCE MAIN, TRENCHED, MJ RJ DIP, 20-INCH	LF	46
4.05	4010-C-1	SANITARY SEWER FORCE MAIN, TRENCHED, MJ RJ DIP, 36-INCH	LF	6
4.06	-	SANITARY SEWER FORCE MAIN, ABOVE GRADE, FLANGED DIP, 20-INCH	LF	72
4.07	-	VENT PIPE, ABOVE GRADE, FLANGED DIP, 3-INCH	LF	37
4.08	-	DIP, 3-INCH FITTINGS	LS	1
4.09	-	DIP, 4-INCH FITTINGS	LS	1
4.10	-	DIP, 6-INCH FITTINGS	LS	1
4.11	-	DIP, 12-INCH FITTINGS	LS	1
4.12	-	DIP, 20-INCH FITTINGS	LS	1
4.13	-	DIP, 36-INCH FITTINGS	LS	1
4.14	-	INTERIOR PLUMBING REROUTE	EA	2
4.15	-	PLUG VALVE, 6-INCH	EA	3
4.16	-	PLUG VALVE, 12-INCH	EA	2
4.17	-	PLUG VALVE, 20-INCH	EA	4
4.17	-	MODULATING VALVE, 20-INCH	EA	1
4.18	-	ACTUATED VALVE, 20-INCH	EA	1
4.19	-	PLUG VALVE, 36-INCH	EA	1
4.20	-	HEAT TAPE SYSTEM & INSULATION FOR FREEZE PROTECTION	LS	1
DIVISION 7- STREETS AND RELATED WORK				
7.01	7010-E	CURB AND GUTTER 6 IN x18 IN	LF	45
7.02	7030-B	REMOVAL OF CURB	LF	45
7.03	7040-A	FULL DEPTH PATCHES, PCC, 9-INCH	SY	109
7.04	7040-H	PAVEMENT REMOVAL	SY	109
DIVISION 9-SITE WORK AND LANDSCAPING				
9.01	9010-B	HYDRAULIC SEEDING, SEEDING, FERTILIZING, AND MULCHING, TYPE 1	AC	0.05
9.02	9060-D	REMOVAL AND REINSTALLATION OF EXISTING FENCE	LF	45
DIVISION 10-DEMOLITION				
10.01	10,010-A	DEMOLITION	LS	1
DIVISION 11-MISCELLANEOUS				
11.01	11,020-A	MOBILIZATION	LS	1
11.02	-	CORE PIPE IN EXISTING STRUCTURE	EA	4
11.03	-	CONCRETE PIPE SUPPORTS	EA	8
11.04	-	SS BAFFLE	LS	1
11.05	-	BOLLARDS	EA	5
11.06	-	STEEL PIPE SUPPORTS(STAINLESS)	EA	3
11.07	-	STAIRS	LS	1
11.08	-	PARTIAL MAGNETIC FLOW METER	EA	1
11.09	-	RADAR LEVEL TRANSMITTER	EA	1
11.1	-	EXISTING CONTROL PANEL MODIFICATIONS & PROGRAMMING	LS	1
11.11	-	REDUNDANT LINE ELECTRICAL	LS	1

12/19/2025 RECORD DRAWINGS

DRAWN BY: JMM JOB DATE: 2023
APPROVED: MJW JOB NUMBER: 220608
CAD DATE: 12/18/2025 11:38:44 PM
CAD FILE: J:\2022\220608\CAD\Dwgs\G\G003 ESTIMATED PROJECT QUANTITIES.dwg

BAR IS ONE INCH ON OFFICIAL DRAWINGS.
0 1"
IF NOT ONE INCH, ADJUST SCALE ACCORDINGLY.

NO.	DATE	BY	REVISION DESCRIPTION

HRGreen.com
HRGreen

REDUNDANT INFLUENT LINE
WASTEWATER TREATMENT FACILITY
BURLINGTON, IOWA

GENERAL
ESTIMATED PROJECT QUANTITIES

SHEET NO.
G003

Xrefs: xgt-1-db01

ESTIMATE REFERENCE INFORMATION		
ITEM NO.	ITEM CODE	DESCRIPTION
4.01	4010-C-1	SANITARY SEWER FORCE MAIN, TRENCHED, MJ RJ DIP, 4-INCH
4.02	4010-C-1	SANITARY SEWER FORCE MAIN, TRENCHED, MJ RJ DIP, 6-INCH
4.03	4010-C-1	SANITARY SEWER FORCE MAIN, TRENCHED, MJ RJ DIP, 12-INCH
4.04	4010-C-1	SANITARY SEWER FORCE MAIN, TRENCHED, MJ RJ DIP, 20-INCH
4.05	4010-C-1	SANITARY SEWER FORCE MAIN, TRENCHED, MJ RJ DIP, 36-INCH
		A. REFER TO SPECIFICATION SECTION 22 1116 FOR MATERIAL REQUIREMENTS. INSTALLATION AND TESTING SHALL BE PER SUDAS.
		B. ALL BURIED SANITARY SEWER FORCE SHALL BE RESTRAINED JOINT.
		C. PIPING QUANITIES ARE BASED ON PIPE LENGTHS EXCLUDING VALVES AND FITTINGS.
4.06	-	SANITARY SEWER FORCE MAIN, ABOVE GRADE, FLANGED DIP, 20-INCH
		A. REFER TO SPECIFICATION SECTION 22 1116 FOR MATERIAL REQUIREMENTS.
		B. PAINTING PER 09 9000 SHALL BE INCIDENTAL TO THIS BID ITEM.
		C. LINEAR FOOT PRICE SHALL INCLUDE BUT IS NOT LIMITED TO, PIPING, MATERIALS, LABOR, TOOLS, EQUIPMENT, WATERTIGHT SEALS, PAINTINGS, COATINGS, INSTALLATION, WARRANTY, AND INSPECTION/TESTING FOR EACH TYPE AND SIZE OF PIPE.
		D. EACH MATERIAL AND SIZE OF PIPE INSTALLED SHALL BE MEASURED ALONG THE CENTERLINE OF THE PIPE IN THE HORIZONTAL OR VERTICAL DIRECTION.
		E. TESTING SHALL BE PER SUDAS 4060.
		F. PIPING QUANITIES ARE BASED ON PIPE LENGTHS EXCLUDING VALVES AND FITTINGS.
4.07	-	VENT PIPE, ABOVE GRADE, FLANGED DIP, 3-INCH
		A. REFER TO SPECIFICATION SECTION 22 1116 FOR MATERIAL REQUIREMENTS.
		B. PAINTING PER 09 9000 SHALL BE INCIDENTAL TO THIS BID ITEM.
		C. LINEAR FOOT PRICE SHALL INCLUDE BUT IS NOT LIMITED TO, PIPING, MATERIALS, LABOR, TOOLS, EQUIPMENT, WATERTIGHT SEALS, PAINTINGS, COATINGS, INSTALLATION, WARRANTY, AND INSPECTION/TESTING FOR EACH TYPE AND SIZE OF PIPE.
		D. EACH MATERIAL AND SIZE OF PIPE INSTALLED SHALL BE MEASURED ALONG THE CENTERLINE OF THE PIPE IN THE HORIZONTAL OR VERTICAL DIRECTION.
		E. TESTING SHALL BE PER SUDAS 4060.
		F. PIPING QUANITIES ARE BASED ON PIPE LENGTHS EXCLUDING VALVES AND FITTINGS.
4.08	-	DIP, 3-INCH FITTINGS
4.09	-	DIP, 4-INCH FITTINGS
4.1	-	DIP, 6-INCH FITTINGS
4.11	-	DIP, 12-INCH FITTINGS
4.12	-	DIP, 20-INCH FITTINGS
4.13	-	DIP, 36-INCH FITTINGS
		A. REFER TO SPECIFICATION SECTION 22 1116.01.
		B. PAINTING PER 09 9000 SHALL BE INCIDENTAL TO THIS BID ITEM.
		C. SEE SHEET P601 FOR FITTING QUANTITIES.
		D. UNIT PRICE SHALL INCLUDE, BUT IS NOT LIMITED TO, MATERIALS, LABOR, TOOLS, EQUIPMENT, WATERTIGHT SEALS, PAINTINGS, COATINGS, INSTALLATION, EXCAVATION, DEWATERING, RESTRAINED JOINT, FURNISHING AND PLACING BEDDING MATERIAL (FOR BURIED FITTINGS), WARRANTY, AND INSPECTION/TESTING FOR EACH TYPE AND SIZE OF FITTING.
		E. EACH MATERIAL AND SIZE OF PIPE INSTALLED SHALL BE MEASURED ALONG THE CENTERLINE OF THE PIPE IN THE HORIZONTAL OR VERTICAL DIRECTION.
4.14	-	INTERIOR PLUMBING REROUTE
		A. SEE P SHEETS.
		B. INSULATION SHALL BE PER SPECIFICATION 22 0179.
		C. UNIT PRICE SHALL INCLUDE, BUT IS NOT LIMITED TO, SERVICE DISCONNECT, INSULATION, PIPE, FITTINGS, MATERIALS, LABOR, TOOLS, EQUIPMENT, AND INSTALLATION.
4.15	-	PLUG VALVE, 6-INCH
4.16	-	PLUG VALVE, 12-INCH
4.17	-	PLUG VALVE, 20-INCH
		A. REFER TO SPECIFICATION SECTION 22 0523.15 AND 22 0523.60.
		B. PAINTING PER 09 9000 SHALL BE INCIDENTAL TO THIS BID ITEM.
		C. UNIT PRICE SHALL INCLUDE, BUT IS NOT LIMITED TO, SUBMITTALS, LABOR, TOOLS, EQUIPMENT, VALVE BOXES, STEM EXTENSIONS, AND OPERATORS, FIELD TOUCHUP, PAINTINGS, COATINGS, WARRANTY, AND INSTALLATION.
4.17	-	MODULATING VALVE, 20-INCH
4.18	-	ACTUATED VALVE, 20-INCH
		A. REFER TO SPECIFICATION SECTION 22 0523.15, 22 0523.60, AND E SHEETS.
		B. PAINTING PER 09 9000 IS CONSIDERED INCIDENTAL TO THIS BID ITEM
		C. UNIT PRICE SHALL INCLUDE, BUT IS NOT LIMITED TO, SUBMITTALS, LABOR, TOOLS, EQUIPMENT, VALVE OPERATORS, FIELD TOUCHUP, PAINTINGS, COATINGS, WARRANTY, AND INSTALLATION.
4.19	-	PLUG VALVE, 36-INCH
		A. REFER TO SPECIFICATION SECTION 22 0523.15 AND 22 0523.60.
		B. PAINTING PER 09 9000 IS CONSIDERED INCIDENTAL TO THIS BID ITEM
		C. UNIT PRICE SHALL INCLUDE, BUT IS NOT LIMITED TO, SUBMITTALS, LABOR, TOOLS, EQUIPMENT, VALVE BOXES, STEM EXTENSIONS, INSULATION, FIELD TOUCHUP, PAINTINGS, COATINGS, WARRANTY, AND INSTALLATION.
		D. DEWATERING/DRAINING OF INFLUENT 36-INCH LINE SHALL BE INCIDENTAL TO THIS BID ITEM.
4.2	-	HEAT TAPE SYSTEM & INSULATION FOR FREEZE PROTECTION
		A. SEE P SHEETS FOR INSULATION AND FREEZE PROTECTION LOCATIONS.
		B. REFER TO SPECIFICATION SECTION 22 0533.
		C. LUMP SUM PRICE SHALL INCLUDE BUT IS NOT LIMITED TO SUBMITTALS, MATERIALS, INSULATION, TAPE, CABLE, CONNECTIONS, PUTTY, CABLE TIES, END SEALS, SPLICE KITS, INSTALLATION CLIPS, THERMOSTATS, CONTROLLERS, CONTACTOR, ALARMS, LABOR, TOOLS, AND EQUIPMENT.
7.01	7010-E	CURB AND GUTTER 6 IN x18 IN
		A. CONTRACTOR TO VERIFY SIZE IN FIELD AND MATCH EXISTING CURB AND GUTTER SIZE. BID SHALL BE BASED ON 6 IN. HEIGHT BY 18 IN. WIDTH.
7.02	7030-B	REMOVAL OF CURB
		A. SEE SHEET C102 FOR CURB REMOVAL EXTENTS.
7.03	7040-A	FULL DEPTH PATCHES, PCC, 9-INCH
		A. PAVEMENT PATCHES TO BE TO THE NEAREST PANEL/JOINT. EXTENTS MAY BE ALTERED BASED ON EXISTING PAVEMENT JOINTS, COORDINATE EXTENTS WITH OWNER.
7.04	7040-H	PAVEMENT REMOVAL
		A. SEE SHEET C102 FOR PAVEMENT REMOVAL EXTENTS.
		B. CONTRACTOR SHALL MEET WITH ENGINEER PRIOR TO PAVEMENT REMOVAL TO APPROVE EXTENTS.
9.01	9010-B	HYDRAULIC SEEDING, SEEDING, FERTILIZING, AND MULCHING, TYPE 1
		A. PROVIDE TYPE 1 PERMANENT SEEDING FOR ALL AREAS DISTURBED BY CONSTRUCTION.
9.02	9060-D	REMOVAL AND REINSTALLATION OF EXISTING FENCE
10.01	10,010-A	DEMOLITION
		A. PIPE REMOVAL AND BOLLARD REMOVAL SHALL BE INCIDENTAL TO THIS ITEM. SEE C102 and P101 SHEETS FOR DEMOLITION ITEMS.
		B. FOLLOW IOWA DNR REQUIREMENTS FOR DEMOLISHING STRUCTURES. CONTRACTOR IS RESPONSIBLE FOR ASBESTOS TESTING PRIOR TO DEMOLISHING ANY STRUCTURES, INCLUDING MANDATORY NOTICE TO IOWA DNR FOR DEMOLITION ACTIVITIES. TESTING WORK INCLUDES EXCAVATING BELOW GRADE TO EXPOSE THE EXTERIOR OF STRUCTURES SO AN ASBESTOS INSPECTOR CAN OBSERVE AND TEST, IF NECESSARY, FOR ASBESTOS CONTAINING COATINGS OR FINISHES. CONTRACTOR IS RESPONSIBLE FOR HIRING A STATE CERTIFIED ASBESTOS INSPECTOR TO PERFORM ALL REQUIRED TESTING AND ANALYSIS, THE COSTS OF ANY TESTING THAT IS NECESSARY, AND SUBMITTING A DEMOLITION NOTICE AND FEE TO THE IOWA DNR. IF ASBESTOS CONTAINING MATERIALS ARE FOUND, NOTIFY THE ENGINEER AND OWNER IMMEDIATELY. THE CONTRACTOR IS NOT RESPONSIBLE FOR ASBESTOS REMOVAL IF ASBESTOS IS FOUND BUT MAY BE REQUESTED TO ENGAGE A CERTIFIED REMOVAL CONTRACTOR AS AN ADDITIONAL OWNER'S COST. A SAMPLE DEMOLITION NOTICE TO THE DNR IS ATTACHED TO THIS SPECIFICATION.
11.01	11,020-A	MOBILIZATION
		A. SEE SUDAS SECTION 11020 FOR PROGRESS PAYMENTS FOR MOBILIZATION.
		B. ANY NECESSARY TRAFFIC CONTROL SHALL BE INCIDENTAL TO THIS BID ITEM.
11.02	-	CORE PIPE IN EXISTING STRUCTURE
		A. SEE S SHEETS FOR LOCATIONS OF CORE DRILL(S).
		B. UNIT PRICE SHALL INCLUDE, BUT IS NOT LIMITED TO, SUBMITTALS, MATERIALS, LABOR, TOOLS, PIPE CONNECTIONS, AND EQUIPMENT NEEDED TO CORE PIPE INTO THE EXISTING STRUCTURE.
11.03	-	CONCRETE PIPE SUPPORTS
		A. SEE S SHEETS FOR LOCATIONS OF PIPE SUPPORTS.
		B. UNIT PRICE SHALL INCLUDE BUT IS NOT LIMITED TO, MATERIALS, METALS, ANCHORS, CLAMPS, PADS, GROUT, LABOR, TOOLS, EQUIPMENT, AND INSTALLATION.
11.04	-	SS BAFFLE
		A. UNIT PRICE SHALL INCLUDE BUT IS NOT LIMITED TO, MATERIALS, METALS, ANCHORS, CLAMPS, PADS, GROUT, LABOR, TOOLS, EQUIPMENT, AND INSTALLATION.
11.05	-	BOLLARDS
		A. UNIT PRICE (EA) SHALL INCLUDE, BUT IS NOT LIMITED TO, MATERIALS, CONCRETE FOUNDATION, FILL, METALS, REFLECTIVE TAPE, SEALANT, PRIMER, PAINT, LABOR, TOOLS, EQUIPMENT, AND INSTALLATION.
		B. CONTRACTOR SHALL COORDINATE WITH OWNER AND ENGINEER TO DETERMIND QTY AND LOCATION OF BOLLARDS
11.06	-	STEEL PIPE SUPPORTS(STAINLESS)
		A. SEE S SHEETS FOR LOCATIONS OF PIPE SUPPORTS.
		B. REFER TO DIVISION 5 SPECIFICATIONS.
		C. UNIT PRICE SHALL INCLUDE BUT IS NOT LIMITED TO, MATERIALS, METALS, ANCHORS, CLAMPS, PADS, GROUT, LABOR, TOOLS, EQUIPMENT, AND INSTALLATION.
11.07	-	STAIRS
		A. SEE S SHEETS FOR LOCATION OF PROPOSED STAIRS.
		B. REFER TO SPECIFICATION SECTION 05 5100.
		C. LUMP SUM SHALL INCLUDE, BUT IS NOT LIMITED TO, MATERIALS, LABOR, TOOLS, EQUIPMENT, GRATING, HANDRAILS, SCREENING LADDER MODIFICATIONS, AND INSTALLATION.
11.08	-	PARTIAL MAGNETIC FLOW METER
		A. REFER TO SPECIFICATION SECTION 25 3100.
		B. SEE P.101 AND E SHEETS.
		C. UNIT PRICE SHALL INCLUDE, BUT IS NOT LIMITED TO, SUBMITTALS, MATERIALS, LABOR, TOOLS, EQUIPMENT, INSTALLATION, START-UP, WARRANTY, AND TRAINING
11.09	-	RADAR LEVEL TRANSMITTER
		A. REFER TO SPECIFICATION SECTION 25 3100.
		B. SEE P.101 AND E SHEETS.
		C. UNIT PRICE SHALL INCLUDE, BUT IS NOT LIMITED TO, SUBMITTALS, MATERIALS, LABOR, TOOLS, EQUIPMENT, INSTALLATION, START-UP, WARRANTY, AND TRAINING
11.1	-	EXISTING CONTROL PANEL MODIFICATIONS & PROGRAMMING
		A. REFER TO E SHEETS AND DIVISION 25 SPECIFICATIONS.
		B. LUMP SUM PRICE SHALL INCLUDE, BUT IS NOT LIMITED TO, SUBMITTALS, PROGRAMMING, MATERIALS, LABOR, TOOLS, EQUIPMENT, INSTALLATION, START UP, AND TRAINING.
11.11	-	REDUNDANT LINE ELECTRICAL
		A. SEE E SHEETS AND DIVISION 25 & 26 SPECIFICATIONS.
		B. LUMP SUM PRICE SHALL INCLUDE, BUT IS NOT LIMITED TO, SUBMITTALS, PULL BOXES, JUNCTION BOXES, CONDUITS, CONDUCTORS, INSTALLATION, TESTING, LABOR, TOOLS, AND EQUIPMENT.

12/19/2025 RECORD DRAWINGS

DRAWN BY: JMM JOB DATE: 2023
APPROVED: MJW JOB NUMBER: 220608
CAD DATE: 12/18/2025 11:39:12 PM
CAD FILE: J:\2022\220608\CAD\Dwgs\G\G004 ESTIMATE REFERENCE INFORMATION.dwg

BAR IS ONE INCH ON OFFICIAL DRAWINGS. 0 1"
IF NOT ONE INCH, ADJUST SCALE ACCORDINGLY.

NO.	DATE	BY	REVISION DESCRIPTION

HRGreen.com
HRGreen

REDUNDANT INFLUENT LINE
WASTEWATER TREATMENT FACILITY
BURLINGTON, IOWA

GENERAL
ESTIMATE REFERENCE INFORMATION

SHEET NO.
G004

Xrefs: xg-1-dn01

SYMBOL LEGEND

- MAGMETER
- PLUG VALVE
- DIRECTION OF FLOW
- BUTTERFLY VALVE
- GATE VALVE
- TELESCOPING VALVE
- CHECK VALVE

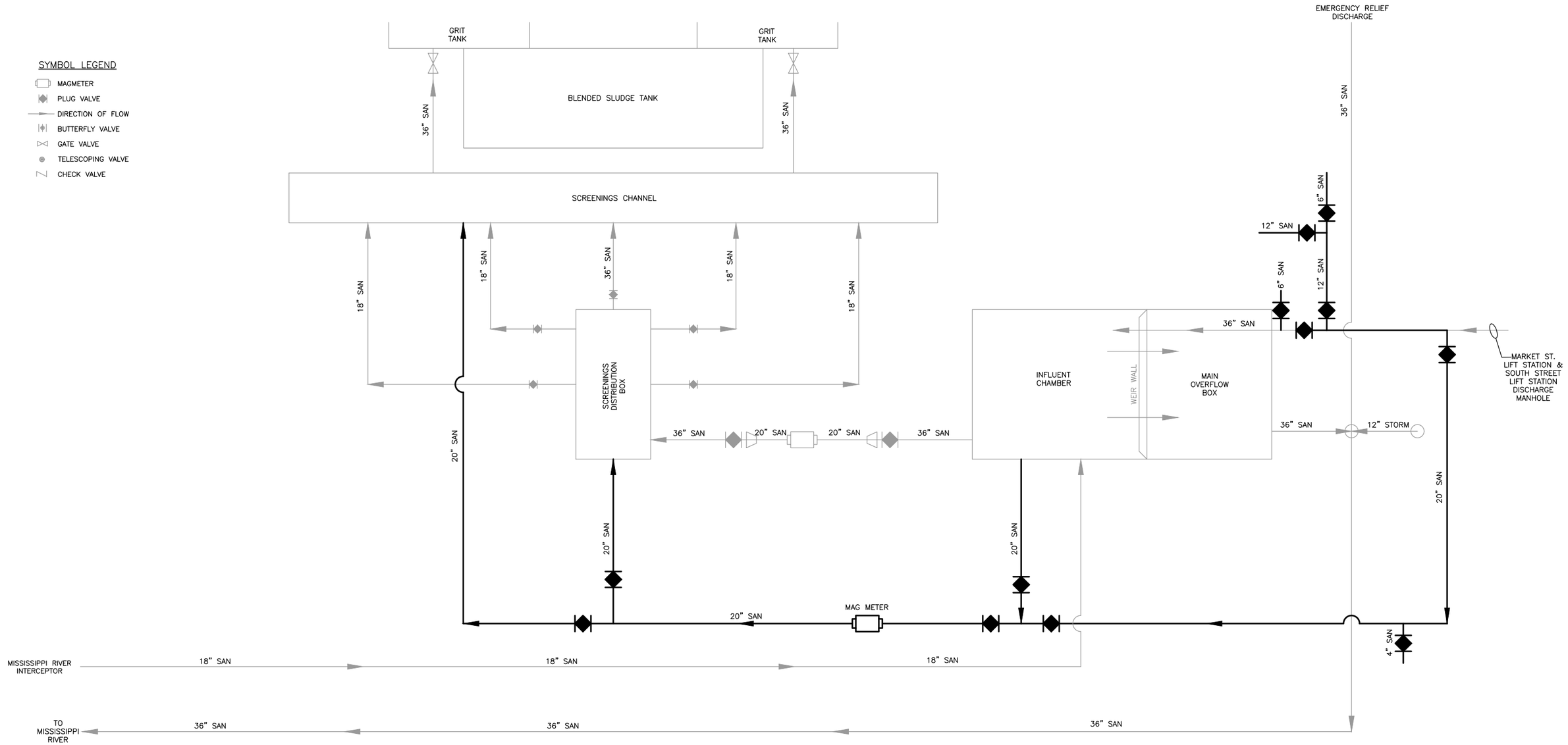

1 HEADWORKS PROCESS SCHEMATIC
NTS

NOTE:

EXISTING FLOW DIAGRAM BASED ON CLIENT PROVIDED DRAWINGS. CONTRACTOR SHALL FIELD VERIFY CONDITIONS PRIOR TO BIDDING AND CONSTRUCTION.

12/19/2025 RECORD DRAWINGS

DRAWN BY: JMM	JOB DATE: 2023	BAR IS ONE INCH ON OFFICIAL DRAWINGS. 0 1"	
APPROVED: MJW	JOB NUMBER: 220608	IF NOT ONE INCH, ADJUST SCALE ACCORDINGLY.	
CAD DATE: 12/18/2025 11:39:40 PM			
CAD FILE: J:\2022\220608\CAD\Dwgs\G\G101 HEADWORKS PROCESS FLOW DIAGRAM.dwg			

NO.	DATE	BY	REVISION DESCRIPTION

HRGreen.com
HRGreen

REDUNDANT INFLUENT LINE
WASTEWATER TREATMENT FACILITY
BURLINGTON, IOWA

GENERAL
HEADWORKS PROCESS FLOW DIAGRAM

SHEET NO.
G101

Xrefs: xg-1-dh01

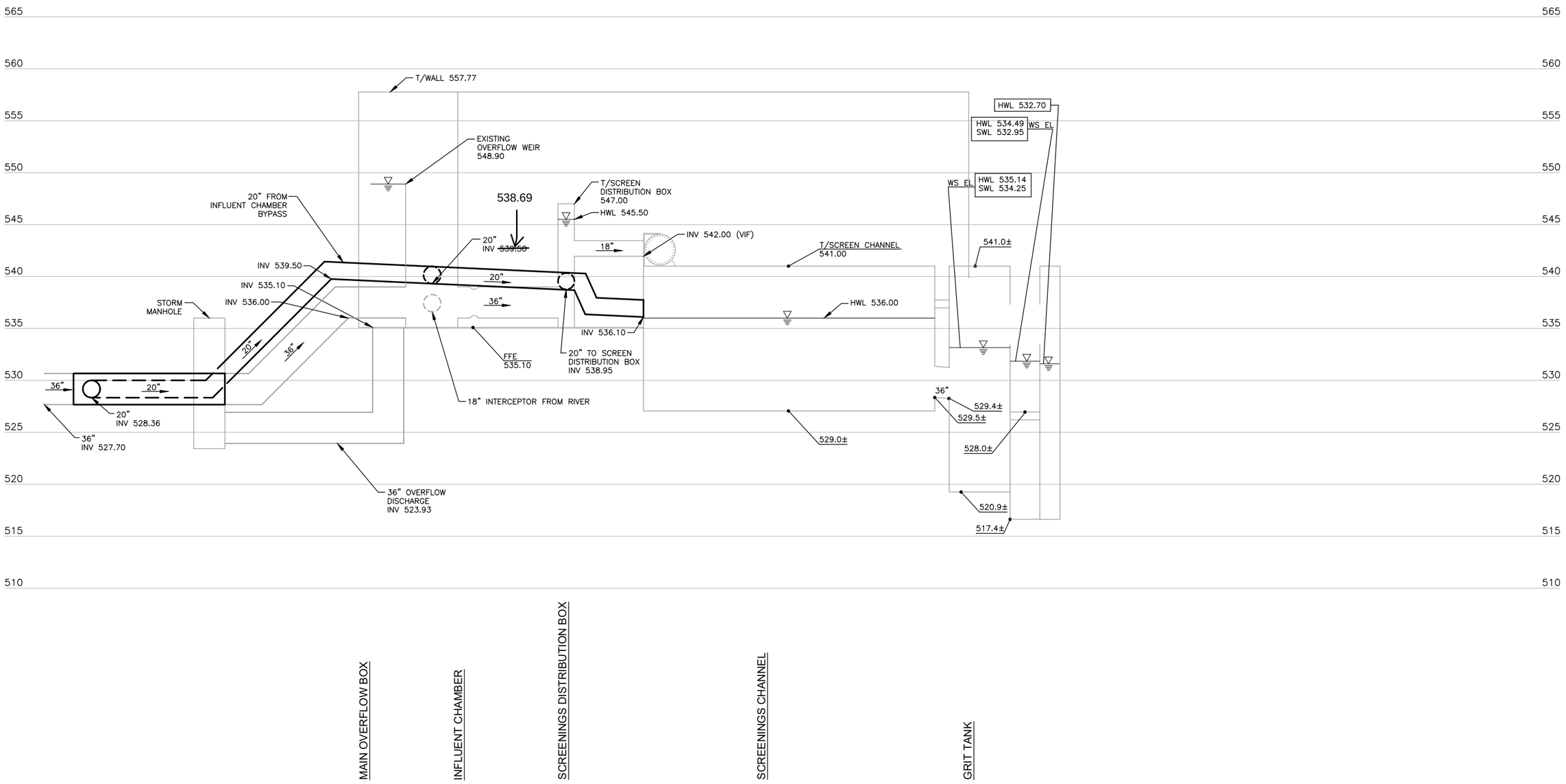

NOTE: USGS PLAN ELEVATION=511.45 RIVER STAGE

12/19/2025 RECORD DRAWINGS

Xrefs: xgt-1-dh01

DRAWN BY: JMM	JOB DATE: 2023	BAR IS ONE INCH ON OFFICIAL DRAWINGS. 0 1"	
APPROVED: MJW	JOB NUMBER: 220608	IF NOT ONE INCH, ADJUST SCALE ACCORDINGLY.	
CAD DATE: 12/18/2025 11:40:05 PM			
CAD FILE: J:\2022\220608\CAD\Dwgs\G\G102 EXISTING HYDRAULIC PROFILE.dwg			

NO.	DATE	BY	REVISION DESCRIPTION

HRGreen HRGreen.com

REDUNDANT INFLUENT LINE
WASTEWATER TREATMENT FACILITY
BURLINGTON, IOWA

GENERAL
HYDRAULIC PROFILE

SHEET NO.
G102

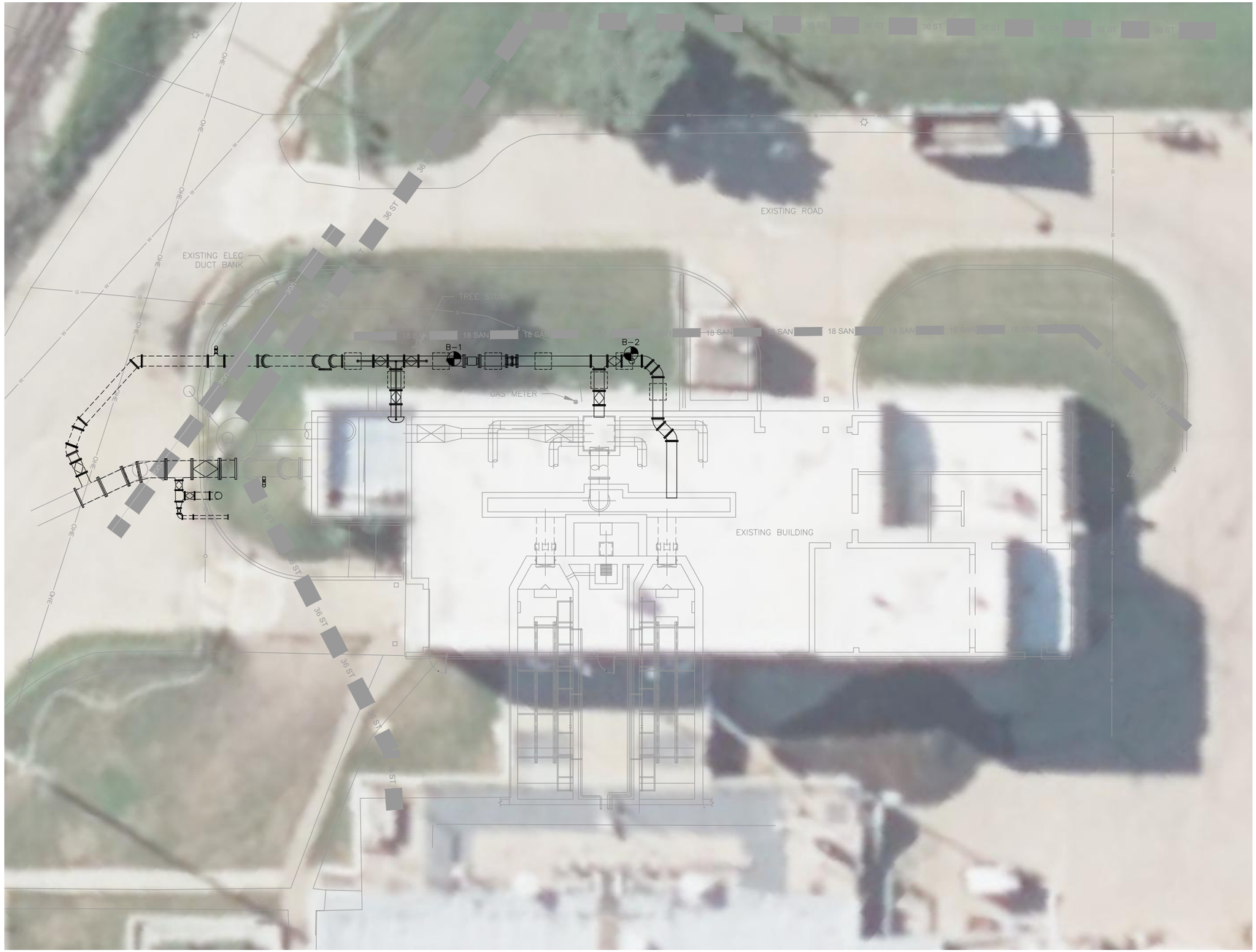

1 SITE LAYOUT
SCALE: 1"=10'
0 10'

NORTH

GENERAL NOTES:

1. "SCREENED" (LIGHT) DELINEATION SHOWN IN THIS SHEET DENOTES EXISTING CONDITION. "SCREENED" INFORMATION WAS TAKEN FROM PREVIOUS CONSTRUCTION DRAWINGS AND FIELD SURVEY, IS FOR REFERENCE ONLY, AND SHALL BE FIELD VERIFIED BY THE CONTRACTOR PRIOR TO ORDERING OF MATERIALS AND BEGINNING CONSTRUCTION. "BOLD" DELINEATION IS NEW WORK TO BE CONSTRUCTED UNDER THIS CONTRACT.
2. ALL INFORMATION PROVIDED WAS TAKEN FROM SURVEYS AND OR EXISTING PLANS. IT SHALL BE THE CONTRACTORS RESPONSIBILITY TO FIELD VERIFY ALL HORIZONTAL AND VERTICAL INFORMATION PRIOR TO BEGINNING ANY WORK.
3. ALL WORK INVOLVED IN THIS PROJECT SHALL BE CONSTRUCTED ON CITY OR STATE OWNED RIGHT-OF-WAY OR ON EASEMENTS OBTAINED BY THE CITY. NO MATERIALS, EXCAVATED MATERIAL, OR MATERIAL, OR EQUIPMENT SHALL BE STORED ON, PARKED ON, DEPOSITED ON, OR DRIVEN OVER ANY PRIVATE PROPERTY UNLESS WRITTEN AUTHORIZATION IS OBTAINED FROM THE PROPERTY OWNER BY THE CONTRACTOR. A COPY OF SUCH WRITTEN AGREEMENT SHALL BE PROVIDED TO THE CITY AND THE ENGINEER. UPON COMPLETION, CONTRACTOR SHALL PROVIDE TO THE CITY AND THE ENGINEER A WRITTEN RELEASE SIGNED BY THE PROPERTY OWNER.
4. DEWATERING MAY BE REQUIRED TO CONTROL GROUNDWATER IN EXCAVATION. CONTRACTOR SHALL BE RESPONSIBLE FOR CHOOSING METHOD OF GROUNDWATER CONTROL. IF CONTRACTOR CHOOSES TO USE DEEP OR WELL POINTS, THEY SHALL BE DESIGNED, INSTALLED AND OPERATED SO AS TO PREVENT REMOVAL OF ON-SITE MATERIALS. COST OF DEWATERING SHALL BE INCIDENTAL TO THE PROJECT AND SHALL NOT BE PAID FOR AS EXTRA WORK. CONTRACTOR SHALL OBTAIN AND PAY FOR ALL DEWATERING AND DISCHARGE FEE.
5. WASTE SITES: IT SHALL BE THE CONTRACTOR'S RESPONSIBILITY TO PROVIDE WASTE AREAS OR DISPOSAL SITES FOR EXCESS MATERIAL (EXCAVATED MATERIAL, BROKEN CONCRETE, MANHOLES, OR REMOVED SECTIONS OF STORM SEWER) WHICH IS NOT DESIRABLE TO BE INCORPORATED INTO THE WORK INVOLVED ON THIS PROJECT. NO PAYMENT FOR OVERHAUL WILL BE ALLOWED FOR MATERIAL HAULED TO THESE SITES.
6. SEE SPECIFICATION SECTION 01 1000 FOR CONSTRUCTION SEQUENCING. CONTRACTOR SHALL COORDINATE WITH OWNER PRIOR TO ANY SHUTDOWNS NECESSARY FOR CONSTRUCTION. COMPLIANCE WITH NPDES EFFLUENT LIMITS SHALL BE MAINTAINED THROUGHOUT CONSTRUCTION.
7. CONTRACTOR SHALL COORDINATE WITH OWNER TO ESTABLISH CONSTRUCTION STAGING AND STORAGE AREAS.
8. OWNER IS NOT RESPONSIBLE FOR SECURED/UNSECURED STORED MATERIALS STORED ON SITE.
9. THE EXTENT OF CONSTRUCTION IS ASSUMED TO BE LESS THAN 1 ACRE AND A SWPPP IS THEREFORE NOT REQUIRED. CONTRACTOR IS RESPONSIBLE FOR PREPARATION AND MANAGEMENT OF A SWPPP IF THE DISTURBED CONSTRUCTION AREA IS GREATER THAN 1 ACRE.
10. CONTRACTOR IS RESPONSIBLE FOR MAINTAINING ACCESS TO SITE, INCLUDING SNOW REMOVAL.
11. CONTRACTORS TO COORDINATE WITH OWNER FOR ACCESS AREA.
12. ALL HORIZONTAL AND VERTICAL CONTROL (BENCHMARKS) AS WELL AS DETAILED CONSTRUCTION STAKING SHALL BE PROVIDED BY THE CONTRACTOR.
13. CONTRACTOR SHALL MAINTAIN ACCESS TO HEADWORKS BUILDING AND INTERIOR COMPONENTS FOR OWNER THROUGHOUT CONSTRUCTION.
14. CONTRACTOR SHALL KEEP STREETS RELATIVELY FREE OF DEBRIS AND DIRT THROUGHOUT CONSTRUCTION.
15. ALL GRASS AREAS DISTURBED DURING CONSTRUCTION SHALL BE SEEDED PER SUDAS 9010 USING THE HYDROSEEDING METHOD. MOWED ARES SHALL RECEIVE SEED MIX TYPE 1.
16. CONTRACTOR IS RESPONSIBLE FOR PROTECTING EXISTING UTILITIES. THE UGE SHOWN IS A CONDUIT ABOVE A CONCRETE DUCT BANK. POTHOLING SHOWED THE 2" CONDUIT T/PIPE IS 531.84 AND T/ DUCT BANK IS 531.5. CONTRACTOR TO FIELD VERIFY PRIOR TO CONSTRUCTION.
17. SEE SPECIFICATIONS FOR SOIL BORING INFORMATION.
18. FOLLOW IOWA DNR REQUIREMENTS FOR DEMOLISHING OR DRILLING INTO STRUCTURES. CONTRACTOR IS RESPONSIBLE FOR ASBESTOS TESTING PRIOR TO DEMOLISHING OR DRILLING INTO ANY STRUCTURES, INCLUDING MANDATORY NOTICE TO IOWA DNR FOR DEMOLITION ACTIVITIES. TESTING WORK INCLUDES EXCAVATING BELOW GRADE TO EXPOSE THE EXTERIOR OF STRUCTURES SO AN ASBESTOS INSPECTOR CAN OBSERVE AND TEST, IF NECESSARY, FOR ASBESTOS CONTAINING COATINGS OR FINISHES. CONTRACTOR IS RESPONSIBLE FOR HIRING A STATE CERTIFIED ASBESTOS INSPECTOR TO PERFORM ALL REQUIRED TESTING AND ANALYSIS, THE COSTS OF ANY TESTING THAT IS NECESSARY, AND SUBMITTING A DEMOLITION NOTICE AND FEE TO THE IOWA DNR. IF ASBESTOS CONTAINING MATERIALS ARE FOUND, NOTIFY THE ENGINEER AND OWNER IMMEDIATELY. THE CONTRACTOR IS NOT RESPONSIBLE FOR ASBESTOS REMOVAL IF ASBESTOS IS FOUND, BUT MAY BE REQUESTED TO ENGAGE A CERTIFIED REMOVAL CONTRACTOR AS AN ADDITIONAL OWNER'S COST. A SAMPLE DEMOLITION PERMIT IS ATTACHED IN THE SPECIFICATIONS.

CONTROL AND BENCHMARKS

Point #	Northing	Easting	Elevation	Description
4	300568.37	2305255.14	532.39	CP 4 5/8RB W/ CAP

12/19/2025 RECORD DRAWINGS

DRAWN BY: JMM JOB DATE: 2023
APPROVED: MJW JOB NUMBER: 220608
CAD DATE: 12/18/2025 11:40:57 PM
CAD FILE: J:\2022\220608\CAD\Dwgs\C\C101 EX SITE LAYOUT & SURVEY CONTROLS.dwg

BAR IS ONE INCH ON OFFICIAL DRAWINGS. 0 1"
IF NOT ONE INCH, ADJUST SCALE ACCORDINGLY.

NO.	DATE	BY	REVISION DESCRIPTION

HRGreen.com
HRGreen

REDUNDANT INFLUENT LINE
WASTEWATER TREATMENT FACILITY
BURLINGTON, IOWA

CIVIL
SITE LAYOUT

SHEET NO.
C101

Xrefs: xg-1-dh01; xV-Survey-adjusted; xc-0-san; XSX-0-P00 reference

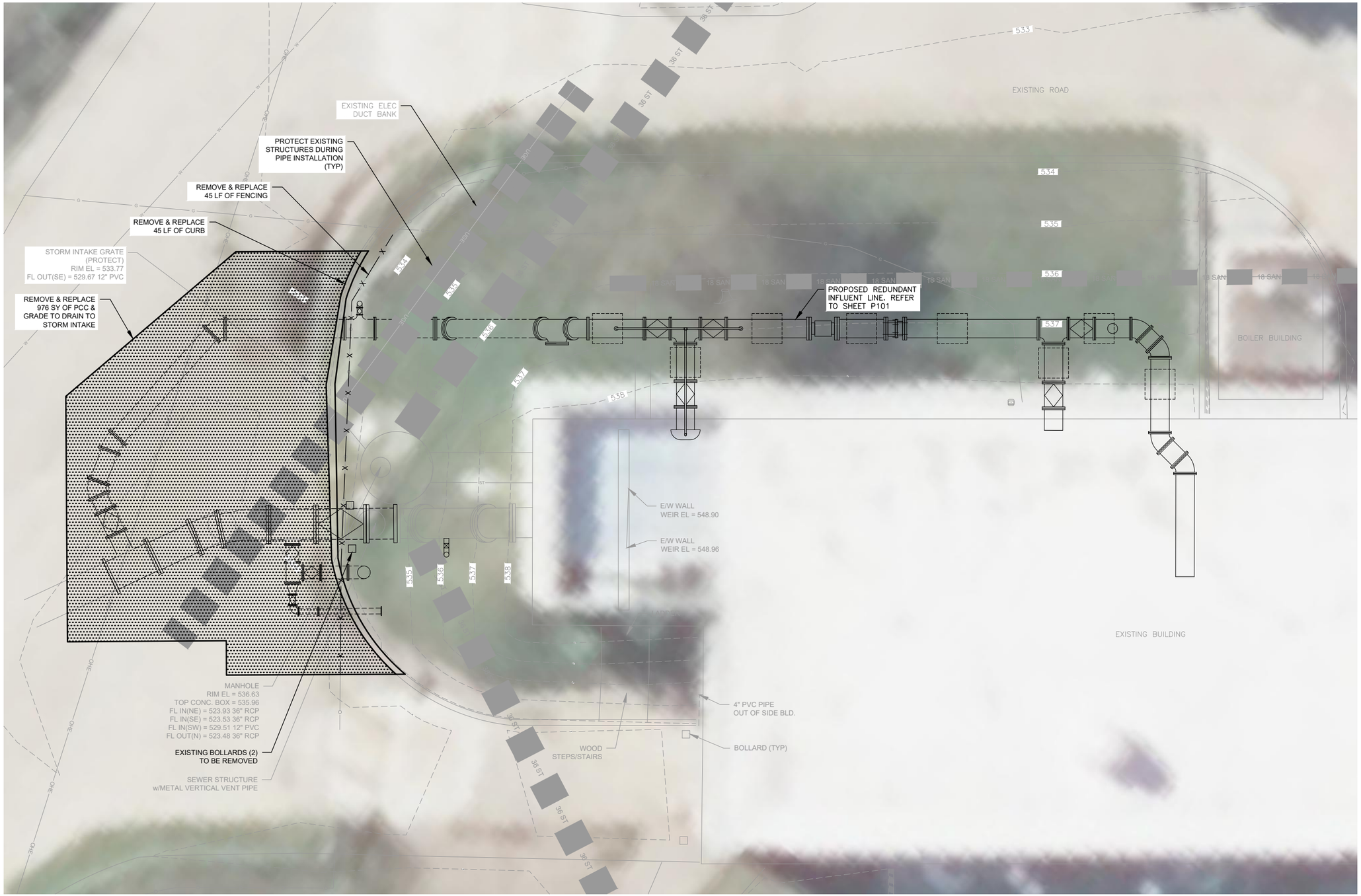

NOTES:

1. ANY ASSOCIATED BYPASS PUMPING TO BE PROVIDED BY OWNER. COORDINATE PUMPING WITH OWNER.
2. ALL BURIED PIPING SHALL BE INSTALLED TO A MINIMUM BURIED DEPTH OF 5'-0" UNLESS NOTED OTHERWISE. CONTRACTOR SHALL PROVIDE UNDERGROUND INSULATION IF REQUIRED BURY DEPTH CANNOT BE ACHIEVED, SEE DETAIL 1/C501.
3. MAINTAIN 5' HORIZONTAL SEPARATION BETWEEN STORM AND SANITARY PER SUDAS.
4. PAVEMENT AND CURB REMOVAL AND REPLACEMENT SHALL BE PER SUDAS. SAWCUT ALONG EXISTING PCC PAVEMENT. ASSUME EXISTING PAVEMENT IS 9" THICK.
5. REMOVE EXISTING BOLLARDS AS SHOWN.
6. REMOVE AND REPLACE 6' CHAIN LINK FENCE PER SUDAS.
7. CONTRACTOR TO PROTECT EXISTING UTILITIES.
8. ANY ASSOCIATED DEWATERING IS TO BE PROVIDED BY CONTRACTOR AT NO ADDITIONAL COST.
9. CONTRACTOR SHALL COORDINATE WITH ENGINEER AND OWNER FOR QUANTITY AND LOCATION OF NEW BOLLARDS. BOLLARDS SHALL BE INSTALLED PER 1/C501.

1 CIVIL PLAN
SCALE: 1"=5'
0 5'

NORTH

12/19/2025 RECORD DRAWINGS

DRAWN BY: JMM JOB DATE: 2023
APPROVED: MJW JOB NUMBER: 220608
CAD DATE: 12/18/2025 11:41:58 PM
CAD FILE: J:\2022\220608\CAD\Dwgs\C\C102 GRADING AND PAVING PLAN.dwg

BAR IS ONE INCH ON OFFICIAL DRAWINGS. 0 1"
IF NOT ONE INCH, ADJUST SCALE ACCORDINGLY.

NO.	DATE	BY	REVISION DESCRIPTION

HRGreen.com
HRGreen

REDUNDANT INFLUENT LINE
WASTEWATER TREATMENT FACILITY
BURLINGTON, IOWA

CIVIL
CIVIL PLAN

SHEET NO.
C102

Xrefs: xg-I-dn01; xl-Survey-adjusted; xc-O-asn; XSX-O-P00 reference; xc-O-paving

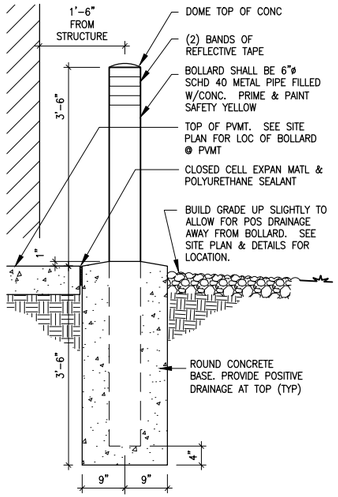

NOTE: BOLLARD MATERIAL WAS PROVIDED.
CITY SHALL INSTALL BOLLARDS AS NEEDED.

1 TYPICAL BOLLARD DETAIL

SCALE: NONE

12/19/2025 RECORD DRAWINGS

DRAWN BY:	JMM	JOB DATE:	2023
APPROVED:	MJW	JOB NUMBER:	220608
CAD DATE:	12/18/2025 11:55:17 PM		
CAD FILE:	J:\2022\220608\CAD\Dwgs\C\C501 DETAILS.dwg		

BAR IS ONE INCH ON OFFICIAL DRAWINGS.
0 1"
IF NOT ONE INCH, ADJUST SCALE ACCORDINGLY.

NO.	DATE	BY	REVISION DESCRIPTION

HRGreen.com
HRGreen

REDUNDANT INFLUENT LINE
WASTEWATER TREATMENT FACILITY
BURLINGTON, IOWA

CIVIL
DETAILS

SHEET NO.
C501

Xrefs: xg1-1-dh01; xc-0-d01

DESIGN CRITERIA

BUILDING CODE

- 2021 INTERNATIONAL BUILDING CODE
  AMERICAN CONCRETE INSTITUTE BUILDING CODE REQUIREMENTS FOR STRUCTURAL CONCRETE (ACI 318-19)
  AMERICAN CONCRETE INSTITUTE BUILDING CODE REQUIREMENTS FOR ENVIRONMENTAL CONCRETE STRUCTURES (ACI 318-20)
  AMERICAN INSTITUTE OF STEEL CONSTRUCTION MANUAL 13TH EDITION

LATERAL DESIGN LOADING

SEISMIC:
ACCELERATION VALUES:
Ss = 0.138 — SEISMIC DESIGN CATEGORY: B
S1 = 0.067 — DESIGN BASE SHEAR = 0.05W
SOIL SITE CLASS: C — SEISMIC RESP COEF., Cs = 0.053
IMPORTANCE FACTOR, I: 1.25 — ANALYSIS: EQUIVALENT LATERAL FORCE
SEISMIC DESIGN PARAMETERS: Sds = 0.110 / Sd1 = 0.076

WIND:
BASIC WIND SPEED: 108 MPH
WIND EXPOSURE: C
WIND IMPORTANCE FACTOR: 1:15

GEOTECHNICAL CONDITIONS

1. FOOTING DESIGN DEPICTED HERIN BASED UPON DATA REPORTED IN REPORT BY GEOTECHNICS, REPORT NO.1 0-1113.

CONCRETE:

1. DESIGN SHALL CONFORM TO THE LATEST BUILDING CODE REQUIREMENTS FOR STRUCTURAL CONCRETE (ACI-318)
2. ALL REINFORCING BARS SHALL CONFORM TO ASTM A-615, GRADE 60, ARRANGEMENT AND DETAILS OF REINFORCING STEEL, INCLUDING BAR SUPPORTS AND SPACERS, SHALL BE IN ACCORDANCE WITH THE LATEST ACI DETAILING MANUAL, UNLESS NOTED OTHERWISE.
3. ALL EXPOSED EDGES OF SLABS SHALL BE CHAMFERED 3/4".

REINFORCING LAP SPLICE TABLE - 4,000 PSI CONCRETE						
	CONDITION 1		CONDITION 2		CONDITION 3	HOOKS
BAR SIZE	CLEAR COVER >= 2 DIA. AND C-TO-C SPACING >= 5 DIA.		CLEAR COVER >= 1 DIA. AND C-TO-C SPACING >= 3 DIA.			STD 90 DEGREE HOOK LENGTH
	TOP *	OTHER	TOP *	OTHER	ALL BARS	
#3	1' - 4"	1' - 4"	2' - 0"	1' - 6"	SEE NOTE 3	0' - 6"
#4	1' - 7"	1' - 4"	2' - 8"	2' - 1"		0' - 8"
#5	2' - 0"	1' - 6"	3' - 4"	2' - 8"		0' - 10"
#6	2' - 6"	1' - 10"	4' - 0"	3' - 1"		1' - 0"
#7	3' - 6"	2' - 9"	5' - 10"	4' - 7"		1' - 2"
#8	4' - 0"	3' - 1"	6' - 8"	5' - 2"		1' - 4"
#9	4' - 6"	3' - 6"	7' - 7"	5' - 10"		1' - 7"
#10	5' - 1"	3' - 11"	8' - 6"	6' - 6"		1' - 10"
#11	5' - 8"	4' - 4"	9' - 5"	7' - 4"		2' - 0"

DETAIL NOTES:
1. BAR COVER AND SPACING MUST BOTH MEET THE CRITERIA OF CONDITION 1 OR 2 IN ORDER TO USE THAT PARTICULAR LAP LENGTH.
2. TOP BARS SHALL BE DEFINED AS ANY HORIZONTAL BARS PLACED SUCH THAT MORE THAN 12" OF FRESH CONCRETE IS CAST IN THE MEMBER BELOW THE BAR IN ANY SINGLE POUR. HORIZONTAL WALL BARS ARE CONSIDERED TOP BARS.
3. FOR BARS THAT DO NOT SATISFY EITHER CONDITION, LAP LENGTH SHALL BE THE LENGTH FROM THE APPROPRIATE CATEGORY ("TOP" OR "OTHER") OF CONDITION 2 MULTIPLIED BY 1.5.
4. FOR EPOXY-COATED BARS, MULTIPLY FINAL LAP LENGTH BY 1.5.

1 CONCRETE REINFORCING LAP SPICE TABLE
SCALE: NONE

CONCRETE MATERIAL SCHEDULE	
PROPERTIES/MATERIALS \ PROJECT USE	MIX 1 ENVIRONMENTAL STRUCTURES
COMPRESSIVE STRENGTH - MINIMUM	4,500 psi
PORTLAND CEMENT - ASTM C150	TYPE I OR TYPE II
FLYASH - ASTM C618	15% MAX
AGGREGATE - COARSE - ASTM C33	1" MAX
AIR ENTRAINMENT - ASTM C260	6% ± 1%
SUPER PLASTICIZER - ASTM C494	(OPTIONAL) TYPE F
WATER TO CEMENT RATIO - MAXIMUM	0.42 MAX
SYNTHETIC FIBERS	FLATWORK AND TOPPING SLABS
SLUMP	3" ± 1"
WATERPROOFING	AS REQ'D, SEE SPEC

DETAIL NOTES:
1. ALL CONCRETE IS MIX 1 UNLESS NOTED OTHERWISE.
2. TOPPING SLABS SHALL BE 2" MIN THICKNESS, MIX 1, BUT WITH MAX 1/2" AGGREGATE.
3. LIMIT AIR CONTENT OF STEEL-TROWELED FLOORS TO 3% MAX.

2 CONCRETE MATERIAL SCHEDULE
SCALE: NONE

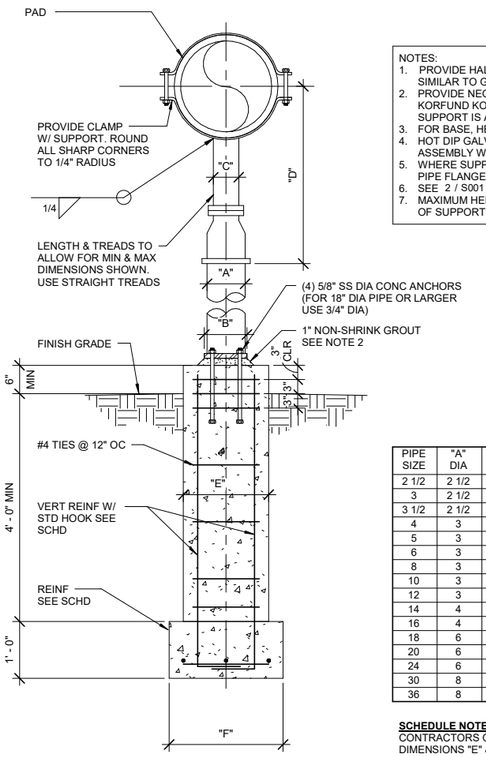

NOTES:
1. PROVIDE HALF ROUND RIGID INSULATION & INSULATION PROTECTION SHIELD, SIMILAR TO GRINNELL-FIG 167 OR ELCEN FIG 219, WHEN PIPING IS INSULATED.
2. PROVIDE NEOPRENE WAFFLE ISOLATION PAD SIMILAR TO MASON TYPE "W" OR KORFUND KORPAD 40, UNDER SUPPORT FOOT WHEN PIPING IS ISOLATED OR SUPPORT IS ADJACENT TO EQUIPMENT.
3. FOR BASE, HEIGHT AND FLANGE DIMENSIONS, SEE TABLE BELOW.
4. HOT DIP GALVANIZE ASSEMBLY AFTER FABRICATION. PROVIDE STAINLESS STEEL ASSEMBLY WHEN PIPE SUPPORT IS LOCATED INSIDE THE BUILDING.
5. WHERE SUPPORT IS TO BE INSTALLED ON CONCRETE SLAB, ATTACH STANDARD PIPE FLANGE TO CONCRETE WITH CONCRETE ANCHORS.
6. SEE 2 / S001 FOR CONCRETE MIX 1.
7. MAXIMUM HEIGHT OF PIPE STAND FROM TOP OF CONCRETE TO CENTERLINE OF SUPPORTED PIPE SHALL BE 4'-0".

PIPE SIZE	"A" DIA	"B" DIA	"C" DIA	"D" MIN	"D" MAX	"E" DIA	"F" DIA (FEET)	VERT REINF	MAX SPA (FEET)	FOOTING REINFORCING
2 1/2	2 1/2	9	1 1/2	8	13	18	2	(5) #5	8	#5 @ 9" OC T & B
3	2 1/2	9	1 1/2	8 1/4	13 1/4	18	2	(5) #5	10	#5 @ 9" OC T & B
3 1/2	2 1/2	9	1 1/2	8 1/2	13 1/2	18	2	(5) #5	10	#5 @ 9" OC T & B
4	3	9	2 1/2	9 1/4	14	18	2	(5) #5	10	#5 @ 9" OC T & B
5	3	9	2 1/2	10	14 3/4	18	2	(5) #5	12	#5 @ 9" OC T & B
6	3	9	2 1/2	10 1/2	15 1/4	18	2	(5) #5	12	#5 @ 9" OC T & B
8	3	9	2 1/2	11 3/4	16 1/2	18	2	(5) #5	12	#5 @ 9" OC T & B
10	3	9	2 1/2	13 1/2	18 1/4	18	2	(5) #5	14	#5 @ 9" OC T & B
12	3	9	2 1/2	15	19 3/4	18	2	(5) #5	14	#5 @ 9" OC T & B
14	4	11	2 1/2	16 1/4	20 3/4	20	2 1/2	(6) #5	14	#5 @ 9" OC T & B
16	4	11	3	17 3/4	22 1/4	20	2 1/2	(6) #5	16	#5 @ 9" OC T & B
18	6	13 1/2	3	19 1/2	24	24	3	(8) #5	16	#5 @ 9" OC T & B
20	6	13 1/2	3 1/2	21	25 1/2	24	3	(8) #5	16	#5 @ 9" OC T & B
24	6	13 1/2	4	23 3/4	28 1/4	24	3 1/2	(8) #5	16	#5 @ 9" OC T & B
30	8	16	6	24	29	36	4 1/2	(10) #5	16	#5 @ 9" OC T & B
36	8	16	6	24	29	36	5	(10) #5	16	#5 @ 9" OC T & B

SCHEDULE NOTE:
CONTRACTORS OPTION:
DIMENSIONS "E" & "F" MAY BE EITHER THE DIAMETER OR THE SIDE DIMENSION OF A SQUARE SECTION.

3 PIPE SUPPORT DETAIL
SCALE: 3/4" = 1'-0"

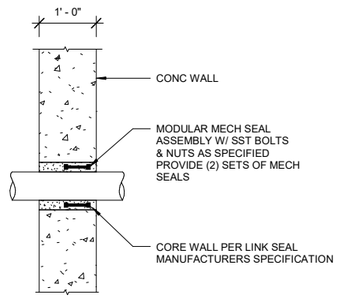

4 WALL PENETRATION SEAL DETAIL
SCALE: NTS

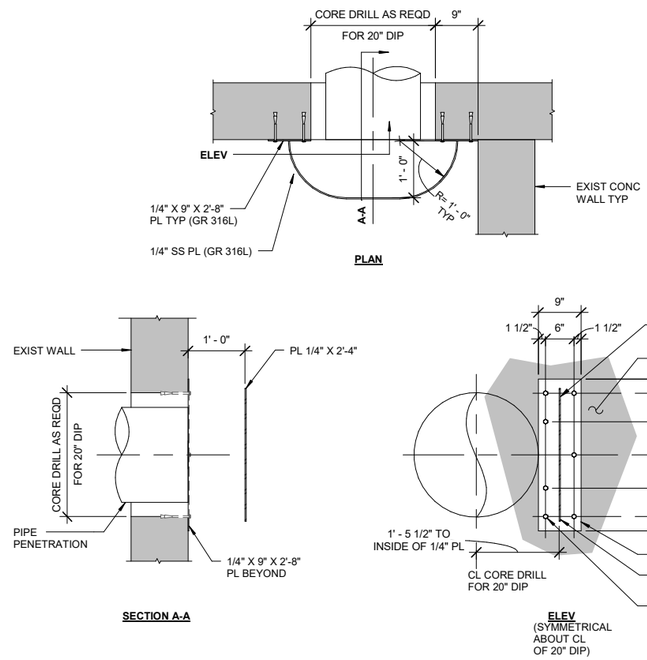

5 STAINLESS STEEL BAFFLE DETAIL
SCALE: 3/4" = 1'-0"

12/19/2025 RECORD DRAWINGS

FILE: C:\Users\jmccourt\Documents\220608_S_v21_jmccourt7.rvt
PLOTTED: 12/19/2025 8:52:00 AM

DRAWN BY:	MLM
APPROVED:	CAA
JOB DATE:	2023
JOB NUMBER:	220608

BAR IS ONE INCH ON OFFICIAL DRAWINGS
0 1"
IF NOT ONE INCH, ADJUST SCALE ACCORDINGLY

NO	DATE	BY	REVISION DESCRIPTION
	11/03/23		PERMIT SET

HRGreen.com

REDUNDANT INFLUENT LINE
WASTEWATER TREATMENT FACILITY
BURLINGTON, IOWA

STRUCTURAL

TYPICAL DETAILS

SHEET NO.
S001

GENERAL NOTES:
1. DESIGN LOAD FOR GRATING AND STAIR IS 100 PSF UNIFORM LOAD OR 300 LB CONCENTRATED LOAD.
2. ALUMINUM GRATING AND STAIR TREADS ARE RECT. BEARING BAR, 1 3/16" OC, SERRATED-SURFACE, WITH BANDED ENDS.
3. ALL MATERIAL ARE ALUMINUM, UNO.
4. STEEL ITEMS AND ANCHORAGE TO CONCRETE SHALL BE TYPE 316L STAINLESS STEEL.
5. SEPARATE ALUMINUM FROM CEMENTITIOUS OR DISSIMILAR MATERIALS PER DIVISION 5 SPECIFICATIONS.
6. ANODIZE RAILINGS PER DIVISION 5 SPECIFICATIONS.
7. ANCHORAGE TO CONCRETE MAY BE BY ADHESIVE ANCHOR, EXPANSION ANCHOR OR SCREW ANCHOR.

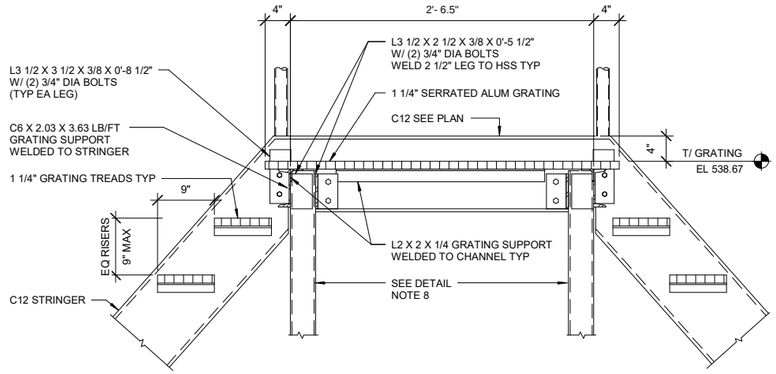

PLATFORM, RAILING AND STAIR NOTES:

1. ALL CHANNELS, ANGLES, HSS COLUMNS AND PLATES TO BE ALUMINUM.
2. SEE PLANS FOR ALL OTHER DIMENSIONS NOT SHOWN.
3. STAIRS ARE 3'-0" WIDE BACK TO BACK OF CHANNELS, UNO. STRINGERS AND PLATFORM CHANNELS ARE C12 X 3 X 7.4 LB/FT UNO ON PLANS.
4. ALL GRATING AND STAIR TREADS TO BE SERRATED ALUMINUM UNO.
5. 6" CHANNELS (WHERE INDICATED) ARE C6 X 2 X 3 LB/FT.
6. ALL CONNECTIONS ARE WELDED OR BOLTED WITH MIN (2) 3/4" DIA STAINLESS STEEL BOLTS.
7. PROVIDE 2 1/2 X 2 1/2 X 1/4 DIAG BRACING BETWEEN BOTTOM FLANGES OF STRINGERS FOR ALL HORIZ STAIR SPANS GREATER THAN 8'-0". APPLIES TO ALL STAIRS ON PROJECT.
8. HSS4 X 4 X 3/8 ALUMINUM COLUMN WITH BASE PLATE 1/2" X 9" X 0'-9" AND (4) 3/4" DIA ANCHORS WITH 1 " NON SHRINK GROUT.

1 TOP OF STAIR LANDING AND PLATFORM DETAIL
SCALE: 1" = 1'-0"

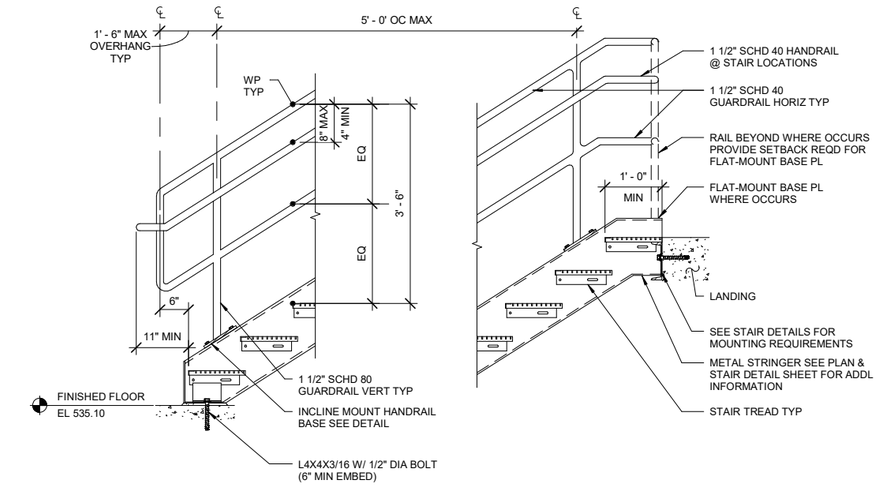

2 ALUMINUM STAIR RAIL (2 HORIZ) ELEVATION
SCALE: 3/4" = 1'-0"

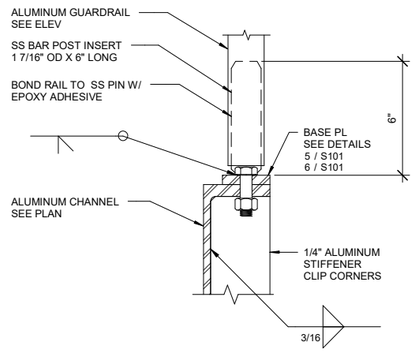

3 ALUMINUM @ ALUMINUM CHANNEL
SCALE: 3" = 1'-0"

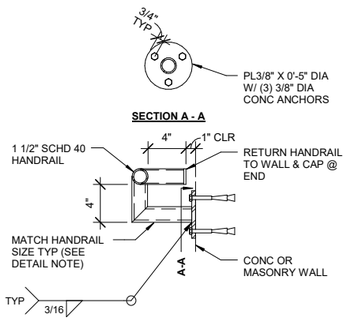

DETAIL NOTE
ONE THUS WITHIN 12" OF HANDRAIL ENDS AND SPACED AT NO MORE THAN 5'-0" ALONG HANDRAIL.

4 ALUMINUM HANDRAIL CONNECTION AT WALL
SCALE: 1 1/2" = 1'-0"

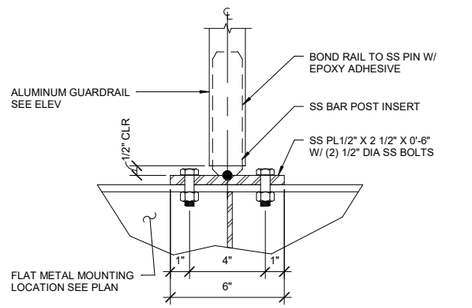

5 ALUMINUM FLAT MOUNT
SCALE: 3" = 1'-0"

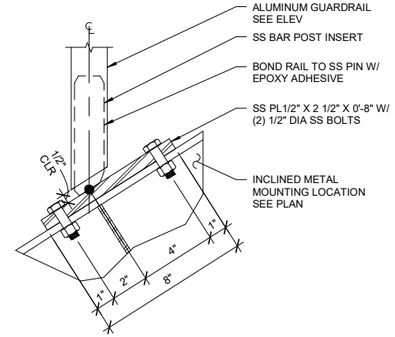

6 ALUMINUM INCLINED MOUNT
SCALE: 3" = 1'-0"

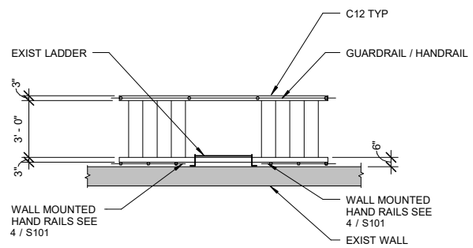

7 STAIR PLAN
SCALE: NTS

12/19/2025 RECORD DRAWINGS

DRAWN BY:	MLM
APPROVED:	CAA
JOB DATE:	2023
JOB NUMBER:	220608

BAR IS ONE INCH ON OFFICIAL DRAWINGS
0 1"
IF NOT ONE INCH, ADJUST SCALE ACCORDINGLY

NO	DATE	BY	REVISION DESCRIPTION
	11/03/23		PERMIT SET

HRGreen.com

REDUNDANT INFLUENT LINE
WASTEWATER TREATMENT FACILITY
BURLINGTON, IOWA

STRUCTURAL

PLATFORM AND STAIR DETAILS

SHEET NO.
S101

FILE: C:\Users\jmccourt\Documents\220608_S_v21_jmccourt7.rvt
PLOTTED: 12/19/2025 8:52:01 AM

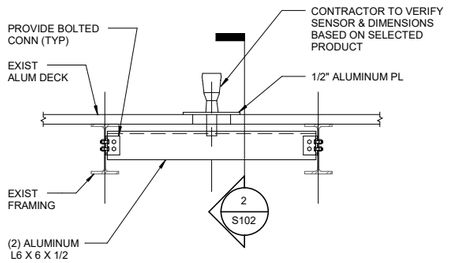

1 SENSOR FRAMING SECTION
SCALE: 3/4" = 1'-0"

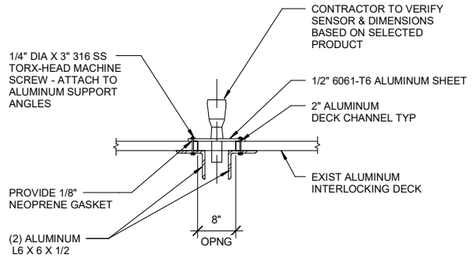

2 FRAMING SECTION
SCALE: 3/4" = 1'-0"

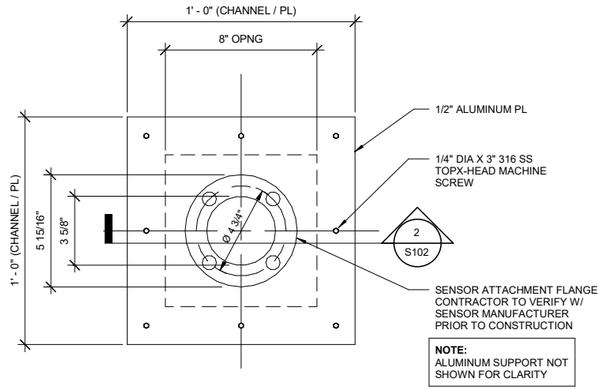

3 PLATE DETAIL
SCALE: 3" = 1'-0"

12/19/2025 RECORD DRAWINGS

FILE: C:\Users\jmccourt\Documents\220608_S_v21_jmccourt7.rvt
PLOTTED: 12/19/2025 8:52:01 AM

DRAWN BY: MLM
APPROVED: CAA
JOB DATE: 2023
JOB NUMBER: 220608

BAR IS ONE INCH ON OFFICIAL DRAWINGS
0 1"
IF NOT ONE INCH, ADJUST SCALE ACCORDINGLY

NO	DATE	BY	REVISION DESCRIPTION

HRGreen.com
HRGreen

REDUNDANT INFLUENT LINE
WASTEWATER TREATMENT FACILITY
BURLINGTON, IOWA

STRUCTURAL

SECTIONS AND DETAILS

SHEET NO.
S102

NOTES:

1. SEE SHEET P601 FOR VALVE AND FITTING INFORMATION.
2. REFER TO E-SHEETS AND SPECIFICATION 22 0533 FOR HEAT TRACING REQUIREMENTS.
3. BURIED DIP SHALL BE RESTRAINED JOINT.
4. ABOVE GRADE DIP SHALL BE FLANGED. SEE STRUCTURAL SHEETS FOR PIPE SUPPORTS.
5. CONTRACTOR TO VERIFY THE LOCATIONS OF PIPE SUPPORTS TO ENSURE THAT NO UTILITY CONFLICTS EXIST WITH PROPOSED LOCATIONS OF PIPE SUPPORT.

(X) SHEET P101 KEY NOTES

(1) EXTEND PIPING TO 4" BELOW GRADE. CAP WITH BLIND FLANGE AND INSTALL NEENAH R-1713 MARKED "SANITARY."

(2) INSTALL RJ CAP. MARK CAP WITH BURIED 4x4 POST EXTENDED JUST BELOW GRADE.

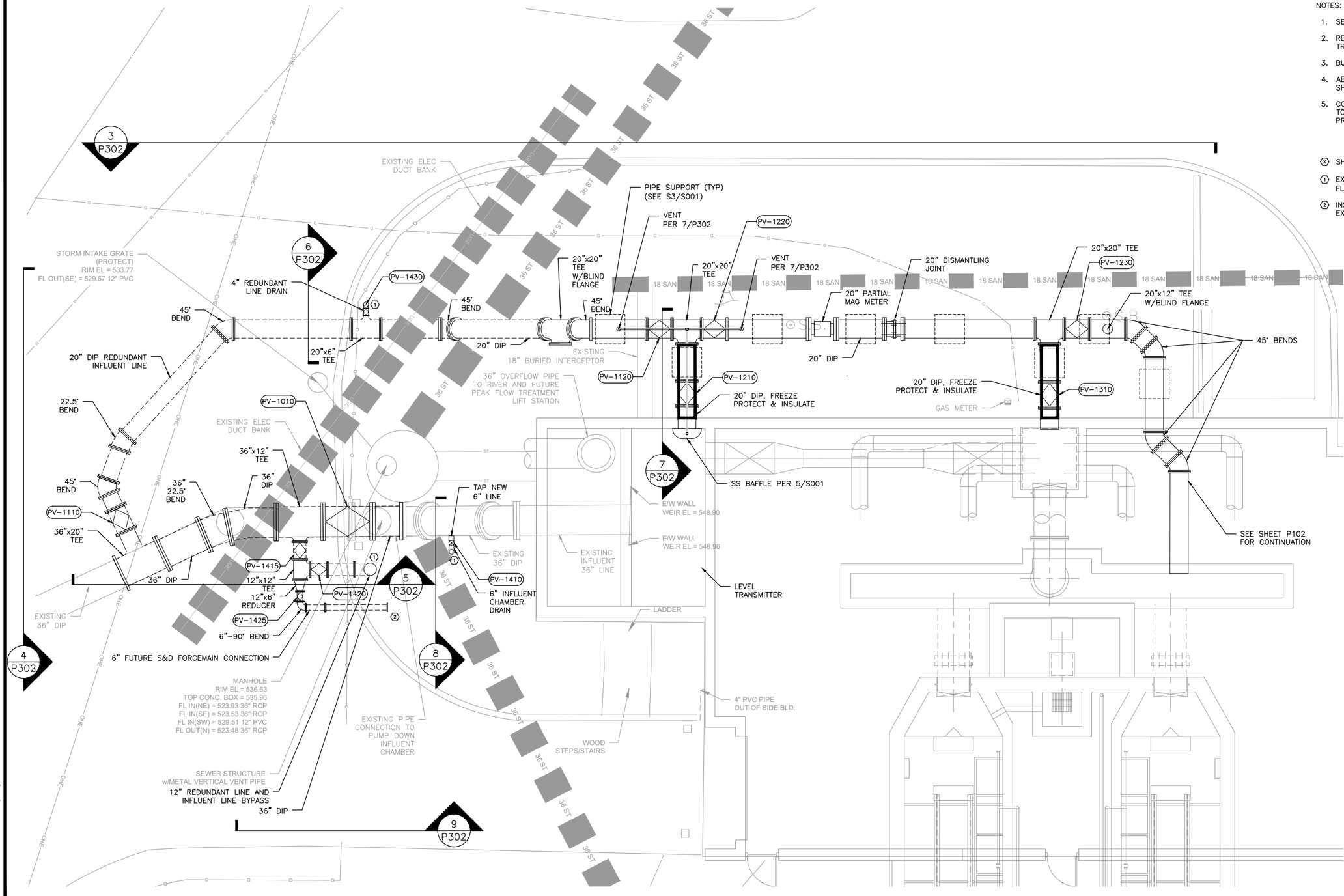

1 PLAN
SCALE: 1"=5'
0 5'

NORTH

12/19/2025 RECORD DRAWINGS

DRAWN BY: JMM	JOB DATE: 2023	BAR IS ONE INCH ON OFFICIAL DRAWINGS.	
APPROVED: MJW	JOB NUMBER: 220608	0 1"	
CAD DATE: 12/19/2025 7:52:57 AM		IF NOT ONE INCH, ADJUST SCALE ACCORDINGLY.	
CAD FILE: J:\2022\220608\CAD\Dwgs\P\P101 PROCESS PLAN.dwg			

NO.	DATE	BY	REVISION DESCRIPTION

HRGreen HRGreen.com

REDUNDANT INFLUENT LINE
WASTEWATER TREATMENT FACILITY
BURLINGTON, IOWA

PROCESS
INFLUENT PIPING – PROCESS PLAN

SHEET NO.
P101

Xrefs: xgt-1-dh01; xc-0-son; XSX-0-P00 reference; xv-Survey-adjusted; XE-1-P01

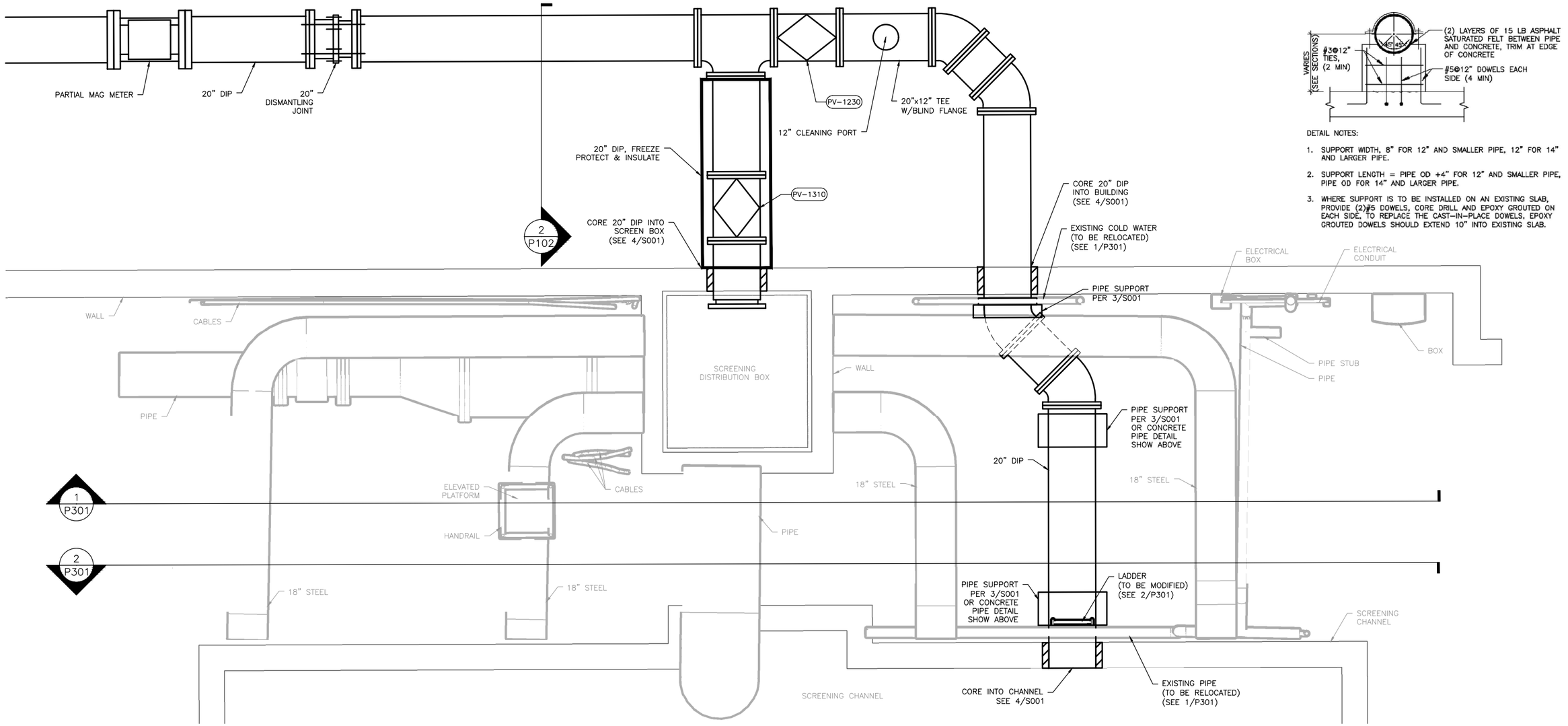

1 **PLAN**
SCALE: 1:2

NORTH

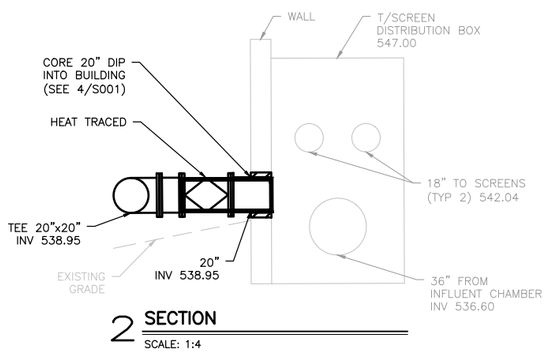

2 **SECTION**
SCALE: 1:4

DETAIL NOTES:

1. SUPPORT WIDTH, 8" FOR 12" AND SMALLER PIPE, 12" FOR 14" AND LARGER PIPE.
2. SUPPORT LENGTH = PIPE OD +4" FOR 12" AND SMALLER PIPE, PIPE OD FOR 14" AND LARGER PIPE.
3. WHERE SUPPORT IS TO BE INSTALLED ON AN EXISTING SLAB, PROVIDE (2)#5 DOWELS, CORE DRILL AND EPOXY GROUTED ON EACH SIDE, TO REPLACE THE CAST-IN-PLACE DOWELS, EPOXY GROUTED DOWELS SHOULD EXTEND 10" INTO EXISTING SLAB.

12/19/2025 RECORD DRAWINGS

DRAWN BY:	JMM	JOB DATE:	2023
APPROVED:	MJW	JOB NUMBER:	220608
CAD DATE:	12/19/2025 12:34:37 AM		
CAD FILE:	J:\2022\220608\CAD\Dwgs\P\P102.dwg		

BAR IS ONE INCH ON OFFICIAL DRAWINGS. 0 1" IF NOT ONE INCH, ADJUST SCALE ACCORDINGLY.

NO.	DATE	BY	REVISION DESCRIPTION

HRGreen.com
HRGreen

REDUNDANT INFLUENT LINE
WASTEWATER TREATMENT FACILITY
BURLINGTON, IOWA

PROCESS
INFLUENT PIPING – PROCESS ROOM

SHEET NO.
P102

Xrefs: xg|-1-dh01; 220608_PipingScan; xc-0-scn; XSX-0-P00 reference

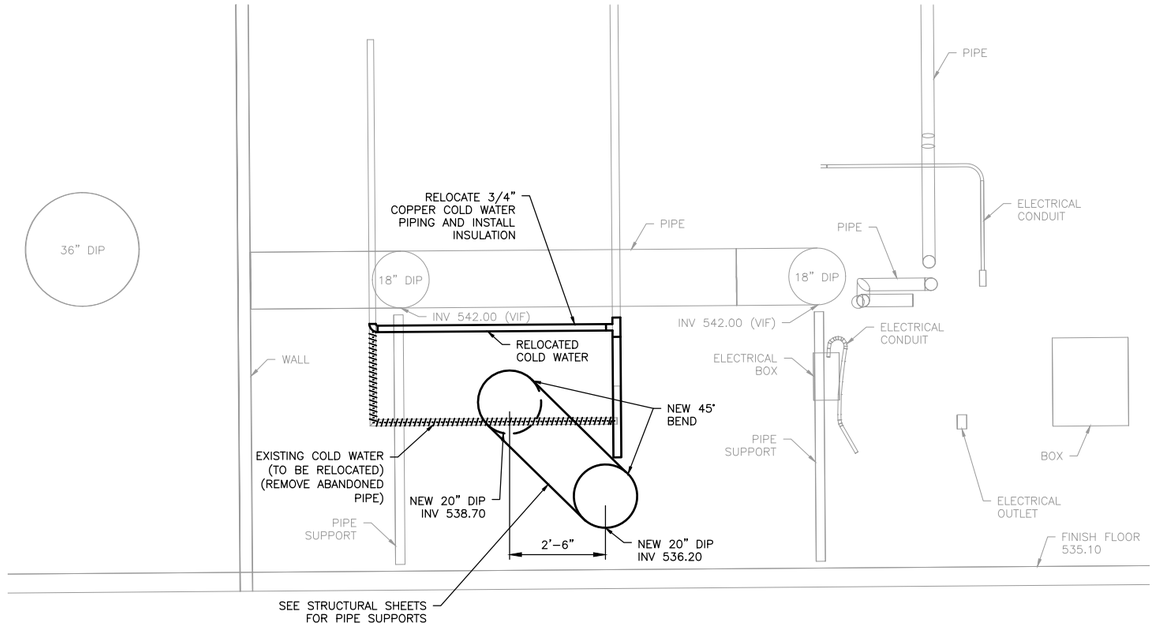

1 **SECTION**
SCALE: 1:2

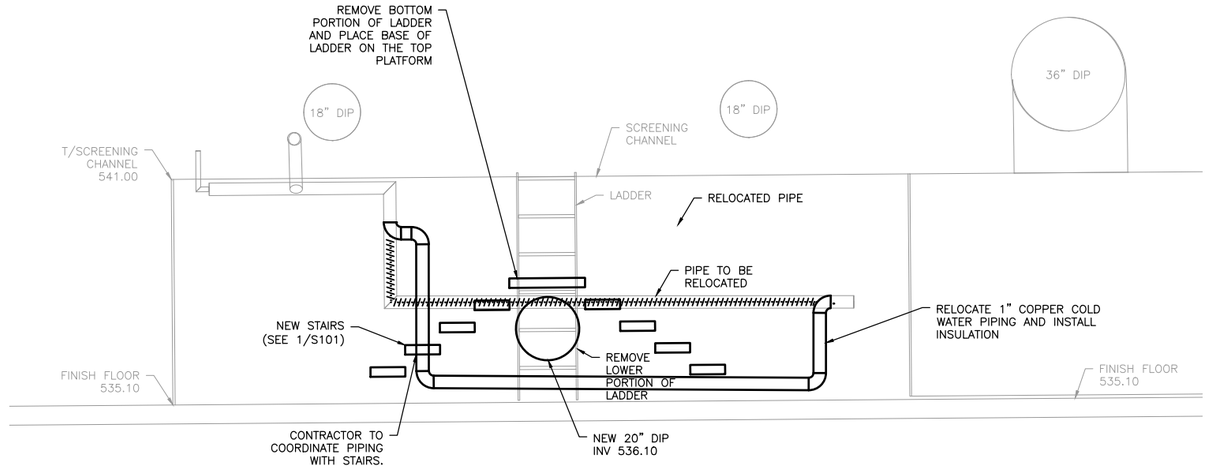

2 **SECTION**
SCALE: 1:2

12/19/2025 RECORD DRAWINGS

Xrefs: xgl-1-dh01; 220608_PipingScan

DRAWN BY:	JMM	JOB DATE:	2023
APPROVED:	MJW	JOB NUMBER:	220608
CAD DATE:	12/19/2025 12:42:43 AM		
CAD FILE:	J:\2022\220608\CAD\Dwgs\P\P301.dwg		

BAR IS ONE INCH ON OFFICIAL DRAWINGS. 0 1"
IF NOT ONE INCH, ADJUST SCALE ACCORDINGLY.

NO.	DATE	BY	REVISION DESCRIPTION

HRGreen.com
HRGreen

REDUNDANT INFLUENT LINE
WASTEWATER TREATMENT FACILITY
BURLINGTON, IOWA

PROCESS
INFLUENT PIPING – PROCESS SECTIONS

SHEET NO.
P301

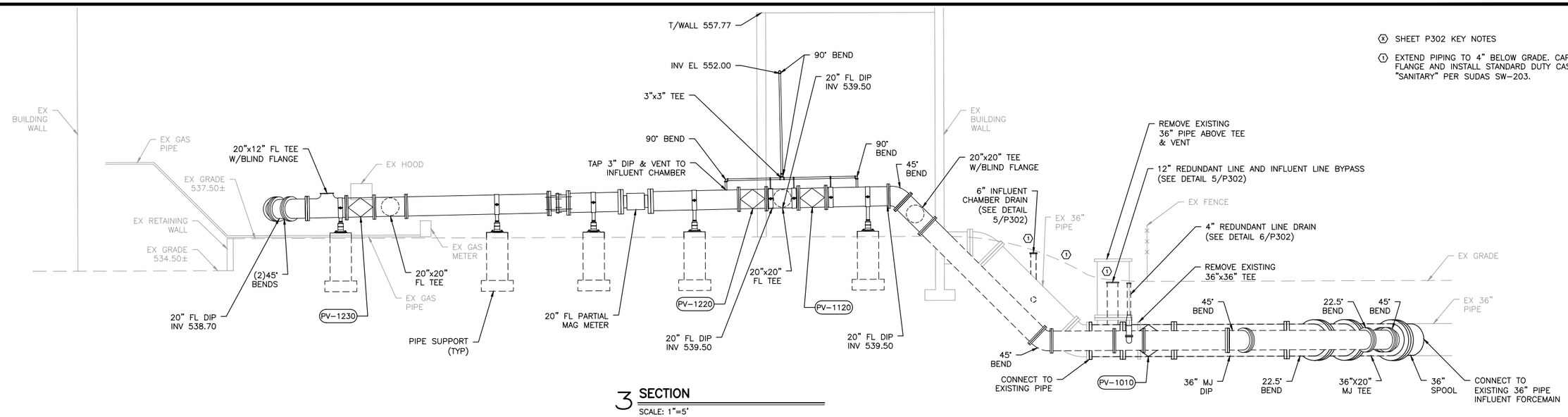

3 **SECTION**
SCALE: 1"=5'

X SHEET P302 KEY NOTES

1 EXTEND PIPING TO 4" BELOW GRADE. CAP WITH BLIND FLANGE AND INSTALL STANDARD DUTY CASTING MARKED "SANITARY" PER SUDAS SW-203.

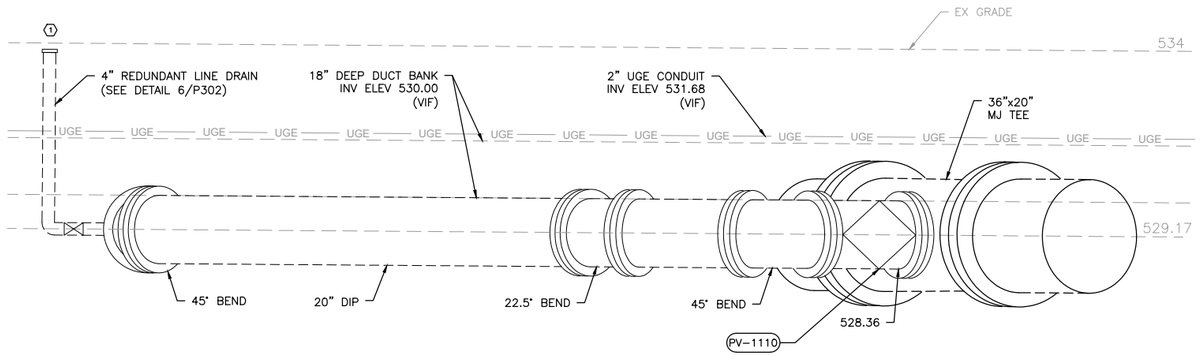

4 **SECTION**
SCALE: 1"=2'

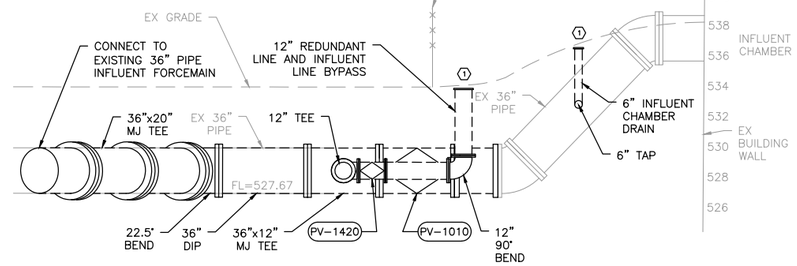

5 **SECTION**
SCALE: 1"=5'

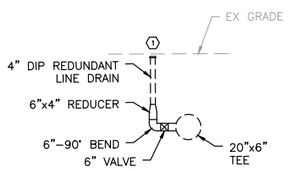

6 **SECTION**
SCALE: 1"=5'

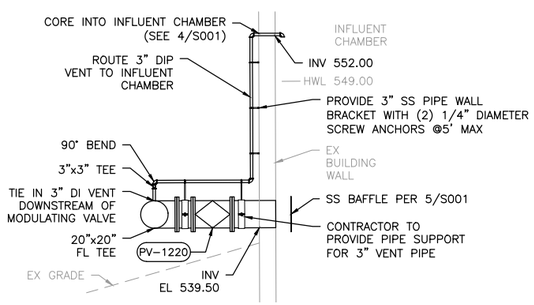

7 **SECTION**
SCALE: 1"=5'

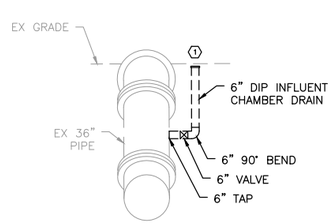

8 **SECTION**
SCALE: 1"=5'

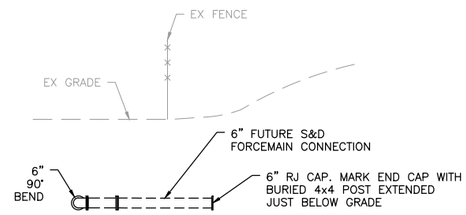

9 **SECTION**
SCALE: 1"=5'

12/19/2025 RECORD DRAWINGS

DRAWN BY:	JMM	JOB DATE:	2023
APPROVED:	MJW	JOB NUMBER:	220608
CAD DATE:	12/19/2025 7:53:27 AM		
CAD FILE:	J:\2022\220608\CAD\Dwgs\P\P302.dwg		

BAR IS ONE INCH ON OFFICIAL DRAWINGS. 0 1"
IF NOT ONE INCH, ADJUST SCALE ACCORDINGLY.

NO.	DATE	BY	REVISION DESCRIPTION

HRGreen.com
HRGreen

REDUNDANT INFLUENT LINE
WASTEWATER TREATMENT FACILITY
BURLINGTON, IOWA

PROCESS
INFLUENT PIPING – PROCESS SECTIONS

SHEET NO.
P302

Xrefs: xgt-1-db01_220608_PipingScan; xc-0-san; XSX-0-P00 reference

VALVE NO	LOCATION	SIZE	TYPE	OPERATION	SERVICE	NORMAL OPERATION	HIGH FLOWS INTO INFLUENT CHAMBER	BYPASSING INFLUENT CHAMBER TO SCREENING (3)	BYPASSING INFLUENT CHAMBER & SCREENS(3)	DESCRIPTION
PV-1010	OUTSIDE OF INFLUENT CHAMBER	36-INCH	PLUG VALVE	BURIED, 2-INCH SQ NUT	INFLUENT CHAMBER MAIN LINE	OPEN	OPEN	CLOSED	CLOSED	ONLY CLOSED IF BYPASSING THE INFLUENT CHAMBER
PV-1110	OUTSIDE OF INFLUENT CHAMBER	20-INCH	PLUG VALVE	BURIED, 2-INCH SQ NUT	REDUNDANT LINE INFLUENT CHAMBER BYPASS	CLOSED	CLOSED	OPEN	OPEN	ONLY OPEN WHEN BYPASSING THE INFLUENT CHAMBER
PV-1120	OUTSIDE OF INFLUENT CHAMBER	20-INCH	PLUG VALVE	NON BURIED, MANUAL HANDWHEEL	REDUNDANT LINE INFLUENT CHAMBER BYPASS	CLOSED	CLOSED	OPEN	OPEN	ONLY OPEN WHEN BYPASSING THE INFLUENT CHAMBER
PV-1210	OUTSIDE OF INFLUENT CHAMBER	20-INCH	PLUG VALVE	NON BURIED, ACTUATED, ELECT O/C	INFLUENT CHAMBER REDUNDANT LINE	CLOSED	OPEN (1)	CLOSED (2)	CLOSED (2)	OPENS W/ MODULATING VALVE WHEN INFLUENT CHAMBER REACHES HIGH WATER LEVEL
PV-1220	OUTSIDE OF INFLUENT CHAMBER	20-INCH	PLUG VALVE	NON BURIED, MODULATING, ELECT	INFLUENT CHAMBER REDUNDANT LINE	CLOSED	OPEN (1)	OPEN (1)	OPEN (1)	MODULATES FLOW FROM INFLUENT CHAMBER DURING HIGH WATER
PV-1230	OUTSIDE OF SCREEN BOX	20-INCH	PLUG VALVE	NON BURIED, MANUAL HANDWHEEL	INFLUENT CHAMBER REDUNDANT LINE TO SCREENING CHANNEL	OPEN	OPEN	CLOSED	OPEN (1)	OPENS TO SEND REDUDANT FLOW ABOVE THE SCREENING CAPACITY TO THE SCREENED CHANNEL
PV-1310	OUTSIDE OF SCREEN DISTRIBUTION BOX	20-INCH	PLUG VALVE	NON BURIED, MANUAL HANDWHEEL	INFLUENT CHAMBER REDUNDANT LINE TO SCREENING BOX	CLOSED	CLOSED	OPEN	CLOSED	OPENS TO SEND REDUDANT FLOW BELOW SCREENING CAPACITY TO THE SCREENING BOX
PV-1410	OUTSIDE OF INFLUENT CHAMBER	6-INCH	PLUG VALVE	BURIED, 2-INCH SQ NUT	INFLUENT CHAMBER DRAIN	CLOSED	CLOSED	CLOSED	CLOSED	ONLY OPEN WHEN PUMPING DOWN THE INFLUENT CHAMBER WHILE OFFLINE
PV-1415	OUTSIDE OF INFLUENT CHAMBER	12-INCH	PLUG VALVE	BURIED, 2-INCH SQ NUT	36" INFLUENT CONNECTION TO 12" BYPASS AND 6" S&D FORCEMAIN	OPEN (4)	OPEN (4)	OPEN (4)	OPEN (4)	ONLY OPEN IF OPENING VALVES PV-1420 OR PV-1425. SHALL REMAIN CLOSED UNTIL S&D FORCEMAIN IS INSTALLED OR IF USING PV-1420
PV-1420	OUTSIDE OF INFLUENT CHAMBER	12-INCH	PLUG VALVE	BURIED, 2-INCH SQ NUT	INLFUENT BYPASS FOR BOTH INFLUENT AND REDUNDANT LINES	CLOSED	CLOSED	CLOSED	CLOSED	ONLY OPEN IF INFLUENT CHAMBER AND REDUNDANT LINE ARE OFFLINE. INFLUENT CAN BE PUMPED DOWNSTREAM OF THE SCREENS AND GRIT.
PV-1425	OUTSIDE OF INFLUENT CHAMBER	6-INCH	PLUG VALVE	BURIED, 2-INCH SQ NUT	CONNECTION FOR S&D FORCEMAIN	OPEN (4)	OPEN (4)	OPEN (4)	OPEN (4)	CONNECTS THE S&D LIFT STATION FLOW. SHALL REMAIN CLOSED UNTIL S&D FORCEMAIN IS INSTALLED
PV-1430	OUTSIDE OF INFLUENT CHAMBER	6-INCH	PLUG VALVE	BURIED, 2-INCH SQ NUT	REDUNDANT LINE DRAIN	CLOSED	CLOSED	CLOSED	CLOSED	ONLY OPEN TO DRAIN INFLUENT OR CONDENSATE FROM THE REDUNDANT LINE

WASTEWATER DI FITTING SCHEDULE		
NUMBER	TYPE	NOTE
WWF-1	36"X20" DI MJ RJ TEE	
WWF-2	36"X12" DI MJ RJ TEE	
WWF-3	36", DI MJ RJ SLEEVE	
WWF-4	36", DI MJ RJ SLEEVE	
WWF-5	36" DI MJ RJ 22 DEG BEND	2
WWF-6	20" DI 45 DEG BEND	2
WWF-7	20" DI 22 DEG BEND	2
WWF-8	20" DI 45 DEG BEND	2
WWF-9	20"X6" DI MJ RJ TEE	
WWF-10	20" DI MJ RJ 45 DEG BEND	1
WWF-11	20" DI FLANGED 45 DEG BEND	1
WWF-12	20"X20" DI FLANGED TEE	
WWF-13	20" DI FLANGED DISMANTLING JOINT	
WWF-14	20"X20" DI FLANGED TEE	
WWF-15	20"X20" DI FLANGED TEE	
WWF-16	20"X12" DI FLANGED TEE	
WWF-17	20" DI FLANGED 45 DEG BEND	2
WWF-18	20" DI FLANGED 45 DEG BEND	2
WWF-19	20" DI FLANGED 45 DEG BEND	1, 2
WWF-20	20" DI FLANGED 45 DEG BEND	1, 2
WWF-21	12" DI MJ RJ 90 DEGREE BEND	2
WWF-22	12" DI BLIND FLANGE	
WWF-23	12" x 12" DI MJ RJ TEE	
WWF-24	12" X 6" DI MJ REDUCER	
WWF-25	6" DI MJ RJ 90 DEGREE BEND	1
WWF-26	6" DI MJ RJ 90 DEGREE BEND	2
WWF-27	6" DI MJ RJ 90 DEGREE BEND	1
WWF-28	6" DI BLIND FLANGE	
WWF-29	6" DI MJ RJ 90 DEGREE BEND	1
WWF-30	6"X4" DI MJ RJ REDUCER	
WWF-31	4" DI BLIND FLANGE	
WWF-32	3" DI FLANGED 90 DEGREE BEND	1
WWF-33	3" DI FLANGED 90 DEGREE BEND	1
WWF-34	3" DI FLANGED TEE	
WWF-35	3" DI FLANGED 90 DEGREE BEND	1
WWF-36	3" DI FLANGED 90 DEGREE BEND	1
WWF-37	3" DI FLANGED 90 DEGREE BEND	1
WWF-38	3" DI FLANGED 90 DEGREE BEND	1
NOTES:		
1. VERTICAL BEND		
2. HORIZONTAL BEND		

1 VALVES WILL NEED TO BE MANUALLY CLOSED DURING AN ELECTRICAL OUTAGE
2 VALVES WILL NEED TO BE MANUALLY OPENED DURING AN ELECTRICAL OUTAGE
3 IF THE INFLUENT CHAMBER IS OFFLINE AND NOT ABLE TO TAKE INFLUENT FLOW, ALL VALVES WILL BE CLOSED AND THE LIFT STATIONS WILL SSO.
4 VALVE SHALL REMAIN CLOSED UNTIL THE S&D LINE IS INSTALLED.

12/19/2025 RECORD DRAWINGS

DRAWN BY: JMM JOB DATE: 2023
APPROVED: MJW JOB NUMBER: 220608
CAD DATE: 12/18/2025 11:46:11 PM
CAD FILE: J:\2022\220608\CAD\Dwgs\P\P601.dwg

BAR IS ONE INCH ON OFFICIAL DRAWINGS.
0 1"
IF NOT ONE INCH, ADJUST SCALE ACCORDINGLY.

NO.	DATE	BY	REVISION DESCRIPTION

HRGreen HRGreen.com

REDUNDANT INFLUENT LINE
WASTEWATER TREATMENT FACILITY
BURLINGTON, IOWA

PROCESS
VALVE & FITTING SCHEDULE

SHEET NO.
P601

Xrefs: xg1-1-db01

ABBREVIATIONS

A	AMPERES
AC	ALTERNATING CURRENT
AF	AMPERE FRAME
AFF	ABOVE FINISHED FLOOR
AG	ABOVE FINISHED GRADE
AICS	AMPERES INTERRUPTING CAPACITY, SYMMETRICAL
ASD	ADJUSTABLE SPEED DRIVE
AT	AMPERE TRIP
ATS	AUTOMATIC TRANSFER SWITCH
AWG	AMERICAN WIRE GAUGE
BC	BARE COPPER
C	CONDUIT
CB	CIRCUIT BREAKER
CO	CONDUIT ONLY
CKT	CIRCUIT
CPT	CONTROL POWER TRANSFORMER
CT	CURRENT TRANSFORMER
DB	DIRECT BURIED
DC	DIRECT CURRENT
DWG	DRAWING
ELEV	ELEVATION
ENCL	ENCLOSURE
EP	EXPLOSION PROOF
ETM	ELAPSED TIME METER
EXIST	EXISTING
FLEX	FLEXIBLE
GFI	GROUND FAULT INTERRUPTER
GFR	GROUND FAULT RELAY
GND	GROUND
HH	HANDHOLE
HOA	HAND OFF AUTOMATIC
HP	HORSEPOWER
HVAC	HEATING, VENTILATING, AND AIR CONDITIONING
HZ	HERTZ
JB	JUNCTION BOX
KVA	KILOVOLT-AMPERES
KW	KILOWATT
LA	LIGHTNING ARRESTOR
LOS	LOCKOUT STOP PUSH-BUTTON
LS	LIMIT SWITCH
LTG	LIGHTING
MA	MILLIAMPERE
MAX	MAXIMUM
MCC	MOTOR CONTROL CENTER
MCM	THOUSAND CIRCULAR MILS
MIN	MINIMUM
MT	EMPTY
MTD	MOUNTED
N	NEUTRAL
NC	NORMALLY CLOSED
NL	NIGHTLIGHT
NO	NORMALLY OPEN
NO.	NUMBER
NTS	NOT TO SCALE
OL'S	MOTOR OVERLOAD CONTACTS
P	POLE
PB	PUSHBUTTON, PULLBOX
PH	PHASE
PS	PRESSURE SWITCH
PT	POTENTIAL TRANSFORMER
PVC	POLYVINYL CHLORIDE
REF	REFERENCE
REQ'D	REQUIRED
SH	SHIELDED
SHT	SHEET
STD	STANDARD
SW	SWITCH
TACH	TACHOMETER
TB	TERMINAL BOARD
TEL	TELEPHONE
TEMP	TEMPERATURE
TSP	TWISTED PAIR
XFMR	TRANSFORMER
TSP	TWISTED SHIELDED PAIR
TST	TWISTED SHIELDED TRIAD
TSTAT	THERMOSTAT
TYP	TYPICAL
UG	UNDERGROUND
UON	UNLESS OTHERWISE NOTED
V	VOLT
VFD	VARIABLE SPEED DRIVE
VS	VARIABLE SPEED
W	WATTS, WIRE
WP	WEATHERPROOF
ZS	POSITION SWITCH

ELECTRICAL SYMBOLS

- (UM) UTILITY METERING
- (AM) METERING DEVICE:
  AM–AMMETER
  VM–VOLTMETER
  WM–WATTMETER
  FM–FREQUENCY METER
  WHM–KILOWATT HOUR METER
  DM–DIGITAL MULTI–FUNCTION METER
  MFM–MULTI–FUNCTION METER
- [AS] AMMETER SWITCH
- [VS] VOLTMETER SWITCH
- CURRENT TRANSFORMER, QUANTITY INDICATED
- POTENTIAL TRANSFORMER, QUANTITY INDICATED
- (25) SWITCHGEAR DEVICE:
  11 MULTIFUNCTION RELAY
  21 DISTANCE RELAY
  25 SYNCHRONIZING OR SYNCHRONISM CHECK DEVICE
  26Q TEMPERATURE RELAY
  27 UNDERVOLTAGE RELAY
  32 DIRECTIONAL POWER RELAY
  43 MANUAL TRANSFER OR SELECTOR DEVICE
  46 REVERSE–PHASE OR PHASE–BALANCE CURRENT RELAY
  47 PHASE–SEQUENCE VOLTAGE RELAY
  49 MACHINE OR TRANSFORMER THERMAL RELAY
  50 INSTANTANEOUS OVERCURRENT OR RATE OF RISE RELAY
  50G ZERO SEQUENCE GROUND FAULT RELAY
  51 A–C TIME OVERCURRENT RELAY
  52 A–C CIRCUIT BREAKER
  59 OVERVOLTAGE RELAY
  63 SUDDEN PRESSURE RELAY
  65 GOVERNOR
  67 A–C DIRECTIONAL OVERCURRENT RELAY
  81 FREQUENCY RELAY
  86 LOCKOUT RELAY
  87 DIFFERENTIAL PROTECTIVE RELAY
- [K] KEY INTERLOCKING OF EQUIPMENT
- [M] MECHANICAL INTERLOCKING OF EQUIPMENT
- [E] ELECTRICAL INTERLOCKING OF EQUIPMENT
- POWER FACTOR CORRECTING CAPACITOR
- [PMR] PHASE MONITORING RELAY
- [ETM] ELAPSED TIME METER
- [SPD] SURGE PROTECTIVE DEVICE
- [MFM] MULTI–FUNCTION METER
- [RTU] REMOTE TERMINAL UNIT
- [TB] TERMINAL BLOCK
- (TC) TRIP COIL
- GENERATOR NEUTRAL JUNCTION
- NEUTRAL GROUNDING RESISTOR (NGR)
- [STB] SHORTING TERMINAL BLOCK
- SS SYNCH SWITCH
- MEDIUM VOLTAGE SURGE ARRESTER
- X 20A 3P OR X 100AF 80AT 3P LOW VOLTAGE CIRCUIT BREAKER (CB). RATINGS AND NO. OF POLES AS SHOWN. WHEN SPECIFIC TYPE IS REQUIRED, X INDICATES TYPE.
  TYPES:
  MCCB – MOLDED CASE
  ICCB – INSULATED CASE
  LVP – LOW VOLTAGE POWER
  MCP – MOTOR CIRCUIT PROTECTOR (RATING PER CONNECTED LOAD)
- [CB] SEPARATELY MOUNTED CIRCUIT BREAKER, SEE ELECTRICAL ONE LINE DIAGRAM OR SCHEDULE FOR DESCRIPTION
- [GFP] GROUND FAULT PROTECTION

ELECTRICAL SYMBOLS

- [52] MEDIUM VOLTAGE CIRCUIT BREAKER
- FUSE, SIZE AND NUMBER OF FUSES AS NOTED
- FUSED CUTOUT, CURRENT RATING, FUSE SIZE AND NUMBER OF POLES AS NOTED
- FUSIBLE SWITCH, CURRENT RATING, FUSE SIZE AND QUANTITY AS NOTED
- NON–FUSED SWITCH, CURRENT RATING AND NUMBER OF POLES AS NOTED
- DISCONNECT OR DRAWOUT CONNECTION
- TYPE/SIZE, FEATURES — MOTOR CONTROLLER

TYPE/SIZE
SUCCEEDING NUMBER INDICATES NEMA STARTER SIZE
FVR = FULL VOLTAGE REVERSING
FVNR = FULL VOLTAGE NON–REVERSING
RVSS = REDUCED VOLTAGE SOFT STARTER
VFD = VARIABLE FREQUENCY DRIVE
2S2W = TWO–SPEED TWO–WINDING
2S1W = TWO SPEED ONE–WINDING

FEATURES
1 – CONTROL POWER TRANSFORMER, 120V SECONDARY
2R – 2: DENOTES INDICATING LIGHT MODIFIER:
R – RED
G – GREEN
A – AMBER
W – WHITE
3A – 3: DENOTES CONTROL SWITCH MODIFIER:
A – HAND–OFF–AUTO
B – HAND–OFF–REMOTE
C – ON–OFF
D – FORWARD–OFF–REVERSE
4 – START–STOP PUSHBUTTONS, MOMENTARY
5 – ELAPSED TIME METER
6 – KEYPAD/DISPLAY ON DOOR
7 – OUTPUT dV/dT FILTER
8 – DISCONNECT SWITCH

- THERMAL OVERLOAD ELEMENT
- OL THERMAL OVERLOAD RELAY CONTACT
- 7.5 OR HP MOTOR WITH DESIGN HORSEPOWER (WHEN INDICATED)
- (G) GENERATOR
- TRANSFER SWITCH, CURRENT RATING AND NUMBER OF POLES AS NOTED. ATS
  ATS – AUTOMATIC
  MTS – MANUAL
- TRANSFORMER
  △ 3 PHASE, 3 WIRE DELTA CONNECTION
  3 PHASE, 4 WIRE GROUNDED WYE CONNECTION
- SWITCHBOARD OR PANELBOARD. NAME, VOLTAGE, PHASE, NUMBER OF WIRES WHEN INDICATED. NAME VOLTAGE
- DELTA CONNECTION
- WYE CONNECTION
- GROUNDED WYE CONNECTION
- MANUAL MOTOR STARTER
- OL'S MOTOR OVERLOAD HEATER CONTACTS
- MOTOR OVERLOAD HEATER
- [S] SOLENOID OPERATED VALVE
- MOTOR
- ALARM
- FUSE
- CONTROL POWER TRANSFORMER
- GROUND
- WIRING IN MOTOR STARTER
- FIELD WIRING

ELECTRICAL SYMBOLS PLANS

LIGHT FIXTURES

- CEILING/PENDANT MOUNTED FIXTURE
- CEILING/PENDANT MOUNTED FIXTURE, EMERGENCY/NIGHT LIGHT
- WALL MOUNTED FIXTURE
- CEILING/PENDANT MOUNTED FIXTURE
- WALL MOUNTED FIXTURE
- CEILING/PENDANT MOUNTED FIXTURE, EMERGENCY/NIGHT LIGHT
- WALL MOUNTED FIXTURE, EMERGENCY/NIGHT LIGHT
- EXIT LIGHT, CEILING MOUNTED, ARROW DIRECTION AS INDICATED. SHADED SECTION INDICATES ILLUMINATION FACE.
- EXIT LIGHT, WALL MOUNTED, ARROW DIRECTION AS INDICATED. SHADED SECTION INDICATES ILLUMINATION FACE.
- EMERGENCY LIGHT FIXTURE, 2 ATTACHED HEADS AS SHOWN
- EMERGENCY LIGHT, REMOTE MOUNTED HEAD

FIRE ALARM SYSTEM

- [F] MANUAL PULL STATION, 48" ABOVE FLOOR
- VISUAL ALARM LIGHT 80" ABOVE FLOOR OR AS NOTED
- AUDIBLE ALARM DEVICE WITH VISUAL ALARM LIGHT 80" ABOVE FLOOR OR AS NOTED
- [F] COMBINATION AUDIBLE ALARM DEVICE AND VISUAL ALARM LIGHT 80" ABOVE FLOOR, AND MANUAL PULL STATION 48" ABOVE FLOOR
- GENERAL ALARM BELL 80" ABOVE FLOOR OR AS NOTED
- [F] VISUAL ALARM LIGHT 80" ABOVE FLOOR, AND MANUAL PULL STATION 48" ABOVE FLOOR.
- (F) THERMAL FIRE DETECTOR, COMBINATION RATE OF RISE AND FIXED TEMPATURE. '200' INDICATES 200 DEGREE FIXED TEMPATURE. '135' INDICATES 135 DEGREE FIXED TEMPATURE. 'ST' INDICATES DETECTOR TO INITIATE ELEVATOR C.B. SHUNT–TRIP.
- [F] AUTOMATIC DOOR RELEASE CONNECTION
- SMOKE DAMPER CONNECTION
- [F] SMOKE DETECTOR ON CEILING;
  'D'–INDICATES DUCT DETECTOR TYPE
  'R'–INDICATES RELAY FOR AUXILIARY CONTROLS
  'ER' INDICATES DETECTOR TO INITIATE ELEVATOR RECALL
  'PT' INDICATES PROJECTED BEAM TYPE TRANSMITTER
  'PR' INDICATES PROJECTED BEAM TYPE RECEIVER
- [F] FAN SHUT–DOWN CONNECTION
- [R] REMOTE DETECTOR INDICATOR LIGHT
- [R] DUCT SMOKE DETECTOR REMOTE TEST/RESET STATION
- [FS] SPRINKLER FLOW SWITCH CONNECTION
- [TS] TAMPER–PROOF SPRINKLER VALVE SWITCH CONNECTION
- [FAZ] FIRE ALARM ZONE ANNUNCIATOR
- [FAM] FIRE ALARM MASTER ANNUNCIATOR
- [FACP] FIRE ALARM CONTROL PANEL
- [C] TELEPHONE STATION
- [G] GAS DETECTOR SENSOR
- FIRE ALARM ZONE

SITE

- LIGHTING CONTROL STATION, PAD MOUNTED
- LIGHTING CONTROL STATION, POLE MOUNTED
- HAND HOLE
- (J) JUNCTION BOX
- [T] UTILITY TRANSFORMER, PAD MOUNTED
- (T) UTILITY TRANSFORMER, POLE MOUNTED
- [PC] PHOTOCELL
- (MH) MAN HOLE
- UNDERGROUND CONDUIT
- POLE MOUNTED LIGHTING UNIT, AS SPECIFIED
- BACK MOUNTED LIGHTING UNIT, AS SPECIFIED
- TOWER LIGHTING UNIT, AS SPECIFIED
- ATHLETIC FIELD LIGHTING UNIT, AS SPECIFIED

CONDUIT, RACEWAY AND WIRING

- CONDUIT TURNING UP
- CONDUIT TURNING DOWN
- HOME RUN TO PANEL, 2 #12, 1 #12G IN 3/4"C UNLESS OTHERWISE NOTED
- CIRCUIT RUN BETWEEN DEVICES EXPOSED IN NON–ARCHITECTURALLY FINISHED AREAS, CONCEALED IN ARCHITECTURALLY FINISHED AREAS. CONDUIT AND CONDUCTOR SIZES SHALL BE THE SAME AS THE HOMERUN FOR THE CIRCUIT
- CONDUIT RUN BETWEEN DEVICES CONCEALED IN NON–ARCHITECTURALLY FINISHED AREAS OR UNDER FLOOR SLAB. CONDUIT AND CONDUCTOR SIZES SHALL BE THE SAME AS THE HOMERUN FOR THE CIRCUIT.
- CIRCUIT CONTINUATION
- CONDUIT STUBBED OUT AND CAPPED
- ### CONDUIT TAG OR CIRCUIT NUMBER – WIRE AND CONDUIT SIZE AS SPECIFIED IN CIRCUIT SCHEDULE ON THE SHEETS
- PLUG IN STRIP–TYPE RECEPTACLES OR OTHER OUTLETS AS INDICATED
- LAY IN WIREWAY DUCT, SIZE AS NOTED
- FEEDER DUCT–RATING AND NUMBER OF CONDUCTORS AS NOTED
- PLUG IN DUCT–RATING AND NUMBER OF CONDUCTORS AS NOTED
- CABLE TRAY, TYPE AS NOTED

CONDUIT TAGS
A. GRS: GALVANIZED RIGID STEEL
B. RAC: RIGID ALUMINUM CONDUIT
C. PVC–GRS: PVC COATED GALVANIZED RIGID STEEL CONDUIT
D. PVC: RIGID POLYVINYL CHLORIDE CONDUIT
E. EMT: ELECTRICAL METALLIC TUBING CONDUIT (THINWALL)
F. LFMC: LIQUIDTIGHT FLEXIBLE METAL CONDUIT
G. HDPE: HIGH DENSITY POLYETHYLENE CONDUIT
H. FMC: FLEXIBLE METAL CONDUIT

COMMUNICATIONS SYSTEM

- (S) SPEAKER OUTLET RECESSED IN CEILING (UNLESS NOTED OTHERWISE), 'S'–INDICATES SURFACE TYPE, 'C'–INDICATES SPEAKER CONCEALED ABOVE CEILING, 'P'–INDICATES PROJ. HORN TYPE, 'DF'–INDICATES DOUBLE FACE TYPE
- TELEPHONE OUTLET, IN WALL 16" ABOVE FLOOR OR AS NOTED. 'W' INDICATES WALL MOUNTED TELEPHONE AT 54"
- COMPUTER TERMINAL OUTLET–IN WALL OR AS NOTED
- COMBINATION TELEPHONE & COMPUTER TERMINAL OUTLET IN WALL 16" ABOVE FLOOR OR AS NOTED
- TELEPHONE OUTLET, IN FLOOR BOX
- [V] VOLUME CONTROL, NUMERAL DESIGNATES ASSOCIATED SPEAKERS

GROUNDING

- GROUND GRID CONDUCTOR (SIZE PER DWG.)
- GROUND ROD
- GROUND SYSTEM TEST WELL
- EXOTHERMIC WELDED GROUND CONNECTION
- EQUIPMENT GROUND CABLE STUB–UP
- [MGB] MAIN GROUND BAR

WIRING DEVICE

- (C) CLOCK HANGER RECEPTACLE–20A , 125V, 2P, 3W (NEMA 5–20R), IN WALL +84" OR AS' NOTED
- SIMPLEX RECEPTACLE – 125V, 2P, 3W 20A, 30A, OR 50A AT OUTLET INDICATES AMP. RATING (NEMA 5–20R, 5–30R, OR 5–50R), IN WALL OR AS NOTED
- DUPLEX RECEPTACLE–20A, 125V, 2P, 3W (NEMA 5–20R), IN WALL
- DUPLEX RECEPTACLE–20A, 125V, 2P, 3W (NEMA 5–20R) IN CEILING
- DUPLEX RECEPTACLE–20R, 125V, 2P,3W (NEMA 5–20R), IN WALL ABOVE COUNTER TOP OR BACK SPLASH 'GFI'–INDICATES GROUND FAULT INTERRUPTER TYPE 'SS'–INDICATES SURGE SUPPRESSER TYPE 'IG'–INDICATES ISOLATED GROUND TYPE
- DUPLEX RECEPTACLE–20R, 125V, 2P, 3W (NEMA 5–20R), IN WALL OR AS NOTED, ONE RECEPTACLE HOT, ON RECEPTACLE SWITCH
- FLOOR OUTLET BOX WITH SIMPLEX RECEPTACLE–20A, 125V, 2P, 3W (NEMA 5–20R)
- FLOOR OUTLET WITH DUPLEX RECEPTACLE
- OUTLET WITH SPECIAL DEVICE AS NOTED, IN WALL
- OUTLET WITH SPECIAL DEVICE AS NOTED, IN FLOOR
- OUTLET WITH SPECIAL DEVICE AS NOTED, IN CEILING
- (J) JUNCTION BOX OR OUTLET BOX
- SINGLE POLE WALL SWITCH:
  # – INDICATES 2–WAY, 3–WAY OR 4–WAY
  PL – PILOT LIGHT
  L/T – LOCKING TYPE
  LV – LOW VOLTAGE TYPE
  T – TIMER
  MC – MOMENTARY CONTACT
- [P] PULL BOX
- PUSHBUTTON, AS NOTED
- LOCAL LIGHT DIMMER, M INDICATES MASTER CONTROLLER
  1000 INDICATES 1000 WATTS
  1500 INDICATES 1500 WATTS
  2000 INDICATES 2000 WATTS
- 3 MOTOR SPEED CONTROLLER 2–SPEED, 3–SPEED OR VARIABLE SPEED AS INDICATED
- [DH] MAGNETIC DOOR HOLD

EQUIPMENT

- MOTOR CONNECTION
- (E) EQUIPMENT TERMINAL POINT
- SAFETY DISCONNECT SWITCH, NON–FUSED UNLESS NOTED (F)
- $M MOTOR RATED SWITCH, NO. OF POLES AS REQUIRED.
- [FS] FUSE HOLDER WITH FUSESTAT AND TOGGLE SWITCH
- MOTOR STARTER–MAGNETIC UNLESS NOTED MAN. (MANUAL)
- COMBINATION MOTOR STARTER AND FUSED DISCONNECT SWITCH–MAGNETIC STARTER
- COMBINATION MOTOR STARTER AND NON–FUSED DISCONNECT SWITCH–MAGNETIC STARTER
- BRANCH CIRCUIT PANELBOARD SURFACE MOUNTED
- BRANCH CIRCUIT PANELBOARD FLUSH MOUNTED
- SPECIAL CABINET OR EQUIPMENT AS NOTED SURFACE MOUNTED
- SPECIAL CABINET OR EQUIPMENT AS NOTED FLUSH MOUNTED
- [T15] DRY–TYPE TRANSFORMER, NUMBER INDICATES KVA SIZE
- POWER DISTRIBUTION PANELBOARD SURFACE MOUNTED OR FREESTANDING, AS NOTED
- POWER DISTRIBUTION PANELBOARD, ELECTRICAL EQUIPMENT MCC OR SWITCHBOARD, FLUSH MOUNTED
- [ATS] AUTOMATIC TRANSFER SWITCH
- [MTS] MANUAL TRANSFER SWITCH
- [CS] CONTROL STATION
- [LC] LIGHTING CONTACTOR

NOTE:
NOT ALL SYMBOLS SHOWN IN THESE LISTS MAY BE USED IN THIS PROJECT. CONTACT ARCHITECT OR ENGINEER FOR CLARIFICATION OF ANY DISCREPANCIES.

SECURITY SYSTEM

- [K] KEYPAD STATION
- (K) KEYPAD ACCESS CONTROL
- (C) CARD ACCESS READER
- (C)(K) COMBINATION KEYPAD ACCESS CONTROL & CARD ACCESS READER
- (G) GLASS BREAK SENSOR
- (D) SECURE DOOR. ELECTRICAL STRIKE & CONTACTS AS SCHEDULED
- (W) SECURE WINDOW ELECTRICAL STRIKE
- (M) SECURITY MOTION SENSOR, AS INDICATED
- (P) SECURITY ACCESS PROXIMITY SENSOR
- CLOSE CIRCUIT TELEVISION CAMERA FIXED MOUNTED
- CLOSED CIRCUIT TELEVISION CAMERA REMOTE PAN, TILT, & CONTROL
- [DC] DOOR CABINET
- [SEC] SECURITY EQUIPMENT CONTROL PANEL

VENTILATION ALARM SYSTEM

- HORN
- STROBE
- PUSHBUTTON ENCLOSURE W/ PILOT LIGHTS

MISCELLANEOUS

- (T) THERMOSTAT 48" ABOVE FLOOR.
- [PC] PHOTOCELL CONTROL
- [HD] ELECTRIC HAND DRYER AS NOTED.
- (E1) REFERENCED NOTE
- [TS] TIME SWITCH
- [TMGB] TELECOMMUNICATIONS MAIN GROUND BAR AT 80" OR AS NOTED.
- [TGBXX] TELECOMMUNICATIONS GROUND BAR. 'XX' INDICATES GROUND BAR NUMBER.
- (S) OCCUPANCY SENSOR, CEILING MOUNTED
- (S) OCCUPANCY SENSOR, WALL MOUNTED, 48" ABOVE FLOOR
- EM SPECIAL SYSTEM WIRING TO CENTRAL EQUIPMENT, PANEL, TERMINAL CABINET OR NEXT DEVICE.
  EM = EMERGENCY SYSTEM
  FO = FIBER OPTIC
  MVE = MEDIUM VOLTAGE ELECTRICAL
  E = ELECTRIC AS NOTED
  GF = CIRCUIT TO GROUND FAULT CIRCUIT BREAKER
  EIL = EQUIPMENT INTERLOCK
  MT = EMPTY CONDUIT

NOTES

1. ALL WALL RECEPTACLES, TELEPHONE OUTLETS OR SIMILAR OUTLETS TO BE 16" ABOVE FLOOR TO BOTTOM UNLESS OTHERWISE INDICATED.
2. ALL WALL SWITCHES, PUSHBUTTONS AND DIMMERS TO BE 48" ABOVE FLOOR TO BOTTOM UNLESS OTHERWISE INDICATED.
3. UPPER CASE LETTERS 'XX' AT DEVICE INDICATES AS NOTED;
   DD = DOUBLE DUPLEX RECEPTACLES IN TWO GANG BOX
   IG = ISOLATED GROUND TYPE
   SS = SURGE SUPPRESSION TYPE
   GFI = GROUND FAULT INTERRUPTER TYPE
   WP = WEATHERPROOF
   XP = EXPLOSION PROOF
   TL = TWIST LOCK TYPE
   WG = WIREGUARD TO BE PROVIDED
   RI = ROUGH–IN ONLY
4. LOWER CASE LETTERS AT SWITCHES AND FIXTURES INDICATE ASSOCIATED UNITS FOR SWITCHING.
5. UPPER CASE LETTERS AT FIXTURE INDICATE FIXTURE TYPE.
6. NUMBER AT FIXTURE OR OUTLET INDICATES PANEL CIRCUIT NUMBER.
7. PLUS (+) SIGN WITH DIMENSION AT OUTLET INDICATES HEIGHT ABOVE FINISHED FLOOR LINE OR HEIGHT ABOVE FINISHED GRADE.

12/19/2025 RECORD DRAWINGS

Xrefs: xg1-1-dh01

DRAWN BY:	KS	JOB DATE:	2023
APPROVED:	JLH	JOB NUMBER:	220608
CAD DATE:	12/18/2025 11:48:02 PM		
CAD FILE:	J:\2022\220608\CAD\Dwgs\E\E000.dwg		

BAR IS ONE INCH ON OFFICIAL DRAWINGS. 0 1" IF NOT ONE INCH, ADJUST SCALE ACCORDINGLY.

NO.	DATE	BY	REVISION DESCRIPTION

HRGreen HRGreen.com

REDUNDANT INFLUENT LINE
WASTEWATER TREATMENT FACILITY
BURLINGTON, IOWA

ELECTRICAL
GENERAL INFORMATION

SHEET NO.
E000

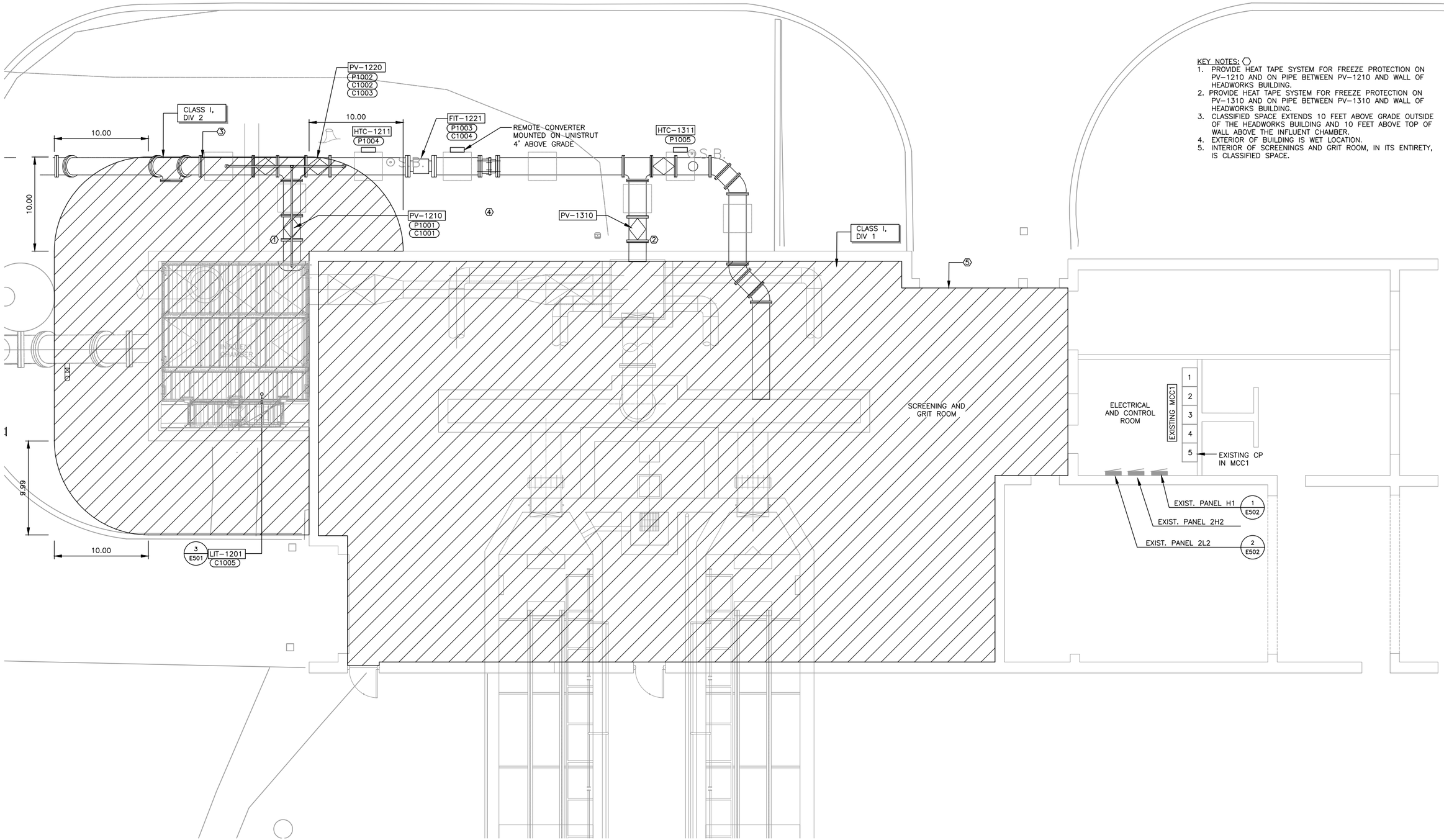

KEY NOTES:

1. PROVIDE HEAT TAPE SYSTEM FOR FREEZE PROTECTION ON PV-1210 AND ON PIPE BETWEEN PV-1210 AND WALL OF HEADWORKS BUILDING.
2. PROVIDE HEAT TAPE SYSTEM FOR FREEZE PROTECTION ON PV-1310 AND ON PIPE BETWEEN PV-1310 AND WALL OF HEADWORKS BUILDING.
3. CLASSIFIED SPACE EXTENDS 10 FEET ABOVE GRADE OUTSIDE OF THE HEADWORKS BUILDING AND 10 FEET ABOVE TOP OF WALL ABOVE THE INFLUENT CHAMBER.
4. EXTERIOR OF BUILDING IS WET LOCATION.
5. INTERIOR OF SCREENINGS AND GRIT ROOM, IN ITS ENTIRETY, IS CLASSIFIED SPACE.

1 ELECTRICAL PLAN
SCALE: 1"=5'-0"

12/19/2025 RECORD DRAWINGS

Xrefs: xgl-1-dh01; xc-0-son; XSX-0-P00 reference; xV-Survey-adjusted; xc-0-storm; XE-1-P01

DRAWN BY:	JMM	JOB DATE:	2023
APPROVED:	MJW	JOB NUMBER:	220608
CAD DATE:	12/19/2025 12:55:07 AM		
CAD FILE:	J:\2022\220608\CAD\Dwgs\E\E101.dwg		

BAR IS ONE INCH ON OFFICIAL DRAWINGS. 0 1" IF NOT ONE INCH, ADJUST SCALE ACCORDINGLY.

NO.	DATE	BY	REVISION DESCRIPTION

HRGreen.com
HRGreen

REDUNDANT INFLUENT LINE
WASTEWATER TREATMENT FACILITY
BURLINGTON, IOWA

ELECTRICAL
ELECTRICAL PLAN

SHEET NO.
E101

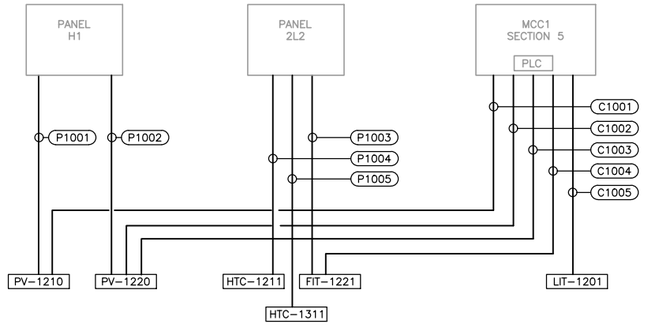

1 POWER & CONTROL CONNECTION SCHEMATIC

SCALE: NONE

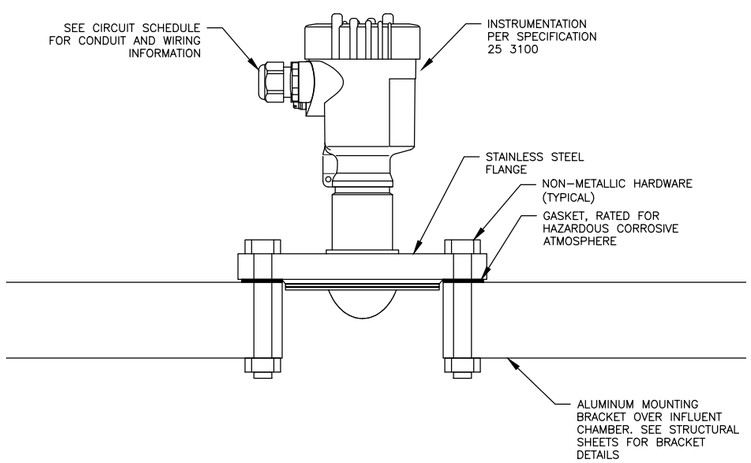

3 LEVEL SENSOR MOUNTING

SCALE: NONE

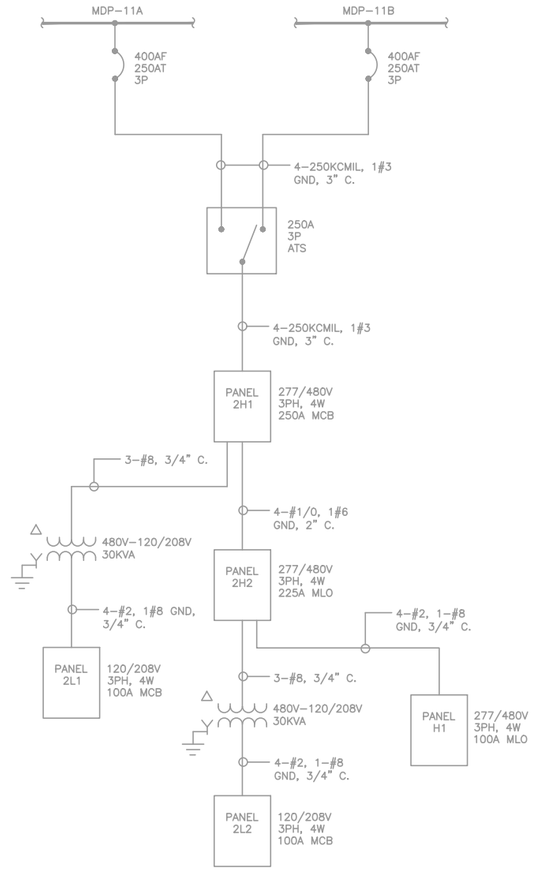

2 PARTIAL ONE–LINE DIAGRAM

SCALE: NONE

NOTES:
1. INSTALL NEW BREAKERS IN EXISTING PANELS AS INDICATED ON E502.
2. LIGHT LINEWEIGHT INDICATES EXISTING EQUIPMENT. DARK LINEWEIGHT INDICATES NEW WORK.

12/19/2025 RECORD DRAWINGS

DRAWN BY: KS	JOB DATE: 2023	BAR IS ONE INCH ON OFFICIAL DRAWINGS.	
APPROVED: JLH	JOB NUMBER: 220608	0 1"	
CAD DATE: 12/18/2025 11:49:16 PM		IF NOT ONE INCH, ADJUST SCALE ACCORDINGLY.	
CAD FILE: J:\2022\220608\CAD\Dwgs\E\E501.dwg			

NO.	DATE	BY	REVISION DESCRIPTION

HRGreen.com
HRGreen

REDUNDANT INFLUENT LINE
WASTEWATER TREATMENT FACILITY
BURLINGTON, IOWA

ELECTRICAL
ONE LINE DIAGRAM & SCHEMATIC

SHEET NO.
E501

Xrefs: xg1-1-dh01; XE-0-D01



1 EXISTING PANEL H1 (SQUARE D – NF)
SCALE: NONE



2 EXISTING PANEL 2L2 (SQUARE D – NQOD)
SCALE: NONE

KEY NOTES:
1. USE SPARE 20A–3P BREAKER FOR PV–1210 POWER CIRCUIT.
2. PROVIDE NEW 20A–3P BREAKER (SQUARE D P/N EGB34020) IN AVAILABLE SPACE FOR PV–1220 POWER CIRCUIT.

NOTES:
1. PROVIDE TWO NEW 20A–1P BREAKERS IN AVAILABLE SPACE AT BOTTOM OF PANEL FOR HEAT TRACE POWER CIRCUITS.
2. PROVIDE ONE 20A–1P BREAKER IN AVAILABLE SPACE AT BOTTOM OF PANEL FOR FIT–1221 POWER CIRCUIT.

12/19/2025 RECORD DRAWINGS

Xrefs: xg-1-dn01; XE-0-001

DRAWN BY: KS JOB DATE: 2023
APPROVED: JLH JOB NUMBER: 220608
CAD DATE: 12/18/2025 11:49:44 PM
CAD FILE: J:\2022\220608\CAD\Dwgs\E\E502.dwg

BAR IS ONE INCH ON OFFICIAL DRAWINGS.
0 1"
IF NOT ONE INCH, ADJUST SCALE ACCORDINGLY.

NO.	DATE	BY	REVISION DESCRIPTION

HRGreen.com
HRGreen

REDUNDANT INFLUENT LINE
WASTEWATER TREATMENT FACILITY
BURLINGTON, IOWA

ELECTRICAL
DETAILS

SHEET NO.
E502

CONTROL CABLE & RACEWAY SCHEDULE

CIRCUIT #	FROM	TAG #	TO	TAG #	CONDUCTORS	CONDUIT	REMARKS
C1001	PLUG VALVE – INFLUENT CHAMBER TO REDUNDANT INFLUENT PIPE	PV–1210	PLC IN MCC1 SECTION 5 (CONTROL PANEL)	PLC–MCC1	10–#14, #14 GND	1"	2 SPARE
C1002	MODULATING PLUG VALVE – REDUNDANT INFLUENT PIPE	PV–1220	PLC IN MCC1 SECTION 5 (CONTROL PANEL)	PLC–MCC1	2–#18 TSP, #14 GND	1"	
C1003	MODULATING PLUG VALVE – REDUNDANT INFLUENT PIPE	PV–1220	PLC IN MCC1 SECTION 5 (CONTROL PANEL)	PLC–MCC1	4–#14, #14 GND	1"	2 SPARE
C1004	REDUNDANT INFLUENT PIPE MAGNETIC FLOWMETER	FIT–1221	PLC IN MCC1 SECTION 5 (CONTROL PANEL)	PLC–MCC1	1–#18 TSP, 2–#14, #12 GND	1"	2–#14 FOR 24VDC TOTALIZER PULSE
C1005	INFLUENT CHAMBER LEVEL TRANSMITTER	LIT–1201	PLC IN MCC1 SECTION 5 (CONTROL PANEL)	PLC–MCC1	1–#18 TSP, #12 GND	1"	

POWER CABLE & RACEWAY SCHEDULE

CIRCUIT #	FROM	TAG #	TO	TAG #	CONDUCTORS	CONDUIT	REMARKS
P1001	480V POWER PANEL	H1	PLUG VALVE OPEN/CLOSE ACTUATOR	PV–1210	3–#12, #12 GND	1"	
P1002	480V POWER PANEL	H1	PLUG VALVE MODULATING ACTUATOR	PV–1220	3–#12, #12 GND	1"	
P1003	120/208V POWER PANEL	2L2	MAGNETIC FLOWMETER	FIT–1221	2–#12, #12 GND	1"	
P1004	120/208V POWER PANEL	2L2	HEAT TRACE CONTROLLER	HTC–1211	2–#12, #12 GND	1"	
P1005	120/208V POWER PANEL	2L2	HEAT TRACE CONTROLLER	HTC–1311	2–#12, #12 GND	1"	

MCC1 PLC I/O SCHEDULE

TAG	DESCRIPTION	DI	DO	AI	AO	PI (Pulse)	COMM.	PLC LOCATION	I/O	REMARKS
PV-1210	PLUG VALVE ACTUATOR - IN REMOTE	1						MCC1 SECTION 5		1
PV-1210	PLUG VALVE ACTUATOR - OPEN	1						MCC1 SECTION 5	SLOT 4 - 14	
PV-1210	PLUG VALVE ACTUATOR - CLOSED	1						MCC1 SECTION 5	SLOT 4 - 15	
PV-1210	PLUG VALVE PV-1210 ACTUATOR - OPEN COMMAND		1					MCC1 SECTION 5	SLOT 5 - 8	
PV-1210	PLUG VALVE ACTUATOR - CLOSE COMMAND		1					MCC1 SECTION 5	SLOT 5 - 9	
PV-1220	PLUG VALVE ACTUATOR - IN REMOTE	1						MCC1 SECTION 5		1
PV-1220	PLUG VALVE ACTUATOR - POSITION COMMAND				1			MCC1 SECTION 5	SLOT 16 - 2	
PV-1220	PLUG VALVE ACTUATOR - POSITION FEEDBACK			1				MCC1 SECTION 5	SLOT 11 - 2	
FIT-1221	REDUNDANT LINE FLOWMETER			1				MCC1 SECTION 5	SLOT 11 - 3	
FIT-1221	REDUNDANT LINE FLOWMETER					1		MCC1 SECTION 5		1
LIT-1201	INFLUENT CHAMBER LEVEL TRANSMITTER			1				MCC1 SECTION 5	SLOT 13 - 3	
	TOTAL	4	2	3	1	1				

NOTE: PLC IS EXISTING. CONTRACTOR TO FIELD VERIFY AVAILABILITY OF I/O.

1: IF ADDITIONAL DI POINTS ARE AVAILABLE IN THE EXISTING PLC, ADD SIGNALS TO PLC. RECORD I/O ASSIGNMENT IN AS-BUILT DRAWINGS

12/19/2025 RECORD DRAWINGS

DRAWN BY: KS JOB DATE: 2023
APPROVED: JLH JOB NUMBER: 220608
CAD DATE: 12/18/2025 11:50:29 PM
CAD FILE: J:\2022\220608\CAD\Dwgs\E\E601.dwg

BAR IS ONE INCH ON OFFICIAL DRAWINGS.
0 1"
IF NOT ONE INCH, ADJUST SCALE ACCORDINGLY.

NO.	DATE	BY	REVISION DESCRIPTION

HRGreen.com
HRGreen

REDUNDANT INFLUENT LINE
WASTEWATER TREATMENT FACILITY
BURLINGTON, IOWA

ELECTRICAL
SCHEDULES

SHEET NO.
E601

Xrefs: xg1-1-dh01; XE-0-D10







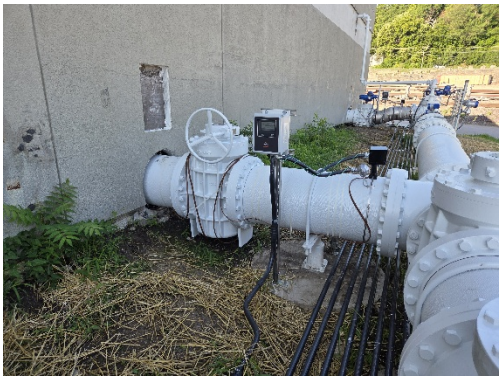



O&M MANUAL FOR

Wastewater Treatment Facility – Redundant Influent Line

PREPARED FOR

City of Burlington, IA

400 Washington Street
Burlington, IA 52601

Created: December 2025

HRGreen

8710 Earhart Lane SW
Cedar Rapids, IA 52404
Phone: 319.841.4000
Fax: 713.965.0044

Learn more at HRGreen.com

TABLE OF CONTENTS

I. BACKGROUND 1
A. PURPOSE 1
B. INFLUENT PIPE HISTORY 1
II. REDUNDANT INFLUENT LINE 1
A. OPERATION 1
B. BYPASSING 2
C. MAINTENANCE 2
III. VALVES, MAG METER, AND RADAR LEVEL SENSOR 3
A. ECCENTRIC PLUG VALVES 3
B. MAG METER 3
C. RADAR LEVEL SENSOR 3
IV. APPENDIX A - VALVE LAYOUT, OPERATION, AND SCHEDULE 4
V. APPENDIX B – HYDRAULIC PROFILE 5
VI. APPENDIX C – PROCESS FLOW DIAGRAM 6

I. BACKGROUND

A. PURPOSE

This manual summarizes daily plant operation, testing, and maintenance requirements for the wastewater treatment plant (WWTP) influent redundant line. All maintenance should be documented, and records should be saved to maintain equipment warranties. A description of the individual wastewater treatment components and operation and maintenance (O&M) requirements are provided in the subsequent sections.

Refer to the individual equipment O&M manuals by their respective manufacturers for more detailed maintenance requirements, part numbers, warranty information, contact information, etc.

B. INFLUENT PIPE HISTORY

The existing WWTF influent line is a 36-inch buried forcemain that discharges into the influent chamber. From there wastewater flows into a 20-inch mag meter. Wastewater then enters the screening box. 100% of the City's raw wastewater enters the plant through the influent chamber, and there were no permanent bypass pipes or pumps that allow this infrastructure to be taken out of service without shutting down the Market St. and South St. lift stations and bypassing raw wastewater to the Mississippi River. Any repair events required the WWTF to bypass raw wastewater to the Mississippi River. This included shutting down lift stations, closing valves, and routing sewer flows to combined sewer overflow (CSO) points in the wastewater collection system and rerouting flow from the Mississippi Interceptor to a lift station within the WWTF. The Iowa Department of Natural Resources (DNR) requires bypass events due to failure of equipment or for repairs to be reported as sewer bypass events.

In addition to the absence of influent infrastructure redundancy, the capacity of the WWTF is currently limited by the size of the influent flow meter (20-inch) as well as the influent mechanical screens. The 20-inch flow meter is installed on a 36-inch pipe and requires a reducer on each side of the flow meter. This creates a bottleneck where fluid velocity and headloss are both increased, reducing total capacity of the influent piping. This increase in velocity also increases scouring of the pipe lining due to grit which can be present in the raw influent wastewater, especially during periods of wet weather increased flow rates. The calculated maximum capacity in the influent flow meter is approximately 25 million gallons per day (MGD) in its current configuration. The mechanical screens were originally rated for 20.8 MGD – capacity was later increased to approximately 24 MGD in 2012 after the screen openings were increased to 0.1". The WWTF is rated for an average dry weather (ADW) of 5.1 MGD, average wet weather (AWW) of 10.85 MGD, and a maximum wet weather (MWW) of 28.3 MGD according to their most recent NPDES permit issued on January 1, 2025.

A redundant influent line was installed in the fall of 2025 to re-route wastewater around the influent chamber and/or mechanical screens during peak flow events or planned bypasses. The plug valve layout and valve schedule for normal operation is shown in Appendix A. The hydraulic profile is shown in Appendix B and the process flow diagram is shown in Appendix C.

II. REDUNDANT INFLUENT LINE

A. OPERATION

During typical low flow events, raw wastewater flows through a 36-inch influent line, into the influent chamber and into a 36-inch line. This line necks down into a 20-inch mag meter and then discharges into the screening box. From there, wastewater enters one of two 18-inch influent lines to the screens which discharges into the screening channel. The plug valve layout and valve schedule for normal operation is shown in Appendix A.

During peak flow events where the PHWW flow can exceed the capacity of the main 20-inch mag meter, the redundant line is utilized to reduce CSOs to the Mississippi River. Once the wastewater in the influent chamber reaches a certain level, PV-1210, which is electrically actuated, opens and allows raw wastewater to enter the plant via the redundant line. Wastewater travels through the redundant line via PV-1210 and subsequently through PV-1220, the modulating valve, then through the mag meter and through PV-1230 into the screenings channel. The modulating valve controls the flow through the redundant influent line as to not exceed the plant capacity downstream of the screens. Wastewater that is routed through the redundant line in this option bypasses the screens, since they have a smaller capacity. To avoid large solids from getting past the screens, there is a stainless-steel weir in front of the opening to the redundant line in the influent chamber. The redundant line layout showing the plug valves and valve schedule are shown in Appendix A.

B. BYPASSING

To allow for maintenance and repair of the influent structure, the redundant influent line allows for bypassing the influent chamber, the mag meter inside the building, and/or the screens.

To bypass the influent structure, the valve upstream of the mag meter inside the building, PV-1210, and, PV-1010 can be closed. PV-1110, PV1120, and PV-1310 can be opened. This will allow wastewater to flow through the 20-inch buried forcemain, around the influent chamber and through the 20-inch redundant line. Wastewater would then enter the screenings box and be routed through the screens.

To bypass the screenings box and influent screen, the influent chamber, mag meter inside the building, and screenings box must be taken offline. PV-1210, PV-1310, and PV-1010 can be closed. PV-1110, PV-1120, and PV-1230 can be opened. This will allow wastewater to flow through the 20-inch buried forcemain, bypassing the influent chamber and through the 20-inch redundant line. Wastewater would then enter the screenings channel downstream of the influent screens.

There are other maintenance and bypassing options including the following.

- PV-1410 can be utilized to completely drain the influent chamber when the influent chamber is bypassed.
- PV-1430 can be utilized to drain the redundant line. This can be done prior to colder temperatures to winterize the redundant influent line.
- Downstream of PV-1230 is a 20” x 12” tee with a blind flange. This can be utilized as a cleanout for the redundant line.
- PV-1415 and PV-1420 can be utilized to bypass both the original and redundant influent lines.
- PV-1415 and PV-1425 can be utilized once the S&D forcemain is connected in the future.

The redundant influent line layout showing the plug valves and valve schedule with bypassing options are shown in Appendix A.

C. MAINTENANCE

The following are primary maintenance items for the redundant influent line.

- The redundant influent line should be drained prior to the winter months. This will prevent freezing in the piping.

- The radar level sensor should be cleaned regularly to ensure accurate level readings in the influent chamber.
- The SS baffle in the influent chamber should be regularly checked to ensure there is no debris.
- The plug valves should be exercised annually. Exercising the 36-inch buried plug valve should be done during dry weather.

III. VALVES, MAG METER, AND RADAR LEVEL SENSOR

The operation and maintenance of the valves described in this section applies to all valves throughout the system. This above grade and buried valves.

A. ECCENTRIC PLUG VALVES

The buried plug valves throughout the system are gear operated plug valves. Valves that are buried require a 2-inch square nut key to operate. To open the valve, the gear should be turned counterclockwise until the valve is completely open. The valve can be closed by turning the gear clockwise until the valve is closed. Above grade plug valves throughout the system are equipped with a manual hand wheel. The handwheel can be turned completely open or close the valve. There is one electrically actuated valve, PV-1210. This automatically opens and closes based on the water level in the influent chamber. There is also a modulating valve, PV-1220, that partially opens to control the flow through the mag meter. These can be controlled and operated from the WWTF SCADA system.

The eccentric plug valve does not require any routine maintenance. The valve should be cycled from the full open to full closed position on an annual basis to prevent the valve from seizing. Troubleshooting instructions are provided in the Plug Valve Operation and Maintenance Manual.

During a power outage, the modulating valve, PV-1220 and the electrically actuated valve, PV-1210 will need to be manually closed. If there is a power outage and the redundant line is being utilized, the electrically actuated valve, PV-1210, will need to be opened manually.

B. MAG METER

The 20-inch mag meter located on the redundant influent line is a Khrone partial mag meter. The mag meter can operate with a full pipe similar to a typical mag meter and can also operate with a partially full pipe. There is no regular maintenance required for the mag meter. For maintenance information on the mag meter, refer to the Khrone Mag Meter Operation and Maintenance Manual.

C. RADAR LEVEL SENSOR

The radar level sensor is a Vegapuls 6X located above the influent chamber. The sensor measures the wastewater level in the influent chamber to control the actuated plug valve for the redundant influent line. The radar level sensor should be cleaned regularly to ensure accurate level readings in the influent chamber. Refer to the VegaPuls 6X Radar Level Sensor Operation and Maintenance Manual provided by the manufacturer.

IV. APPENDIX A - VALVE LAYOUT, OPERATION, AND SCHEDULE

NOTES:

1. SEE SHEET P601 FOR VALVE AND FITTING INFORMATION.
2. REFER TO E-SHEETS AND SPECIFICATION 22 0533 FOR HEAT TRACING REQUIREMENTS.
3. BURIED DIP SHALL BE RESTRAINED JOINT.
4. ABOVE GRADE DIP SHALL BE FLANGED. SEE STRUCTURAL SHEETS FOR PIPE SUPPORTS.
5. CONTRACTOR TO VERIFY THE LOCATIONS OF PIPE SUPPORTS TO ENSURE THAT NO UTILITY CONFLICTS EXIST WITH PROPOSED LOCATIONS OF PIPE SUPPORT.

(X) SHEET P101 KEY NOTES

(1) EXTEND PIPING TO 4" BELOW GRADE. CAP WITH BLIND FLANGE AND INSTALL NEENAH R-1713 MARKED "SANITARY."

(2) INSTALL RJ CAP. MARK CAP WITH BURIED 4x4 POST EXTENDED JUST BELOW GRADE.

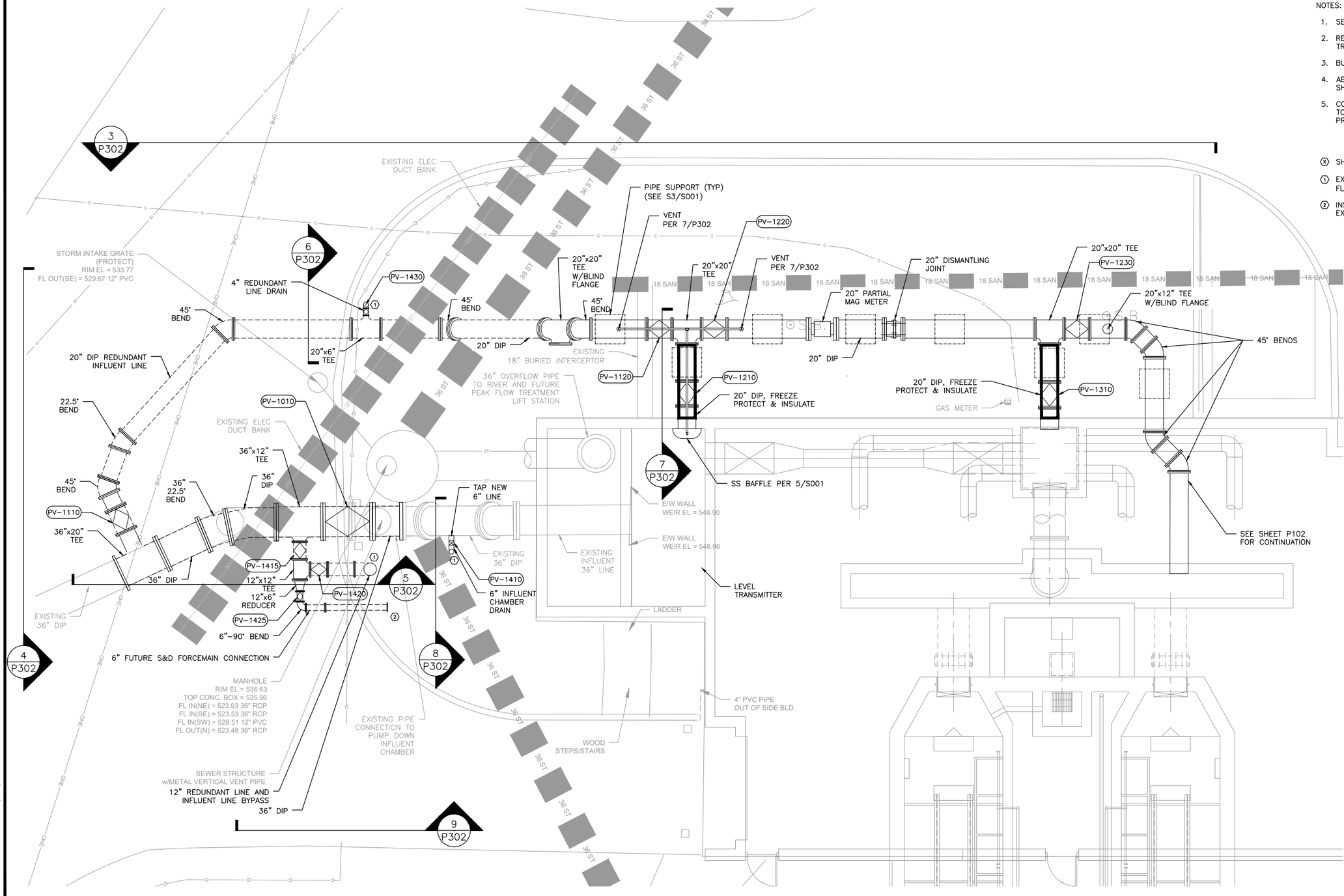

1 PLAN
SCALE: 1"=5'
0 5'

NORTH

12/19/2025 RECORD DRAWINGS

DRAWN BY: JMM	JOB DATE: 2023	BAR IS ONE INCH ON OFFICIAL DRAWINGS.	
APPROVED: MJW	JOB NUMBER: 220608	0 1"	
CAD DATE: 12/19/2025 7:52:57 AM		IF NOT ONE INCH, ADJUST SCALE ACCORDINGLY.	
CAD FILE: J:\2022\220608\CAD\Dwgs\P\P101 PROCESS PLAN.dwg			

NO.	DATE	BY	REVISION DESCRIPTION

HRGreen HRGreen.com

REDUNDANT INFLUENT LINE
WASTEWATER TREATMENT FACILITY
BURLINGTON, IOWA

PROCESS
INFLUENT PIPING – PROCESS PLAN

SHEET NO.
P101

Xrefs: xgt-1-dh01; xc-0-son; XSX-0-P00 reference; xv-Survey-adjusted; XE-1-P01

VALVE NO	LOCATION	SIZE	TYPE	OPERATION	SERVICE	NORMAL OPERATION	HIGH FLOWS INTO INFLUENT CHAMBER	BYPASSING INFLUENT CHAMBER TO SCREENING (3)	BYPASSING INFLUENT CHAMBER & SCREENS(3)	DESCRIPTION
PV-1010	OUTSIDE OF INFLUENT CHAMBER	36-INCH	PLUG VALVE	BURIED, 2-INCH SQ NUT	INFLUENT CHAMBER MAIN LINE	OPEN	OPEN	CLOSED	CLOSED	ONLY CLOSED IF BYPASSING THE INFLUENT CHAMBER
PV-1110	OUTSIDE OF INFLUENT CHAMBER	20-INCH	PLUG VALVE	BURIED, 2-INCH SQ NUT	REDUNDANT LINE INFLUENT CHAMBER BYPASS	CLOSED	CLOSED	OPEN	OPEN	ONLY OPEN WHEN BYPASSING THE INFLUENT CHAMBER
PV-1120	OUTSIDE OF INFLUENT CHAMBER	20-INCH	PLUG VALVE	NON BURIED, MANUAL HANDWHEEL	REDUNDANT LINE INFLUENT CHAMBER BYPASS	CLOSED	CLOSED	OPEN	OPEN	ONLY OPEN WHEN BYPASSING THE INFLUENT CHAMBER
PV-1210	OUTSIDE OF INFLUENT CHAMBER	20-INCH	PLUG VALVE	NON BURIED, ACTUATED, ELECT O/C	INFLUENT CHAMBER REDUNDANT LINE	CLOSED	OPEN (1)	CLOSED (2)	CLOSED (2)	OPENS W/ MODULATING VALVE WHEN INFLUENT CHAMBER REACHES HIGH WATER LEVEL
PV-1220	OUTSIDE OF INFLUENT CHAMBER	20-INCH	PLUG VALVE	NON BURIED, MODULATING, ELECT	INFLUENT CHAMBER REDUNDANT LINE	CLOSED	OPEN (1)	OPEN (1)	OPEN (1)	MODULATES FLOW FROM INFLUENT CHAMBER DURING HIGH WATER
PV-1230	OUTSIDE OF SCREEN BOX	20-INCH	PLUG VALVE	NON BURIED, MANUAL HANDWHEEL	INFLUENT CHAMBER REDUNDANT LINE TO SCREENING CHANNEL	OPEN	OPEN	CLOSED	OPEN (1)	OPENS TO SEND REDUDANT FLOW ABOVE THE SCREENING CAPACITY TO THE SCREENED CHANNEL
PV-1310	OUTSIDE OF SCREEN DISTRIBUTION BOX	20-INCH	PLUG VALVE	NON BURIED, MANUAL HANDWHEEL	INFLUENT CHAMBER REDUNDANT LINE TO SCREENING BOX	CLOSED	CLOSED	OPEN	CLOSED	OPENS TO SEND REDUDANT FLOW BELOW SCREENING CAPACITY TO THE SCREENING BOX
PV-1410	OUTSIDE OF INFLUENT CHAMBER	6-INCH	PLUG VALVE	BURIED, 2-INCH SQ NUT	INFLUENT CHAMBER DRAIN	CLOSED	CLOSED	CLOSED	CLOSED	ONLY OPEN WHEN PUMPING DOWN THE INFLUENT CHAMBER WHILE OFFLINE
PV-1415	OUTSIDE OF INFLUENT CHAMBER	12-INCH	PLUG VALVE	BURIED, 2-INCH SQ NUT	36" INFLUENT CONNECTION TO 12" BYPASS AND 6" S&D FORCEMAIN	OPEN (4)	OPEN (4)	OPEN (4)	OPEN (4)	ONLY OPEN IF OPENING VALVES PV-1420 OR PV-1425. SHALL REMAIN CLOSED UNTIL S&D FORCEMAIN IS INSTALLED OR IF USING PV-1420
PV-1420	OUTSIDE OF INFLUENT CHAMBER	12-INCH	PLUG VALVE	BURIED, 2-INCH SQ NUT	INLFUENT BYPASS FOR BOTH INFLUENT AND REDUNDANT LINES	CLOSED	CLOSED	CLOSED	CLOSED	ONLY OPEN IF INFLUENT CHAMBER AND REDUNDANT LINE ARE OFFLINE. INFLUENT CAN BE PUMPED DOWNSTREAM OF THE SCREENS AND GRIT.
PV-1425	OUTSIDE OF INFLUENT CHAMBER	6-INCH	PLUG VALVE	BURIED, 2-INCH SQ NUT	CONNECTION FOR S&D FORCEMAIN	OPEN (4)	OPEN (4)	OPEN (4)	OPEN (4)	CONNECTS THE S&D LIFT STATION FLOW. SHALL REMAIN CLOSED UNTIL S&D FORCEMAIN IS INSTALLED
PV-1430	OUTSIDE OF INFLUENT CHAMBER	6-INCH	PLUG VALVE	BURIED, 2-INCH SQ NUT	REDUNDANT LINE DRAIN	CLOSED	CLOSED	CLOSED	CLOSED	ONLY OPEN TO DRAIN INFLUENT OR CONDENSATE FROM THE REDUNDANT LINE

WASTEWATER DI FITTING SCHEDULE		
NUMBER	TYPE	NOTE
WWF-1	36"X20" DI MJ RJ TEE	
WWF-2	36"X12" DI MJ RJ TEE	
WWF-3	36", DI MJ RJ SLEEVE	
WWF-4	36", DI MJ RJ SLEEVE	
WWF-5	36" DI MJ RJ 22 DEG BEND	2
WWF-6	20" DI 45 DEG BEND	2
WWF-7	20" DI 22 DEG BEND	2
WWF-8	20" DI 45 DEG BEND	2
WWF-9	20"X6" DI MJ RJ TEE	
WWF-10	20" DI MJ RJ 45 DEG BEND	1
WWF-11	20" DI FLANGED 45 DEG BEND	1
WWF-12	20"X20" DI FLANGED TEE	
WWF-13	20" DI FLANGED DISMANTLING JOINT	
WWF-14	20"X20" DI FLANGED TEE	
WWF-15	20"X20" DI FLANGED TEE	
WWF-16	20"X12" DI FLANGED TEE	
WWF-17	20" DI FLANGED 45 DEG BEND	2
WWF-18	20" DI FLANGED 45 DEG BEND	2
WWF-19	20" DI FLANGED 45 DEG BEND	1, 2
WWF-20	20" DI FLANGED 45 DEG BEND	1, 2
WWF-21	12" DI MJ RJ 90 DEGREE BEND	2
WWF-22	12" DI BLIND FLANGE	
WWF-23	12" x 12" DI MJ RJ TEE	
WWF-24	12" X 6" DI MJ REDUCER	
WWF-25	6" DI MJ RJ 90 DEGREE BEND	1
WWF-26	6" DI MJ RJ 90 DEGREE BEND	2
WWF-27	6" DI MJ RJ 90 DEGREE BEND	1
WWF-28	6" DI BLIND FLANGE	
WWF-29	6" DI MJ RJ 90 DEGREE BEND	1
WWF-30	6"X4" DI MJ RJ REDUCER	
WWF-31	4" DI BLIND FLANGE	
WWF-32	3" DI FLANGED 90 DEGREE BEND	1
WWF-33	3" DI FLANGED 90 DEGREE BEND	1
WWF-34	3" DI FLANGED TEE	
WWF-35	3" DI FLANGED 90 DEGREE BEND	1
WWF-36	3" DI FLANGED 90 DEGREE BEND	1
WWF-37	3" DI FLANGED 90 DEGREE BEND	1
WWF-38	3" DI FLANGED 90 DEGREE BEND	1
NOTES:		
1. VERTICAL BEND		
2. HORIZONTAL BEND		

1 VALVES WILL NEED TO BE MANUALLY CLOSED DURING AN ELECTRICAL OUTAGE
2 VALVES WILL NEED TO BE MANUALLY OPENED DURING AN ELECTRICAL OUTAGE
3 IF THE INFLUENT CHAMBER IS OFFLINE AND NOT ABLE TO TAKE INFLUENT FLOW, ALL VALVES WILL BE CLOSED AND THE LIFT STATIONS WILL SSO.
4 VALVE SHALL REMAIN CLOSED UNTIL THE S&D LINE IS INSTALLED.

12/19/2025 RECORD DRAWINGS

DRAWN BY: JMM JOB DATE: 2023
APPROVED: MJW JOB NUMBER: 220608
CAD DATE: 12/18/2025 11:46:11 PM
CAD FILE: J:\2022\220608\CAD\Dwgs\P\P601.dwg

BAR IS ONE INCH ON OFFICIAL DRAWINGS.
0 1"
IF NOT ONE INCH, ADJUST SCALE ACCORDINGLY.

NO.	DATE	BY	REVISION DESCRIPTION

HRGreen HRGreen.com

REDUNDANT INFLUENT LINE
WASTEWATER TREATMENT FACILITY
BURLINGTON, IOWA

PROCESS
VALVE & FITTING SCHEDULE

SHEET NO.
P601

Xrefs: xg1-1-db01

V. APPENDIX B – HYDRAULIC PROFILE

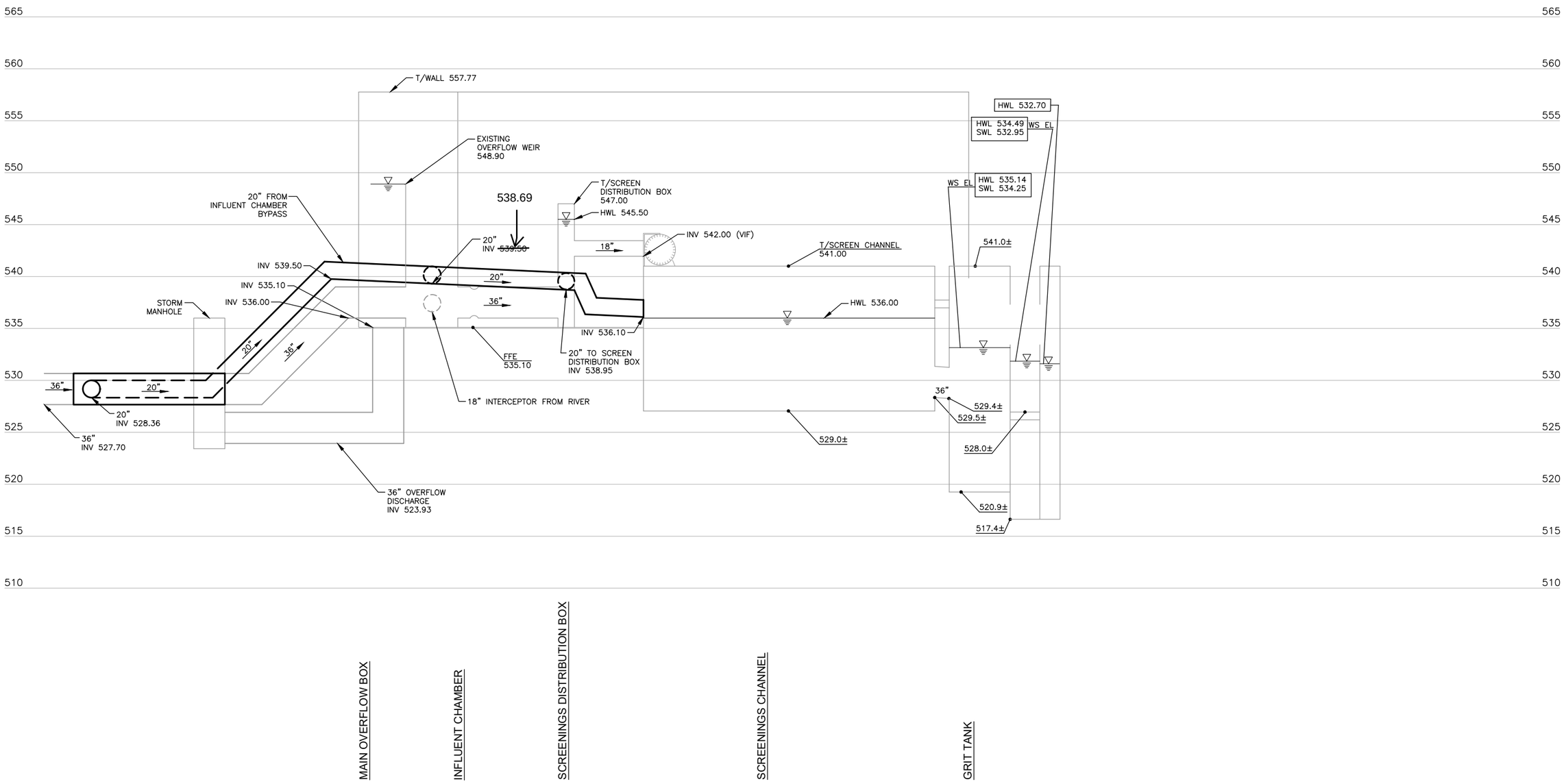

NOTE: USGS PLAN ELEVATION=511.45 RIVER STAGE

12/19/2025 RECORD DRAWINGS

Xrefs: xgt-1-dh01

DRAWN BY: JMM	JOB DATE: 2023	BAR IS ONE INCH ON OFFICIAL DRAWINGS. 0 1"	
APPROVED: MJW	JOB NUMBER: 220608	IF NOT ONE INCH, ADJUST SCALE ACCORDINGLY.	
CAD DATE: 12/18/2025 11:40:05 PM			
CAD FILE: J:\2022\220608\CAD\Dwgs\G\G102 EXISTING HYDRAULIC PROFILE.dwg			

NO.	DATE	BY	REVISION DESCRIPTION

HRGreen HRGreen.com

REDUNDANT INFLUENT LINE
WASTEWATER TREATMENT FACILITY
BURLINGTON, IOWA

GENERAL
HYDRAULIC PROFILE

SHEET NO.
G102

VI. APPENDIX C – PROCESS FLOW DIAGRAM

SYMBOL LEGEND

- MAGMETER
- PLUG VALVE
- DIRECTION OF FLOW
- BUTTERFLY VALVE
- GATE VALVE
- TELESCOPING VALVE
- CHECK VALVE

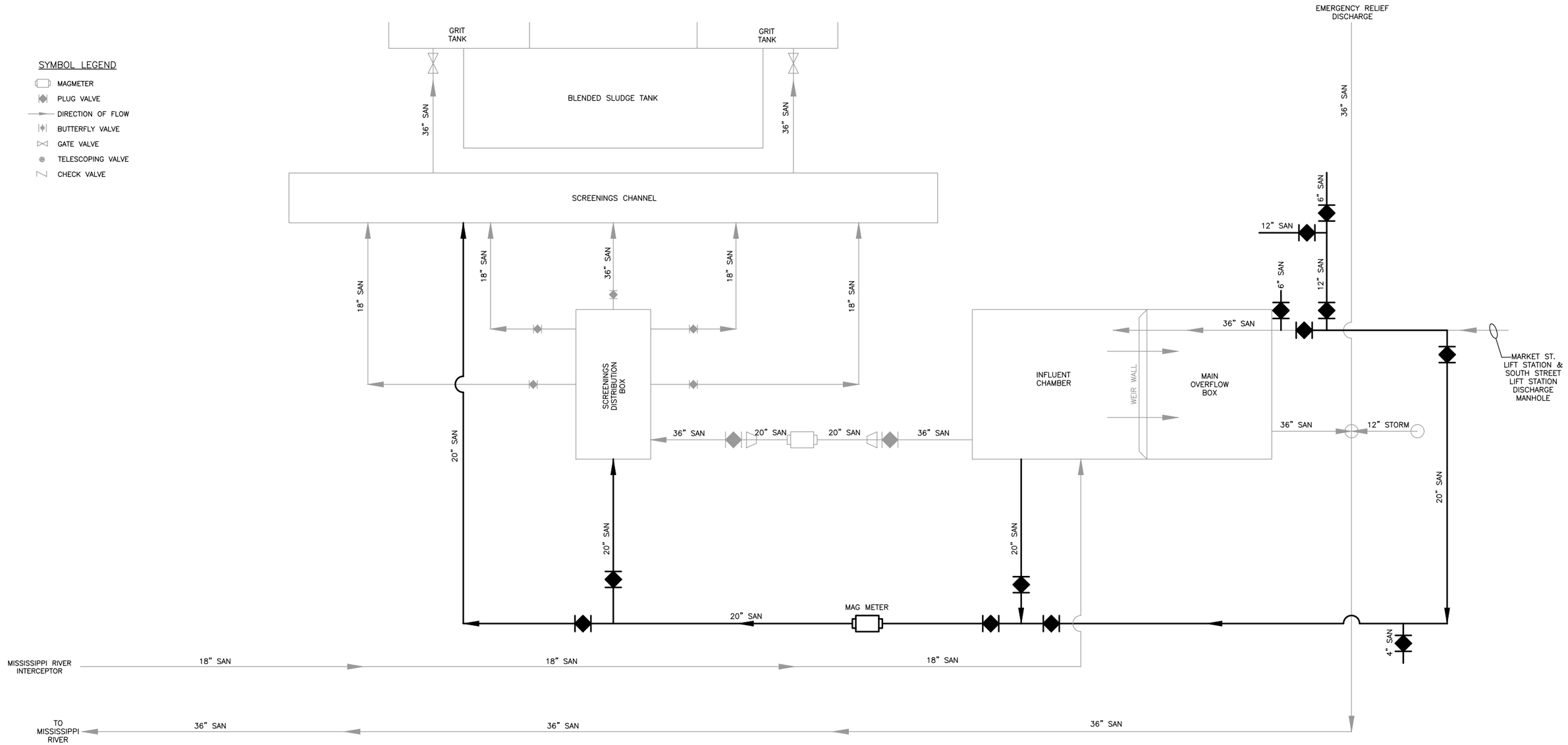

1 HEADWORKS PROCESS SCHEMATIC
NTS

NOTE:

EXISTING FLOW DIAGRAM BASED ON CLIENT PROVIDED DRAWINGS. CONTRACTOR SHALL FIELD VERIFY CONDITIONS PRIOR TO BIDDING AND CONSTRUCTION.

12/19/2025 RECORD DRAWINGS

DRAWN BY: JMM	JOB DATE: 2023	BAR IS ONE INCH ON OFFICIAL DRAWINGS. 0 1"	
APPROVED: MJW	JOB NUMBER: 220608	IF NOT ONE INCH, ADJUST SCALE ACCORDINGLY.	
CAD DATE: 12/18/2025 11:39:40 PM			
CAD FILE: J:\2022\220608\CAD\Dwgs\G\G101 HEADWORKS PROCESS FLOW DIAGRAM.dwg			

NO.	DATE	BY	REVISION DESCRIPTION

HRGreen.com
HRGreen

REDUNDANT INFLUENT LINE
WASTEWATER TREATMENT FACILITY
BURLINGTON, IOWA

GENERAL
HEADWORKS PROCESS FLOW DIAGRAM

SHEET NO.
G101

Xrefs: xg-1-dh01