IOWA DEPARTMENT OF NATURAL RESOURCES

CONSTRUCTION DOCUMENTS
BOONE FORKS CANOE RAMP PROJECT
BOONE FORKS WILDLIFE AREA
WEBSTER COUNTY, IOWA

DNR PROJECT #15-02-94-08

IOWA ONE CALL
1-800-292-8989
www.iowaonecall.com
811

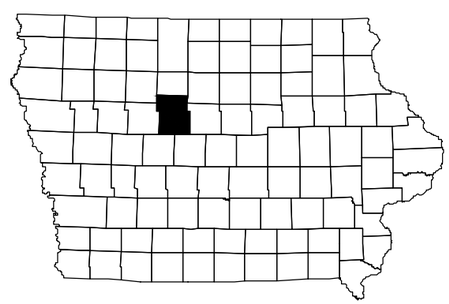

LICENSED PROFESSIONAL ENGINEER
BRETT A. JOHNSON
13653
IOWA

I HEREBY CERTIFY THAT THIS ENGINEERING DOCUMENT WAS PREPARED BY ME OR UNDER MY DIRECT PERSONAL SUPERVISION AND THAT I AM A DULY LICENSED PROFESSIONAL ENGINEER UNDER THE LAWS OF THE STATE OF IOWA.

BRETT A. JOHNSON, IOWA REG. NO. 13653 DATE
MY LICENSE RENEWAL DATE IS DECEMBER 31, 2019

PAGES OR SHEETS COVERED BY THIS SEAL:
SHEETS 1-16

DIRECTORY

PROJECT MANAGER		CONSTRUCTION INSPECTOR	
COMPANY	IOWA DEPARTMENT OF NATURAL RESOURCES	COMPANY	IOWA DEPARTMENT OF NATURAL RESOURCES
ADDRESS	502 EAST 9TH STREET	ADDRESS	502 EAST 9TH STREET
CITY,STATE,ZIP	DES MOINES, IA 50319	CITY,STATE,ZIP	DES MOINES, IA 50319
CONTACT	BRETT JOHNSON	CONTACT	DON LABATE
TELEPHONE	515-250-3711	TELEPHONE	515-250-3714
FAX	515-281-8685	FAX	
EMAIL	brett.johnson@dnr.iowa.gov	EMAIL	don.labate@dnr.iowa.gov

PROJECT DESCRIPTION

THIS PROJECT CONSISTS OF INSTALLING A PORTLAND CEMENT CONCRETE CANOE RAMP. ON THE BOONE RIVER LOCATED IN WEBSTER COUNTY, IOWA AND INCLUDES GRADING, PLACING RIPRAP ALONG RIVER BANKS, AND INSTALLING REINFORCED PORTLAND CEMENT CONCRETE CANOE ACCESS RAMP ONTO THE BOONE RIVER.

AUTHORIZATION TO BID

AUTHORIZATION-PARKS | WILDLIFE | FISHERIES | LAW ENFORCEMENT | FORESTRY DATE

ENGINEERING BUREAU CHIEF DATE

SHEET INDEX

1	COVER SHEET
2	VICINITY MAPS
3	QUANTITIES & GENERAL NOTES
4	SURVEY CONTROL
5	CLEARING & GRUBBING PLAN
6	SITE PLAN
7	GRADING PLAN
8	RAMP PROFILE SHEET
9	RAMP DETAIL SHEET
10	RAMP REINFORCING DETAILS
11	ROCK VANE DETAILS
12	CUL-DE-SAC EDGE CONTROL
13	PARKING AREAS EDGE CONTROL
14	PARKING SIGNAGE & GUARDRAIL
15	GUARDRAIL DETAILS
16	GUARDRAIL DETAILS

CONSULTANT:

IOWA DEPARTMENT OF NATURAL RESOURCES
ENGINEERING SERVICES - WALLACE BUILDING
502 E. 9TH ST. DES MOINES, IA 50319-0034

COVER SHEET
CONSTRUCTION PROJECT FOR:
BOONE FORKS CANOE RAMP
WEBSTER COUNTY, IOWA

NO.	BY	DATE	REVISION

DRAWN BY:
PROJECT NUMBER: 15-02-94-08
CHK'D BY:
DATE: 06/27/2018
SHEET No: 1

SITE LOCATION

BOONE FORKS CANOE RAMP LOCATION:
LATITUDE: 42°18'44.99"N
LONGITUDE: 93°55'59.78"W

CONSULTANT:

IOWA DEPARTMENT OF NATURAL RESOURCES

ENGINEERING SERVICES - WALLACE BUILDING
502 E. 9TH ST. DES MOINES, IA 50319-0034

VICINITY MAP

CONSTRUCTION PROJECT FOR:
BOONE FORKS CANOE RAMP
WEBSTER COUNTY, IOWA

NO.	BY / DATE	REVISION

DRAWN BY:
PROJECT NUMBER: 15-02-94-08
CHKD BY:
DATE: 06/27/2018
SHEET No: 2

ESTIMATED PROJECT QUANTITIES

ITEM NO.	ITEM	UNIT	TOTAL
1	CLEARING AND GRUBBING	LS	1
2	GRADING	LS	1
3	SUBGRADE PREPARATION	SY	120
4	GRANULAR SUBBASE	TONS	28.4
5	CLASS 'A' CRUSHED STONE	TONS	176
6	MACADAM STONE	TONS	13
7	CRUSHED BRICK CHIPS	TONS	65
8	CLASS 'D' RIPRAP	TONS	500
9	GROOVED REINFORCED PCC CANOE LAUNCH RAMP	SY	44.5
10	6-INCH REINFORCED PCC PAVEMENT	SY	100
11	8-INCH FILTER SOCK	LF	100
12	SEEDING, FERTILIZING AND MULCHING	AC	0.2
13	STEEL BEAM GUARDRAIL W-BEAM SECTIONS	EA	2
14	STEEL BEAM GUARDRAIL END ANCHOR, W-BEAM	EA	4
15	SIGNAGE	LS	1
16	MOBILIZATION	LS	1

GENERAL NOTES

1. TWO WEEKS PRIOR TO CONSTRUCTION THE CONTRACTOR SHALL NOTIFY:
   A. IOWA DNR PROJECT MANAGER: BRETT JOHNSON 515-250-3711
   B. DISTRICT INSPECTOR: DON LABATE 515-250-3714
2. ALL CONSTRUCTION SHALL BE IN ACCORDANCE WITH STATEWIDE URBAN STANDARD DESIGN SPECIFICATIONS FOR PUBLIC IMPROVEMENTS (SUDAS). ALL CONSTRUCTION TESTING TO BE IN ACCORDANCE WITH SUDAS AND IS THE EXPENSE OF THE CONTRACTORS.
3. THE CONTRACTOR SHALL VERIFY THE EXISTING CONDITIONS PRIOR TO THE START OF CONSTRUCTION AND NOTIFY THE ABOVE MENTIONED CONTACTS OF ANY DISCREPANCIES.
4. THE LOCATIONS AND DIMENSIONS SHOWN ON THE PLANS FOR EXISTING FACILITIES ARE IN ACCORDANCE WITH AVAILABLE INFORMATION WITHOUT UNCOVERING AND MEASURING. THE ENGINEER DOES NOT GUARANTEE THE ACCURACY OF THIS INFORMATION OR THAT ALL EXISTING UNDERGROUND FACILITIES ARE SHOWN. IT IS THE RESPONSIBILITY OF THE CONTRACTOR TO CONTACT ALL PUBLIC AND/OR PRIVATE UTILITIES SERVING THE AREA TO DETERMINE THE PRESENT EXTENT AND LOCATION OF THEIR FACILITIES BEFORE BEGINNING WORK.
5. THE CONTRACTOR IS REQUIRED TO TAKE DUE PRECAUTIONARY MEASURES TO PROTECT THE UTILITIES OR STRUCTURES AT THE SITE. IT SHALL BE THE CONTRACTOR'S RESPONSIBILITY TO NOTIFY THE PROPER UTILITY IMMEDIATELY UPON BREAKING OR DAMAGE TO ANY UTILITY LINE OR APPURTENANCE, OR THE INTERRUPTION OF THEIR SERVICE. HE SHALL NOTIFY THE PROPER UTILITY INVOLVED. IF EXISTING UTILITY LINES ARE ENCOUNTERED THAT CONFLICT IN LOCATION WITH NEW CONSTRUCTION, THE CONTRACTOR SHALL NOTIFY THE ENGINEER SO THAT THE CONFLICT CAN BE RESOLVED.
6. CONTRACTOR TO PROTECT ALL UTILITY, PAVING, BUILDINGS, ETC. OUTSIDE OF LIMITS OF PROPOSED CONSTRUCTION.
7. IN THE EVENT THAT THERE IS A DISCREPANCY BETWEEN THE QUANTITIES AND THE PLANS, THE DETAILED PLANS SHALL GOVERN.
8. CONTRACTOR SHALL SEED/MULCH ALL DISTURBED AREAS. USE TYPE 2 (PERMANENT COOL SEASON MIXTURE) SEED MIX.
9. MAINTAIN ALL CUT AND FILL AREAS TO ACCOMMODATE SURFACE DRAINAGE.
10. FINISHED GRADE ON ALL NON-PAVED AREAS SHALL BE WITHIN 0.20 FOOT OF PLAN GRADE. PAVED AREAS SHALL BE WITHIN 0.10 FOOT.
11. TOPSOIL SHALL BE SPREAD TO A MINIMUM THICKNESS OF 6-INCHES ON ALL DISTURBED UNPAVED AREAS.
12. BACKFILL TO THE TOP OF ALL ROCK OR PAVED SURFACES.
13. ALL ELEVATIONS ARE TO THE GUTTER GRADE UNLESS NOTED OTHERWISE.
14. PROTECT ALL EXISTING TREES AND VEGETATION UNLESS OTHERWISE NOTED.
15. CONSTRUCTION IS TO BE COMPLETED BY MAY 30, 2019.
16. CONTRACTOR TO COORDINATE STAGING AREA WITH INSPECTOR.
17. THE IOWA DNR WILL PROVIDE THE CONSTRUCTION SURVEY STAKING FOR THIS PROJECT.

ESTIMATE REFERENCE INFORMATION

ITEM NO.	DESCRIPTION
1	CLEARING & GRUBBING A. CONTRACTOR TO CLEAR AND GRUB THE PROJECT SITE. SEE SHEET #5 FOR CLEARING DETAILS.
2	GRADING A. CONTRACTOR TO GRADE THE SITE AS DETAILED IN THE PLANS. THERE IS A TOTAL CUT/FILL OF ABOUT 150 CY.
3	SUBGRADE PREPARATION A. CONTRACTOR SHALL COMPACT THE SUBGRADE FOR THE PAVEMENT IN ACCORDANCE TO SUDAS. B. SUBGRADE PREPARATION SHALL EXTEND 1-FOOT BEYOND THE EDGE OF PAVEMENT ABOVE THE GROOVED RAMP LOCATION.
4	GRANULAR SUBBASE A. CONTRACTOR TO INSTALL 6-INCH GRANULAR BASE FOR PAVEMENT AREAS. BASE IS TO EXTEND 1-FOOT BEYOND EDGE OF PAVEMENTS. CONTRACTOR TO COMPACT IN ACCORDANCE WITH SUDAS. SEE SHEETS #6 & 9 FOR DETAILS.
5	CLASS 'A' CRUSHED STONE A. CONTRACTOR SHALL PLACE AND COMPACT A 6-INCH DEPTH BASE BELOW THE BOAT RAMP PAVEMENT (60 LF) AS DETAILED ON SHEETS #8 & 9. STONE SHALL ALSO BE PLACED IN THE EXISTING CUL-DE-SAC AT A DEPTH OF BETWEEN 3 AND 6-INCHES AND ALSO AN AREA ADJACENT TO THE CUL-DE-SAC BETWEEN THE PARKING AREAS AS SHOWN ON SHEET #12.
6	MACADAM STONE A. CONTRACTOR SHALL PLACE AND COMPACT A 6-INCH DEPTH MACADAM BASE BELOW THE CRUSHED STONE BASE FOR THE 40-FOOT PANEL LENGTH THAT WILL BE UNDERWATER AS DETAILED ON SHEETS #8 & 9.
7	CRUSHED BRICK CHIPS A. CONTRACTOR SHALL PLACE CRUSHED BRICK CHIPS IN PARKING AREAS AT A DEPTH OF 6-INCHES AS DETAILED ON SHEETS #6 & 13.
8	CLASS 'D' RIPRAP A. CONTRACTOR SHALL PLACE CLASS 'D' RIPRAP IN AREAS OF FILL UNDER THE BOAT RAMP TO ACHIEVE THE PROPER SUBGRADE ELEVATIONS AND ALONG THE SIDES AND END OF THE RAMP AS DETAILED IN THE PLANS ON SHEETS #7-9. RIPRAP SHALL ALSO BE PLACED ALONG BANKS NORTH AND SOUTH OF RAMP FOR BANK PROTECTION AND FOR THE ROCK VANE AS DETAILED ON SHEET #11.
9	GROOVED REINFORCED CANOE LAUNCH RAMP A. CONTRACTOR TO INSTALL 10'x40' REINFORCED PCC (CLASS 'C') CANOE LAUNCH RAMP AS DETAILED IN THE PLANS ON SHEETS #8 & 9. RAMP SHALL HAVE A GROOVED FINISH AS SHOWN SHEET #10 FOR TRACTION.
10	6-INCH REINFORCED PCC PAVEMENT A. CONTRACTOR TO INSTALL 6-INCH REINFORCED CLASS 'C' PCC PAVEMENT AS DETAILED IN THE PLANS ON SHEETS #6, 8, 9 AND 10.
11	8-INCH FILTER SOCK A. CONTRACTOR SHALL INSTALL 8-INCH FILTER SOCK AS DETAILED ON SHEET #7. ADDITIONAL FILTER SOCK MAY BE REQUIRED BY THE DNR INSPECTOR TO CONTROL EROSION.
12	SEEDING, FERTILIZING & MULCHING A. THE CONTRACTOR SHALL SEED, FERTILIZE & MULCH ALL DISTURBED AREAS. SEED WITH TYPE 2 SEED MIXTURE (PERMANENT COOL SEASON MIXTURE). SEEDING DATES: 3/1-5/31 AND 8/10-9/30.
13	STEEL BEAM GUARDRAIL W-BEAM SECTIONS A. CONTRACTOR TO INSTALL STEEL BEAM GUARDRAIL W-BEAM SECTIONS INCLUDING ALL WOODEN POSTS, BLOCKOUTS AND HARDWARE, 12.5' IN LENGTH AS DETAILED ON SHEETS #6, 14, & 15.
14	STEEL BEAM GUARDRAIL END ANCHOR, W-BEAM A. CONTRACTOR TO INSTALL STEEL BEAM GUARDRAIL W-BEAM SECTIONS INCLUDING ALL WOODEN POSTS, BLOCKOUTS AND HARDWARE, 12.5' IN LENGTH AS DETAILED ON SHEETS #6, 14, AND 16.
15	SIGNAGE A. CONTRACTOR TO INSTALL SIGNAGE AS DETAILED ON SHEETS #6 & 14. THERE ARE (2) PARKING AREA SIGNS, (2) PARALLEL PARKING SIGNS AND THE RE-INSTALLATION OF THE EXISTING RAMP SIGNAGE. ALL SIGNAGE TO BE ATTACHED TO 'U' CHANNEL POST (2LBS/FT).
16	MOBILIZATION A. COST OF MOBILIZATION.

CONSULTANT:

IOWA DEPARTMENT OF NATURAL RESOURCES

ENGINEERING SERVICES - WALLACE BUILDING
502 E. 9TH ST. DES MOINES, IA 50319-0034

QUANTITIES & GENERAL NOTES

CONSTRUCTION PROJECT FOR:
BOONE FORKS CANOE RAMP
WEBSTER COUNTY, IOWA

NO.	BY DATE	REVISION

DRAWN BY:
PROJECT NUMBER: 15-02-94-08
CHK'D BY:
DATE: 06/27/2018
SHEET No: 3

SURVEY CONTROL

SURVEY CONTROL POINT #1

N:	3577342.4220
E:	4803951.1520
ELEV:	925.562
NAIL	

SURVEY CONTROL POINT #2

N:	3577119.8380
E:	4804299.9220
ELEV:	925.554
NAIL	

N

0 FEET 40

CONSULTANT:

IOWA DEPARTMENT OF NATURAL RESOURCES

ENGINEERING SERVICES - WALLACE BUILDING
502 E. 9TH ST. DES MOINES, IA 50319-0034

SURVEY CONTROL

CONSTRUCTION PROJECT FOR:
BOONE FORKS CANOE RAMP

WEBSTER COUNTY, IOWA

NO.	BY DATE	REVISION

DRAWN BY:
PROJECT NUMBER: 15-02-94-08
CHK'D BY:
DATE: 06/27/2018
SHEET No: 4

CLEARING & GRUBBING NOTES

1. CONTRACTOR TO CLEAR AND GRUB THE PROJECT AREA AND REMOVE ITEMS AS DESCRIBED ON THIS SHEET.
2. CONTRACTOR TO DISPOSE OF REMOVED ITEMS OFF-SITE IN ACCORDANCE WITH STANDARD RULES AND REGULATIONS.

N

0 30
FEET

CONSULTANT:

IOWA DEPARTMENT OF NATURAL RESOURCES

ENGINEERING SERVICES - WALLACE BUILDING
502 E. 9TH ST. DES MOINES, IA 50319-0034

CLEARING & GRUBBING

CONSTRUCTION PROJECT FOR:

BOONE FORKS CANOE RAMP

WEBSTER COUNTY, IOWA

NO.	BY DATE	REVISION

DRAWN BY:
PROJECT NUMBER: 15-02-94-08
CHK'D BY:
DATE: 06/27/2018
SHEET No: 5

GENERAL NOTES

1. TWO WEEKS PRIOR TO CONSTRUCTION THE CONTRACTOR SHALL NOTIFY:
   A. IOWA DNR PROJECT MANAGER: BRETT JOHNSON 515-250-3711
   B. DISTRICT INSPECTOR: DON LABATE 515-250-3714
2. ALL CONSTRUCTION SHALL BE IN ACCORDANCE WITH STATEWIDE URBAN STANDARD DESIGN SPECIFICATIONS FOR PUBLIC IMPROVEMENTS (SUDAS). ALL CONSTRUCTION TESTING TO BE IN ACCORDANCE WITH SUDAS AND IS THE EXPENSE OF THE CONTRACTORS.
3. THE CONTRACTOR SHALL VERIFY THE EXISTING CONDITIONS PRIOR TO THE START OF CONSTRUCTION AND NOTIFY THE ABOVE MENTIONED CONTACTS OF ANY DISCREPANCIES.
4. THE LOCATIONS AND DIMENSIONS SHOWN ON THE PLANS FOR EXISTING FACILITIES ARE IN ACCORDANCE WITH AVAILABLE INFORMATION WITHOUT UNCOVERING AND MEASURING. THE ENGINEER DOES NOT GUARANTEE THE ACCURACY OF THIS INFORMATION OR THAT ALL EXISTING UNDERGROUND FACILITIES ARE SHOWN. IT IS THE RESPONSIBILITY OF THE CONTRACTOR TO CONTACT ALL PUBLIC AND/OR PRIVATE UTILITIES SERVING THE AREA TO DETERMINE THE PRESENT EXTENT AND LOCATION OF THEIR FACILITIES BEFORE BEGINNING WORK.
5. THE CONTRACTOR IS REQUIRED TO TAKE DUE PRECAUTIONARY MEASURES TO PROTECT THE UTILITIES OR STRUCTURES AT THE SITE. IT SHALL BE THE CONTRACTOR'S RESPONSIBILITY TO NOTIFY THE PROPER UTILITY IMMEDIATELY UPON BREAKING OR DAMAGE TO ANY UTILITY LINE OR APPURTENANCE, OR THE INTERRUPTION OF THEIR SERVICE. HE SHALL NOTIFY THE PROPER UTILITY INVOLVED. IF EXISTING UTILITY LINES ARE ENCOUNTERED THAT CONFLICT IN LOCATION WITH NEW CONSTRUCTION, THE CONTRACTOR SHALL NOTIFY THE ENGINEER SO THAT THE CONFLICT CAN BE RESOLVED.
6. CONTRACTOR TO PROTECT ALL UTILITY, PAVING, BUILDINGS, ETC. OUTSIDE OF LIMITS OF PROPOSED CONSTRUCTION.
7. IN THE EVENT THAT THERE IS A DISCREPANCY BETWEEN THE QUANTITIES AND THE PLANS, THE DETAILED PLANS SHALL GOVERN.
8. CONTRACTOR SHALL SEED/MULCH ALL DISTURBED AREAS. USE TYPE 2 (COOL SEASON MIXTURE) SEED MIX.
9. MAINTAIN ALL CUT AND FILL AREAS TO ACCOMMODATE SURFACE DRAINAGE.
10. FINISHED GRADE ON ALL NON-PAVED AREAS SHALL BE WITHIN 0.20 FOOT OF PLAN GRADE. PAVED AREAS SHALL BE WITHIN 0.10 FOOT.
11. TOPSOIL SHALL BE SPREAD TO A MINIMUM THICKNESS OF 6-INCHES ON ALL DISTURBED UNPAVED AREAS.
12. BACKFILL TO THE TOP OF ALL ROCK OR PAVED SURFACES.
13. ALL ELEVATIONS ARE TO THE GUTTER GRADE UNLESS NOTED OTHERWISE.
14. PROTECT ALL EXISTING TREES AND VEGETATION UNLESS OTHERWISE NOTED.
15. ALL JOINTS TO BE TYPE 'C' & 'E' (SEE PLAN) AND SHALL BE SEALED.
16. GRANULAR SUBBASE SHALL BE IN ACCORDANCE WITH IDOT SECTION 4121.
17. THE CLASS 'D' RIPRAP THAT WILL BE PLACED NEXT TO THE CANOE RAMP FOR THE 2-FOOT SHOULDER AND AT THE END OF THE RAMP SHALL BE ARRANGED SUCH THAT IT IS A FAIRLY LEVEL SURFACE FOR CANOEISTS SHOULD THEY STEP OFF THE RAMP AND ONTO THE RIPRAP.

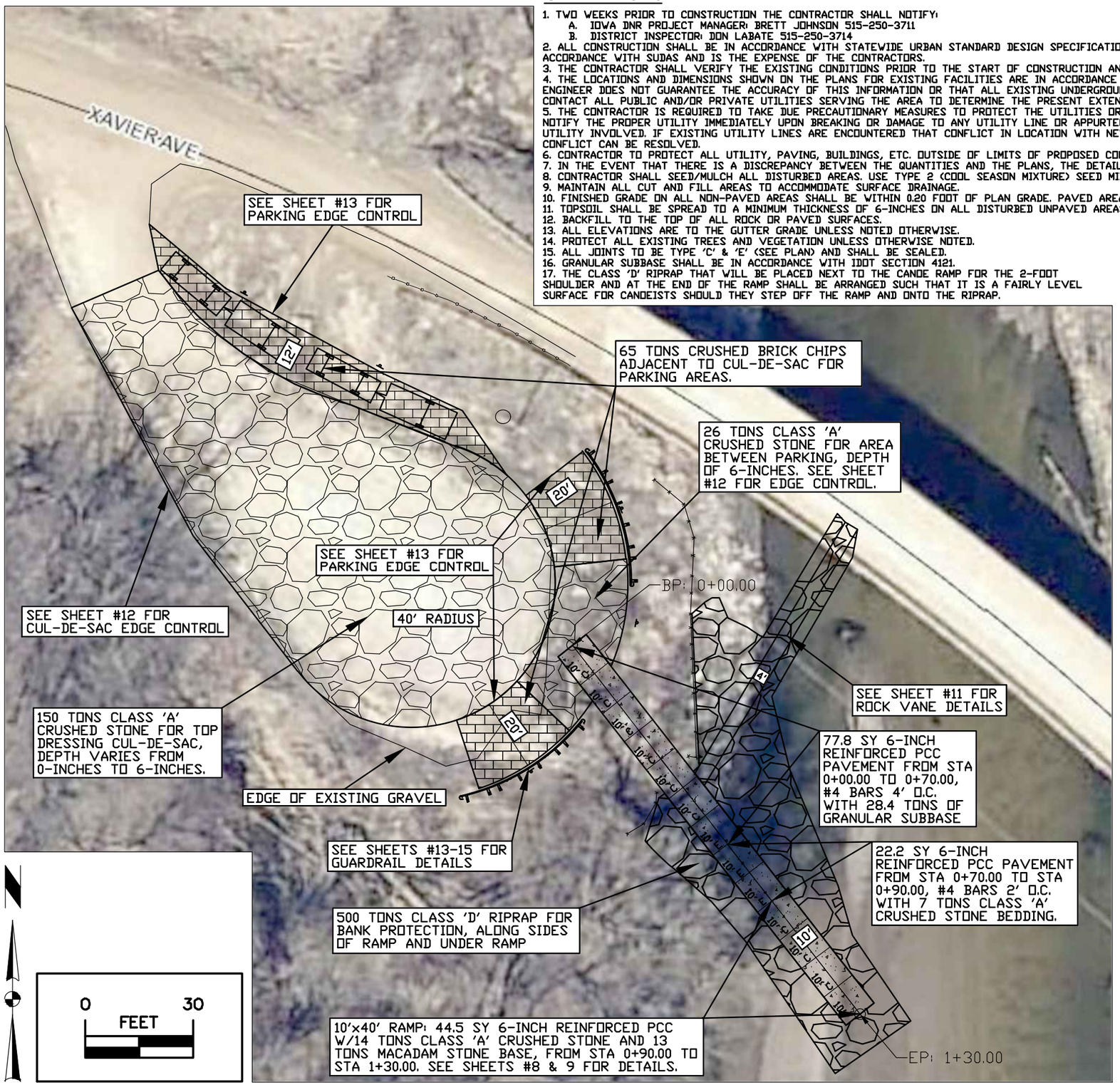

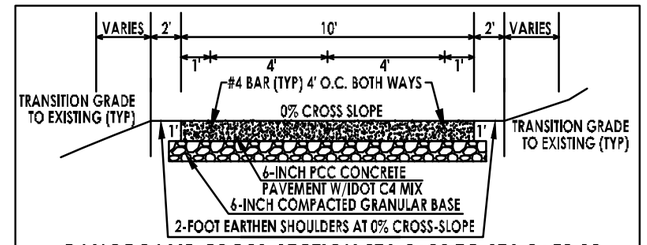

CANOE RAMP CROSS-SECTION STA 0+00 TO STA 0+50.00

NO SCALE

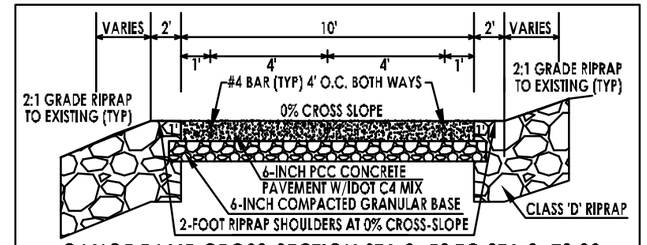

CANOE RAMP CROSS-SECTION STA 0+50 TO STA 0+70.00

NO SCALE

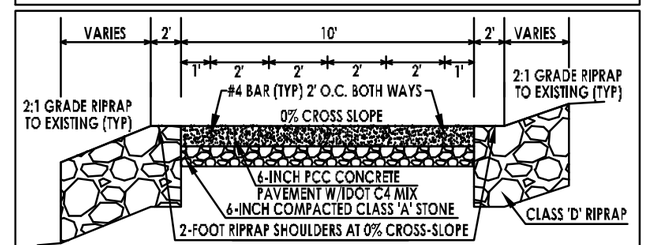

CANOE RAMP CROSS-SECTION STA 0+70.00 TO STA 0+90.00

NO SCALE

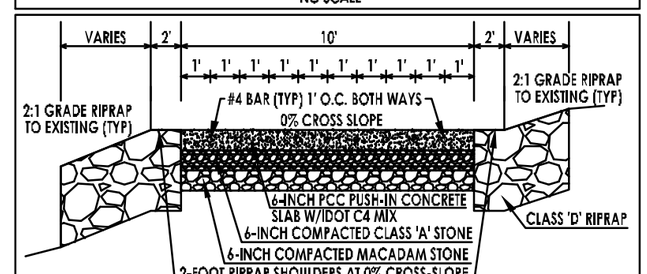

CANOE RAMP CROSS-SECTION STA 0+90.00 TO STA 1+30.00

NO SCALE

CONSULTANT:

IOWA DEPARTMENT OF NATURAL RESOURCES

ENGINEERING SERVICES - WALLACE BUILDING
502 E. 9TH ST. DES MOINES, IA 50319-0034

SITE PLAN

CONSTRUCTION PROJECT FOR:

BOONE FORKS CANOE RAMP

WEBSTER COUNTY, IOWA

NO.	BY DATE	REVISION

DRAWN BY:

PROJECT NUMBER: 15-02-94-08

CHK'D BY:

DATE: 06/27/2018

SHEET No: 6

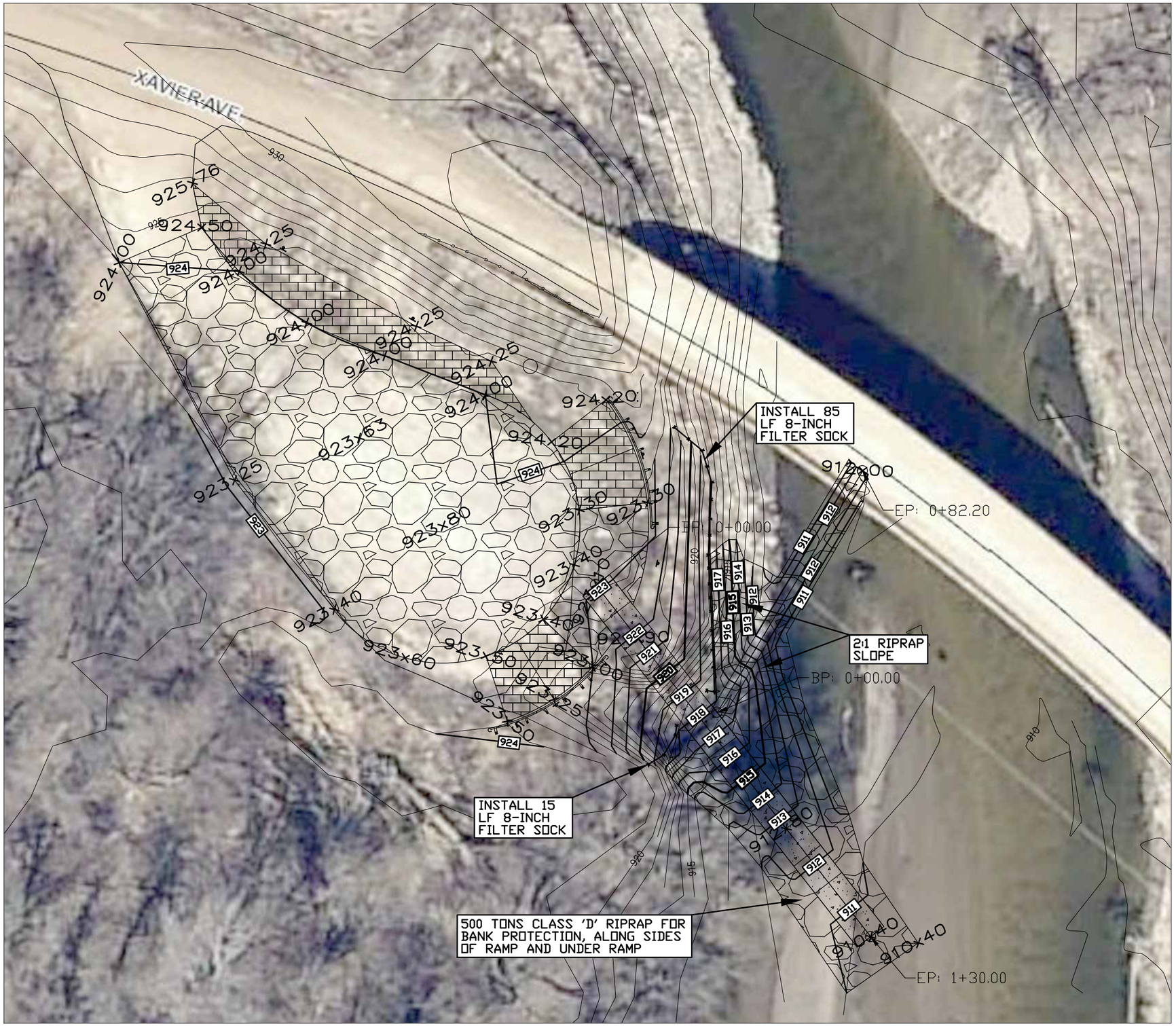

GRADING NOTES

1. TWO WEEKS PRIOR TO CONSTRUCTION THE CONTRACTOR SHALL NOTIFY:
   A. IOWA DNR PROJECT MANAGER: BRETT JOHNSON 515-250-3711
   B. DISTRICT INSPECTOR: DON LABATE 515-250-3714
2. ALL CONSTRUCTION SHALL BE IN ACCORDANCE WITH STATEWIDE URBAN STANDARD DESIGN SPECIFICATIONS FOR PUBLIC IMPROVEMENTS (SUDAS). ALL CONSTRUCTION TESTING TO BE IN ACCORDANCE WITH SUDAS AND IS THE EXPENSE OF THE CONTRACTORS.
3. THE CONTRACTOR SHALL VERIFY THE EXISTING CONDITIONS PRIOR TO THE START OF CONSTRUCTION AND NOTIFY THE ABOVE MENTIONED CONTACTS OF ANY DISCREPANCIES.
4. THE LOCATIONS AND DIMENSIONS SHOWN ON THE PLANS FOR EXISTING FACILITIES ARE IN ACCORDANCE WITH AVAILABLE INFORMATION WITHOUT UNCOVERING AND MEASURING. THE ENGINEER DOES NOT GUARANTEE THE ACCURACY OF THIS INFORMATION OR THAT ALL EXISTING UNDERGROUND FACILITIES ARE SHOWN. IT IS THE RESPONSIBILITY OF THE CONTRACTOR TO CONTACT ALL PUBLIC AND/OR PRIVATE UTILITIES SERVING THE AREA TO DETERMINE THE PRESENT EXTENT AND LOCATION OF THEIR FACILITIES BEFORE BEGINNING WORK.
5. THE CONTRACTOR IS REQUIRED TO TAKE DUE PRECAUTIONARY MEASURES TO PROTECT THE UTILITIES OR STRUCTURES AT THE SITE. IT SHALL BE THE CONTRACTOR'S RESPONSIBILITY TO NOTIFY THE PROPER UTILITY IMMEDIATELY UPON BREAKING OR DAMAGE TO ANY UTILITY LINE OR APPURTENANCE, OR THE INTERRUPTION OF THEIR SERVICE. HE SHALL NOTIFY THE PROPER UTILITY INVOLVED. IF EXISTING UTILITY LINES ARE ENCOUNTERED THAT CONFLICT IN LOCATION WITH NEW CONSTRUCTION, THE CONTRACTOR SHALL NOTIFY THE ENGINEER SO THAT THE CONFLICT CAN BE RESOLVED.
6. CONTRACTOR TO PROTECT ALL UTILITY, PAVING, BUILDINGS, ETC. OUTSIDE OF LIMITS OF PROPOSED CONSTRUCTION.
7. IN THE EVENT THAT THERE IS A DISCREPANCY BETWEEN THE QUANTITIES AND THE PLANS, THE DETAILED PLANS SHALL GOVERN.
8. CONTRACTOR SHALL SEED/MULCH ALL DISTURBED AREAS (APPROXIMATELY 0.2 ACRE). USE TYPE 2 (PERMANENT COOL SEASON MIXTURE) SEED MIX.
9. MAINTAIN ALL CUT AND FILL AREAS TO ACCOMMODATE SURFACE DRAINAGE.
10. FINISHED GRADE ON ALL NON-PAVED AREAS SHALL BE WITHIN 0.20 FOOT OF PLAN GRADE. PAVED AREAS SHALL BE WITHIN 0.10 FOOT.
11. TOPSOIL SHALL BE SPREAD TO A MINIMUM THICKNESS OF 6-INCHES ON ALL DISTURBED UNPAVED AREAS.
12. BACKFILL TO THE TOP OF ALL ROCK OR PAVED SURFACES.
13. ALL ELEVATIONS ARE TO THE GUTTER GRADE UNLESS NOTED OTHERWISE.
14. EARTHWORK QUANTITY IS ROUGHLY 150 CY.
15. THE CLASS 'D' RIPRAP THAT WILL BE PLACED NEXT TO THE CANOE RAMP FOR THE 2-FOOT SHOULDER AND AT THE END OF THE RAMP SHALL BE ARRANGED SUCH THAT IT IS A FAIRLY LEVEL SURFACE FOR CANOEISTS SHOULD THEY STEP OFF THE RAMP AND ONTO THE RIPRAP.

LEGEND

EXISTING/PROPOSED

990 — 990 ELEVATION

FILTER SOCK

0 30
FEET

CONSULTANT:

IOWA DEPARTMENT OF NATURAL RESOURCES

ENGINEERING SERVICES - WALLACE BUILDING
502 E. 9TH ST. DES MOINES, IA 50319-0034

GRADING PLAN

CONSTRUCTION PROJECT FOR:

BOONE FORKS CANOE RAMP

WEBSTER COUNTY, IOWA

NO.	BY DATE	REVISION

DRAWN BY:
PROJECT NUMBER: 15-02-94-08
CHKD BY:
DATE: 06/27/2018
SHEET No: 7

CANOE RAMP CENTERLINE CONTROL

No.	Type	Length	Direction	Start Station	End Station	Start Point	End Point
1	Line	130.00'	S37° 59' 30"E	0+00.00'	1+30.00'	(4804099.3410',3577226.8170',923.10')	(4804179.3620',3577124.3639',910.40')

CANOE RAMP ACCESS PROFILE

No.	PVI Station	PVI Elevation	Grade In	Grade Out	A (Grade Change)
1	0+00.00'	923.10'		-6.00%	
2	0+20.00'	921.90'	-6.00%	-13.00%	7.00%
3	0+90.00'	912.80'	-13.00%	-6.00%	7.00%
4	1+30.00'	910.40'	-6.00%		

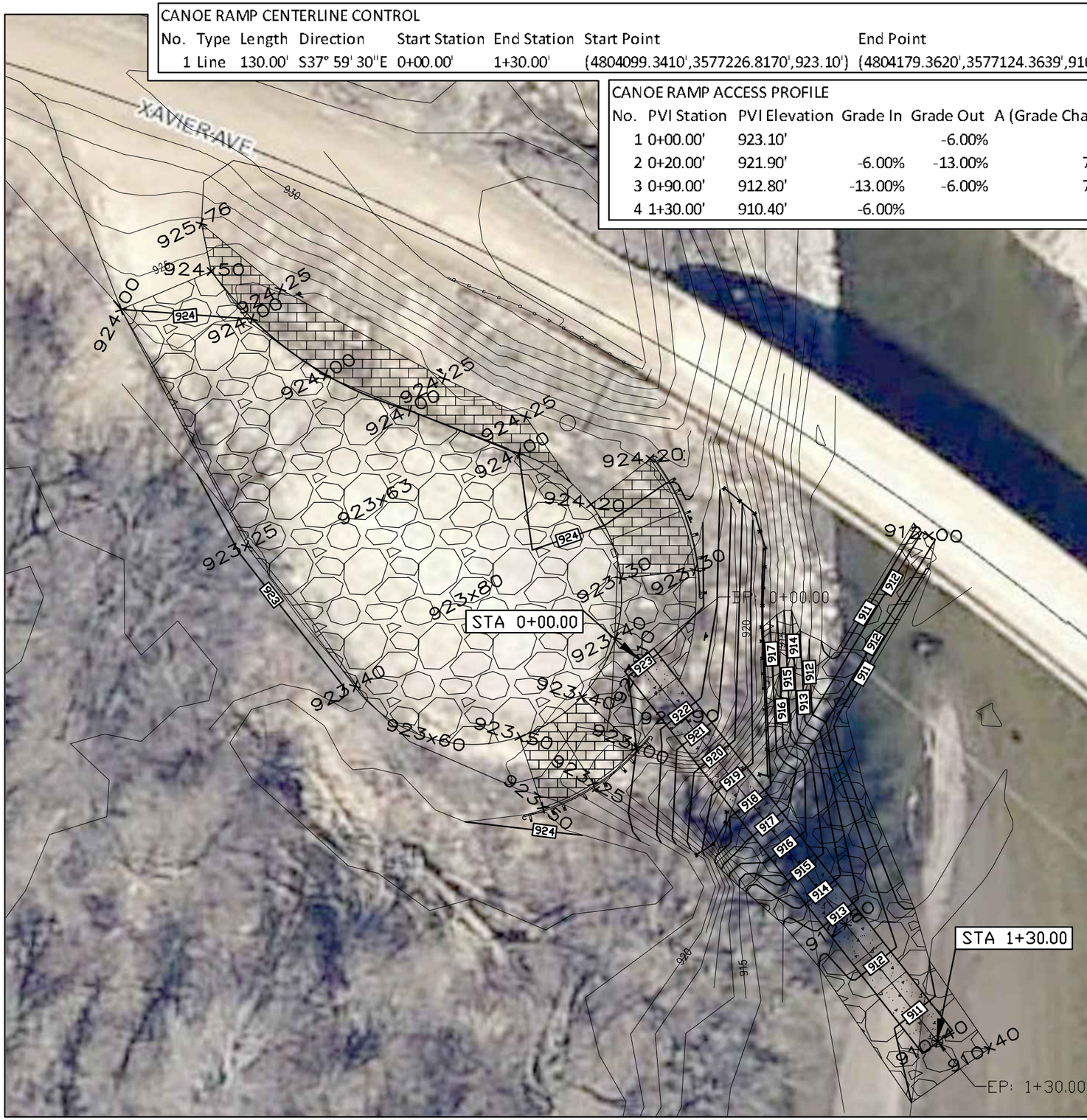

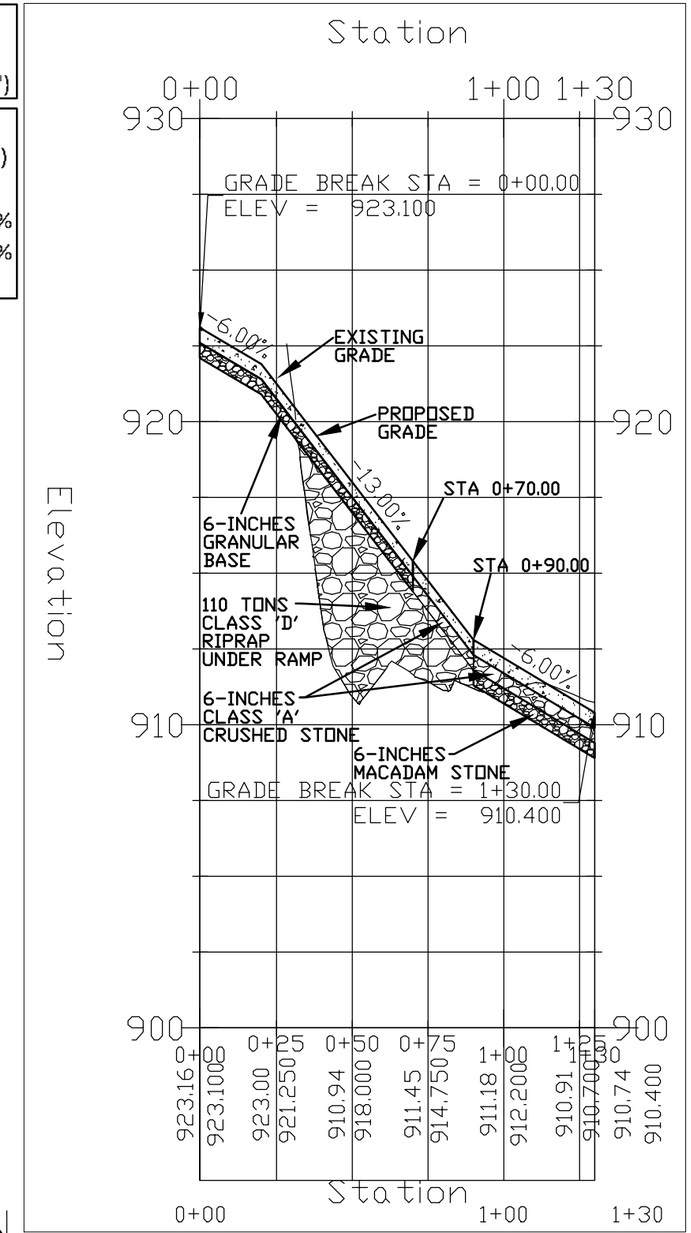

CANOE RAMP PROFILE

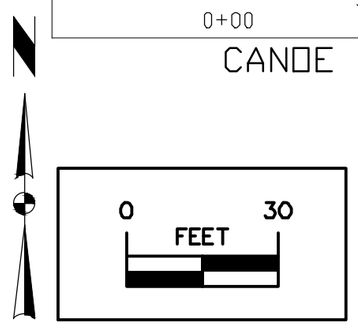

LEGEND

EXISTING/PROPOSED

990 — 990 ELEVATION

FILTER SOCK

CONSULTANT:

IOWA DEPARTMENT OF NATURAL RESOURCES

ENGINEERING SERVICES - WALLACE BUILDING
502 E. 9TH ST. DES MOINES, IA 50319-0034

RAMP PROFILE

CONSTRUCTION PROJECT FOR:

BOONE FORKS CANOE RAMP

WEBSTER COUNTY, IOWA

NO.	BY / DATE	REVISION

DRAWN BY:

PROJECT NUMBER: 15-02-94-08

CHK'D BY:

DATE: 06/27/2018

SHEET No: 8

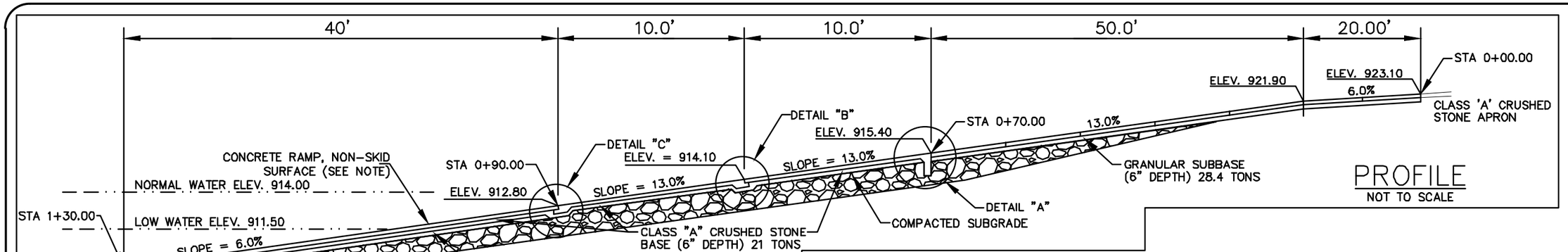

NOTE:
CONCRETE RAMP FINISH SHALL BE GROOVED DIAGONALLY TO FORM A NON-SKID SURFACE – MIN. 1" DEPTH, MAX. 2-1/2" BETWEEN GROOVES AND/OR AS DIRECTED BY THE INSPECTOR. ON RIVER RAMPS, GROOVES SHALL SLOPE TOWARDS DOWNSTREAM SIDE. SEE SHEET #10 FOR GROOVING DETAILS

PROFILE
NOT TO SCALE

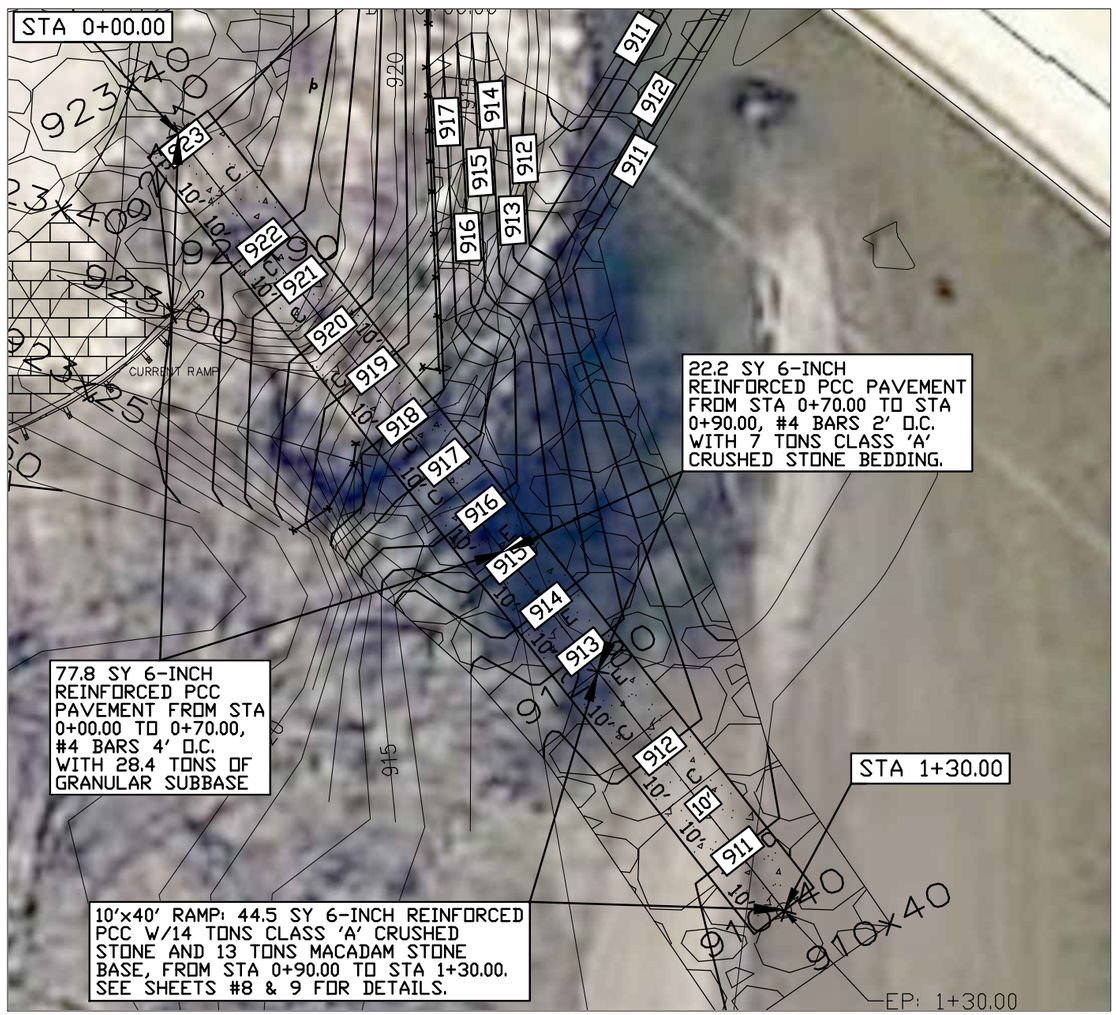

GENERAL NOTES

1. ALL CONCRETE SHALL CONFORM TO CLASS 'C' MIX IDOT SPECIFICATIONS SERIES 2012.
2. ALL EXPOSED EDGES OF CONCRETE TO BE BEVELED WITH 3/4" CHAMFER STRIPS OR 1/2" RADIUS TOOLED EDGE.
3. THE TOP 1" OF ALL EXPANSION JOINTS TO RECEIVE A SILICONE BASE POURING TYPE SEAL.
4. EXPANSION JOINTS - 3/4" PREFORMED RESILIENT FILLER MATERIAL.
5. REINFORCING STEEL - GRADE 40 - DEFORMED EPOXY COATED REBAR.
6. THAT PORTION OF THE RAMP TO BE PLACED BELOW THE WATERLINE MAY BE FORMED ABOVE THE WATERLINE AND CAREFULLY PUSHED INTO POSITION UNDERWATER TO THE LOCATION AND ELEVATION AS SHOWN ON THE PLAN AND AS APPROVED BY THE INSPECTOR. THE REMAINING SECTIONS OF THE RAMP SHALL BE FORMED AND POURED IN PLACE.

LEGEND
EXISTING/PROPOSED

990 — 990 ELEVATION

FILTER SOCK

N

0 20
FEET

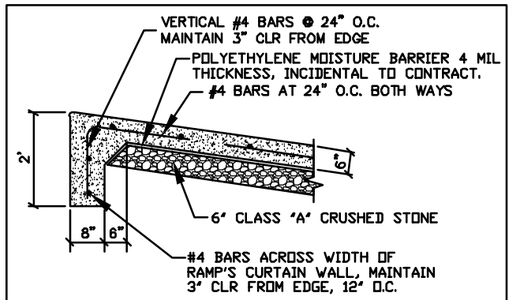

DETAIL "A"
NOT TO SCALE

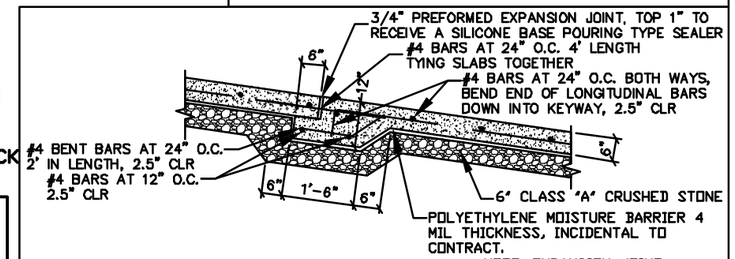

NOTE: EXPANSION JOINT MATERIAL, REINFORCING STEEL AND TIE BARS TO BE INCIDENTAL TO CONCRETE BID ITEM.

DETAIL "B"
NOT TO SCALE

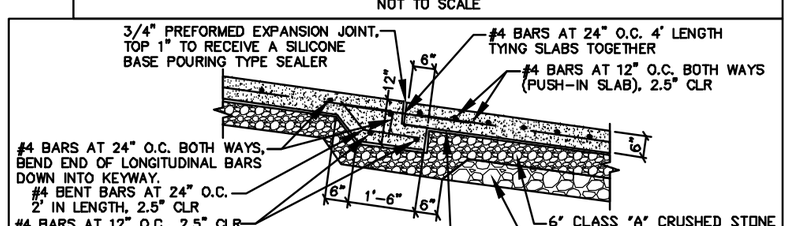

DETAIL "C"
NOT TO SCALE

CONSULTANT:

IOWA DEPARTMENT OF NATURAL RESOURCES

ENGINEERING SERVICES - WALLACE BUILDING
502 E. 9TH ST. DES MOINES, IA 50319-0034

RAMP DETAILS

CONSTRUCTION PROJECT FOR:
BOONE FORKS CANOE RAMP
WEBSTER COUNTY, IOWA

NO.	BY DATE	REVISION

DRAWN BY:
PROJECT NUMBER: 15-02-94-08
CHKD BY:
DATE: 06/27/2018
SHEET No: 9

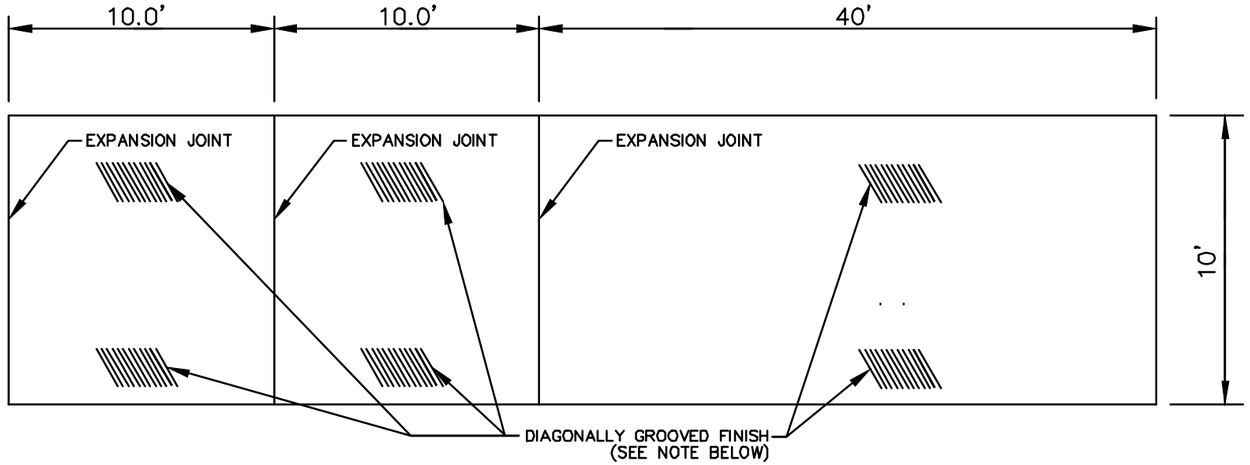

PLAN

NOT TO SCALE

NOTE:
CONCRETE RAMP FINISH SHALL BE GROOVED DIAGONALLY (60°) TO FORM A NON-SKID SURFACE – MIN. 1" DEPTH, MAX. 2-1/2" BETWEEN GROOVES AND/OR AS DIRECTED BY THE INSPECTOR.

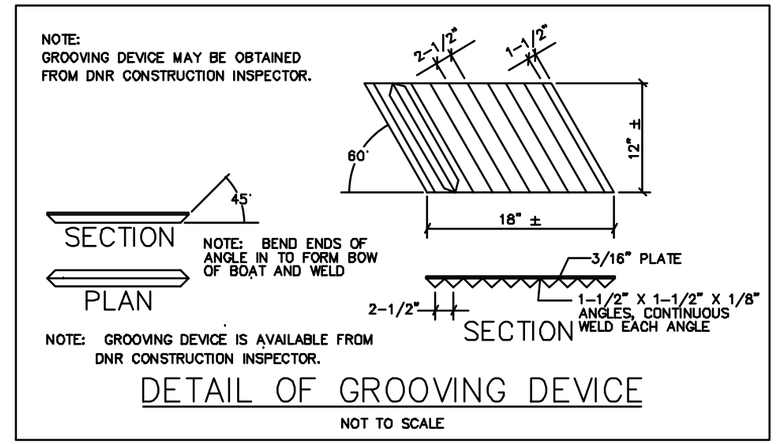

DETAIL OF GROOVING DEVICE

NOT TO SCALE

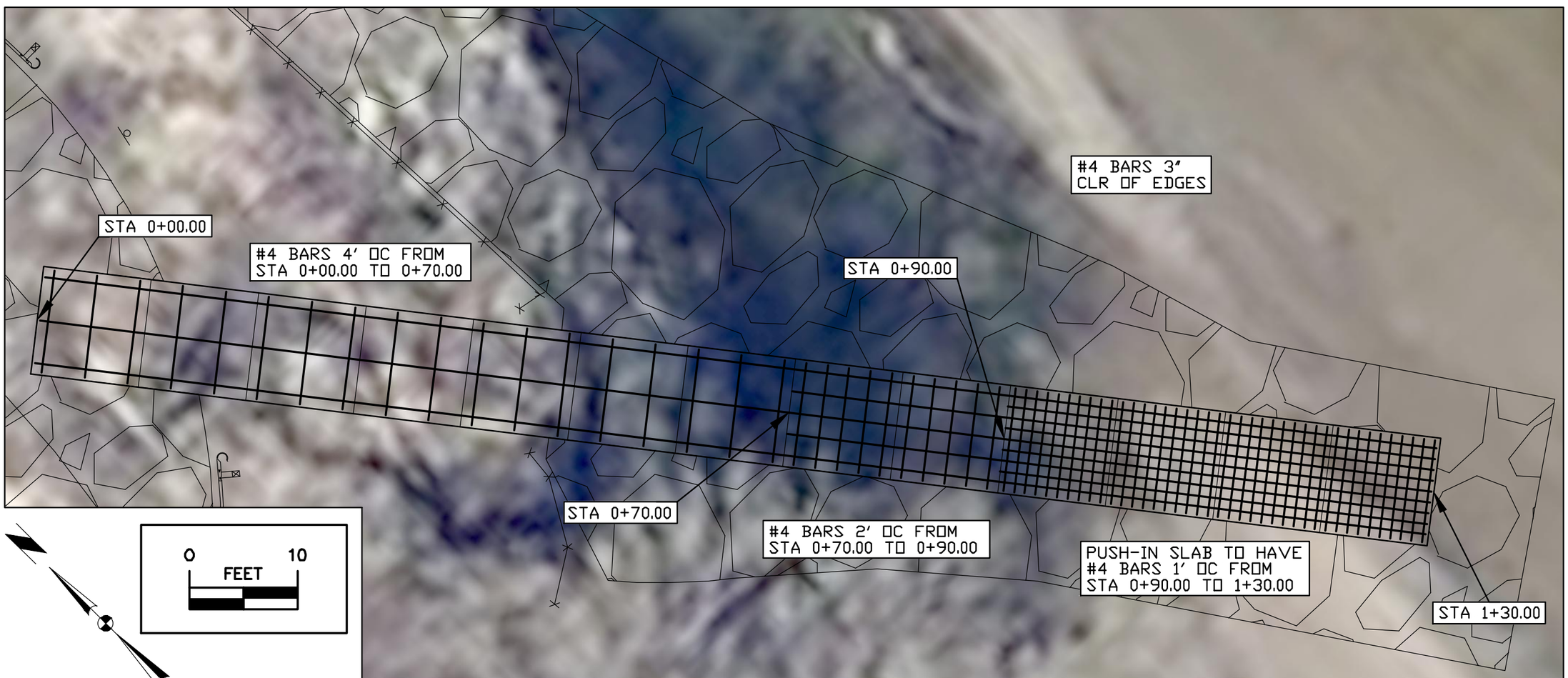

CONSULTANT:

IOWA DEPARTMENT OF NATURAL RESOURCES

ENGINEERING SERVICES - WALLACE BUILDING
502 E. 9TH ST., DES MOINES IA 50319-0034

RAMP REINFORCING DETAILS

CONSTRUCTION PROJECT FOR:
BOONE FORKS CANOE RAMP

WEBSTER COUNTY, IOWA

NO.	BY DATE	REVISION

DRAWN BY:
PROJECT NUMBER: 15-02-94-08
CHK'D BY:
DATE: 06/27/2018
SHEET No: 10

ROCK VANE CENTERLINE CONTROL

No.	Type	Length	Direction	Start Station	End Station	Start Point	End Point
1	Line	82.20'	N30° 56' 32"E	0+00.00'	0+82.20'	(4804134.7227',3577189.6397',917.63')	(4804176.9854',3577260.1377',912.00')

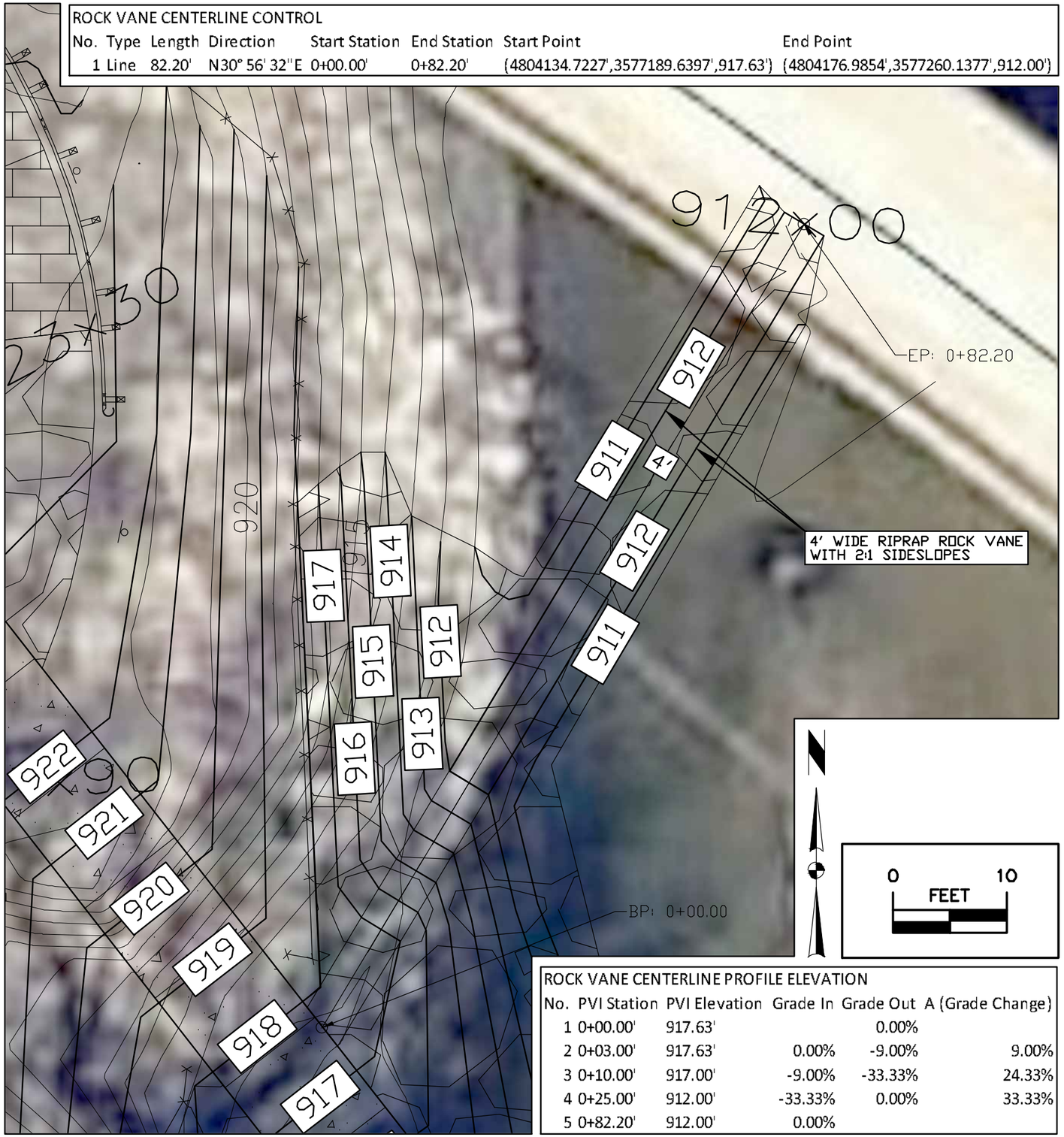

ROCK VANE CENTERLINE PROFILE ELEVATION

No.	PVI Station	PVI Elevation	Grade In	Grade Out	A (Grade Change)
1	0+00.00'	917.63'		0.00%	
2	0+03.00'	917.63'	0.00%	-9.00%	9.00%
3	0+10.00'	917.00'	-9.00%	-33.33%	24.33%
4	0+25.00'	912.00'	-33.33%	0.00%	33.33%
5	0+82.20'	912.00'	0.00%		

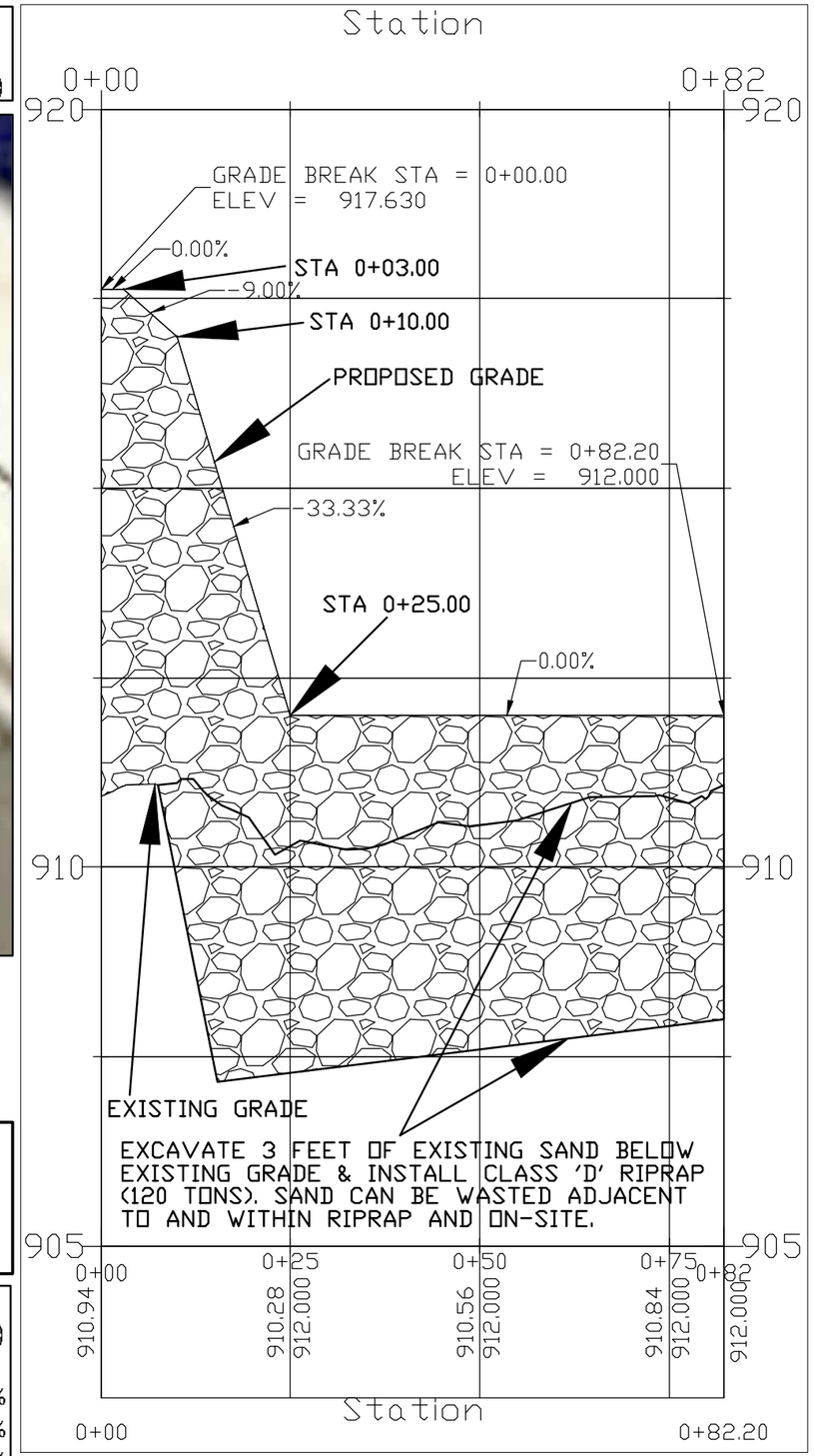

ROCK VANE PROFILE

CONSULTANT:

IOWA DEPARTMENT OF NATURAL RESOURCES

ENGINEERING SERVICES - WALLACE BUILDING
502 E. 9TH ST. DES MOINES, IA 50319-0034

ROCK VANE DETAILS

CONSTRUCTION PROJECT FOR:
BOONE FORKS CANOE RAMP
WEBSTER COUNTY, IOWA

NO.	BY DATE	REVISION

DRAWN BY:
PROJECT NUMBER: 15-02-94-08
CHK'D BY:
DATE: 06/27/2018
SHEET No: 11

GRAVEL CUL-DE-SAC EDGE CONTROL LINE

No.	Type	Length	Radius	Direction	Start Station	End Station	Delta angle	Chord length	Chord Direction	Start Point	End Point	Center Point
1	Line	26.23'		N66° 48' 21"E	0+00.00'	0+26.23'				(4803960.2820',3577320.7450',924.00')	(4803984.3950',3577331.0770',924.50')	
2	Curve	66.40'	100.00'		0+26.23'	0+92.64'	38.0455 (d)	65.19'	S54° 56' 50"E	(4803984.3950',3577331.0770',924.50')	(4804037.7600',3577293.6370',924.00')	(4804065.3742',3577389.7487')
3	Line	31.41'		S68° 35' 18"E	0+92.64'	1+24.05'				(4804037.7600',3577293.6370',924.00')	(4804067.0039',3577282.1696',924.00')	
4	Curve	149.71'	40.00'		1+24.05'	2+73.76'	214.4473 (d)	76.41'	S35° 07' 19"W	(4804067.0039',3577282.1696',924.00')	(4804023.0426',3577219.6695',923.40')	(4804054.7109',3577244.1054',923.80')
5	Line	47.62'		N37° 38' 29"W	2+73.76'	3+21.38'				(4804023.0426',3577219.6695',923.40')	(4803993.9620',3577257.3750',923.25')	
6	Line	71.76'		N27° 59' 23"W	3+21.38'	3+93.14'				(4803993.9620',3577257.3750',923.25')	(4803960.2820',3577320.7450',924.00')	

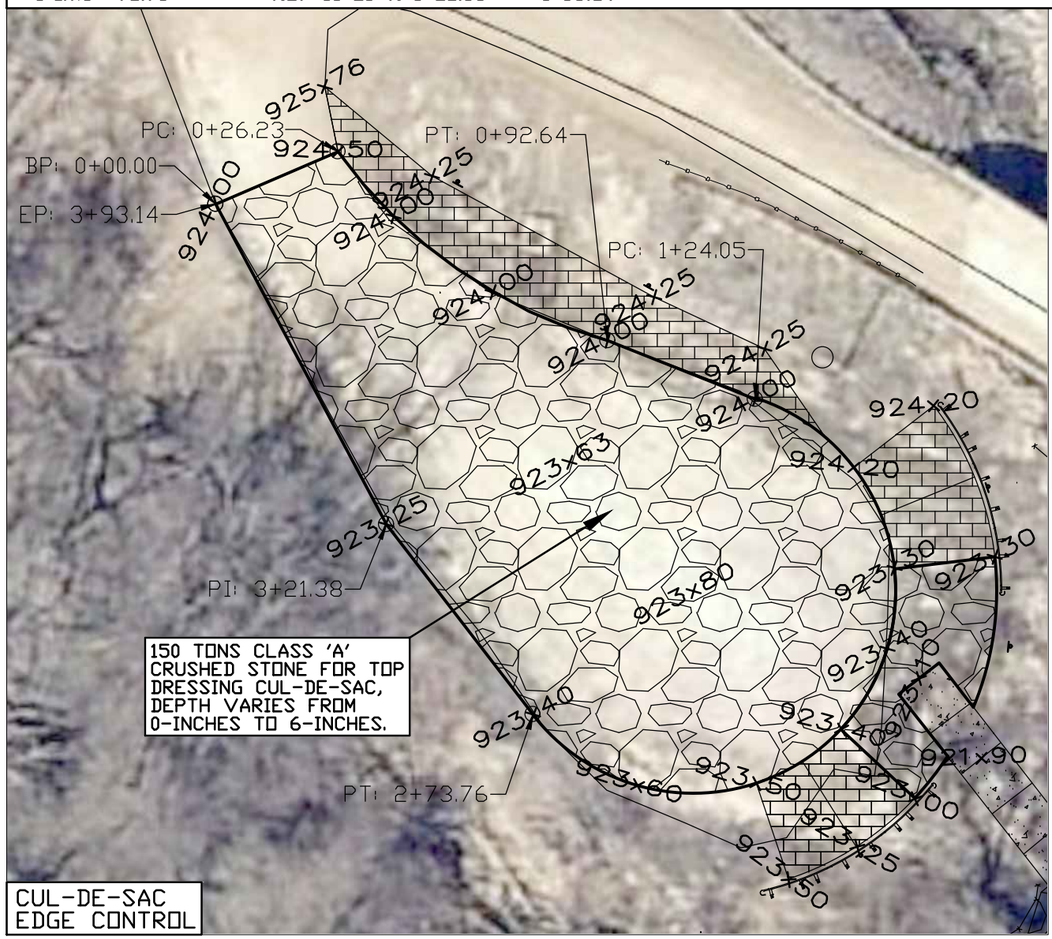

CUL-DE-SAC EDGE CONTROL

0 30
FEET

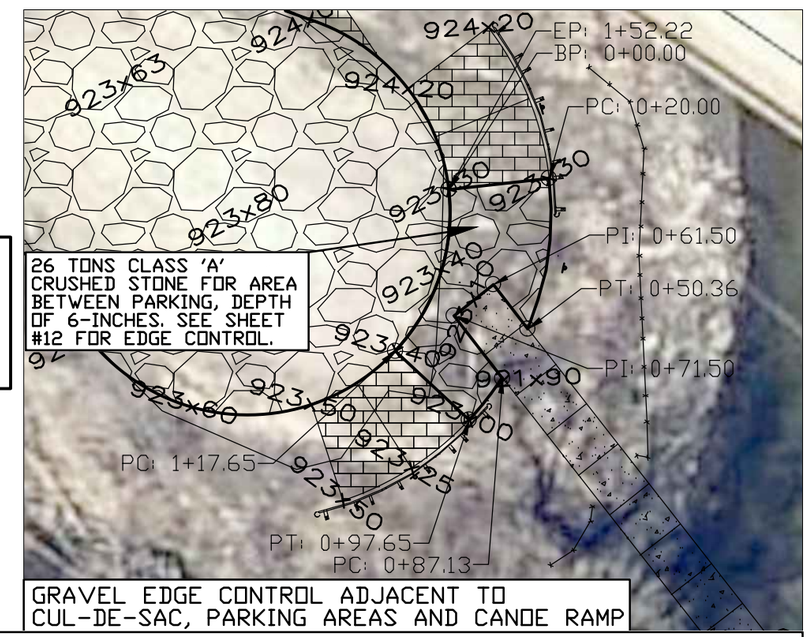

GRAVEL EDGE CONTROL ADJACENT TO CUL-DE-SAC, PARKING AREAS AND CANOE RAMP

GRAVEL EDGE CONTROL LINE ADJACENT TO CUL-DE-SAC, PARKING AREAS AND CANOE RAMP

1	Line	20.00'		N83° 31' 40"E	0+00.00'	0+20.00'				(4804094.4560',3577248.6144',923.30')	(4804114.3285',3577250.8688',923.30')	
2	Curve	30.36'	60.00'		0+20.00'	0+50.36'	28.9963 (d)	30.04'	S8° 01' 33"W	(4804114.3285',3577250.8688',923.30')	(4804110.1341',3577221.1213',922.43')	(4804054.7109',3577244.1054',923.80')
3	Line	11.13'		N37° 59' 30"W	0+50.36'	0+61.50'				(4804110.1341',3577221.1213',922.43')	(4804103.2815',3577229.8948',923.10')	
4	Line	10.00'		S52° 00' 30"W	0+61.50'	0+71.50'				(4804103.2815',3577229.8948',923.10')	(4804095.4005',3577223.7393',923.10')	
5	Line	15.64'		S37° 59' 30"E	0+71.50'	0+87.13'				(4804095.4005',3577223.7393',923.10')	(4804105.0247',3577211.4172',922.16')	
6	Curve	10.51'	60.00'		0+87.13'	0+97.65'	10.0406 (d)	10.50'	S38° 01' 54"W	(4804105.0247',3577211.4172',922.16')	(4804098.5551',3577203.1458',923.00')	(4804054.7109',3577244.1054',923.80')
7	Line	20.00'		N46° 56' 53"W	0+97.65'	1+17.65'				(4804098.5551',3577203.1458',923.00')	(4804083.9403',3577216.7990',923.40')	
8	Curve	34.57'	40.00'		1+17.65'	1+52.22'	49.5242 (d)	33.51'	N18° 17' 23"E	(4804083.9403',3577216.7990',923.40')	(4804094.4560',3577248.6144',923.30')	(4804054.7109',3577244.1054',923.80')

CONSULTANT:

IOWA DEPARTMENT OF NATURAL RESOURCES

ENGINEERING SERVICES - WALLACE BUILDING
502 E. 9TH ST. DES MOINES, IA 50319-0034

CUL-DE-SAC EDGE CONTROL

CONSTRUCTION PROJECT FOR:
BOONE FORKS CANOE RAMP

WEBSTER COUNTY, IOWA

NO.	BY DATE	REVISION

DRAWN BY:
PROJECT NUMBER: 15-02-94-08
CHKD BY:
DATE: 06/27/2018

SHEET No: 12

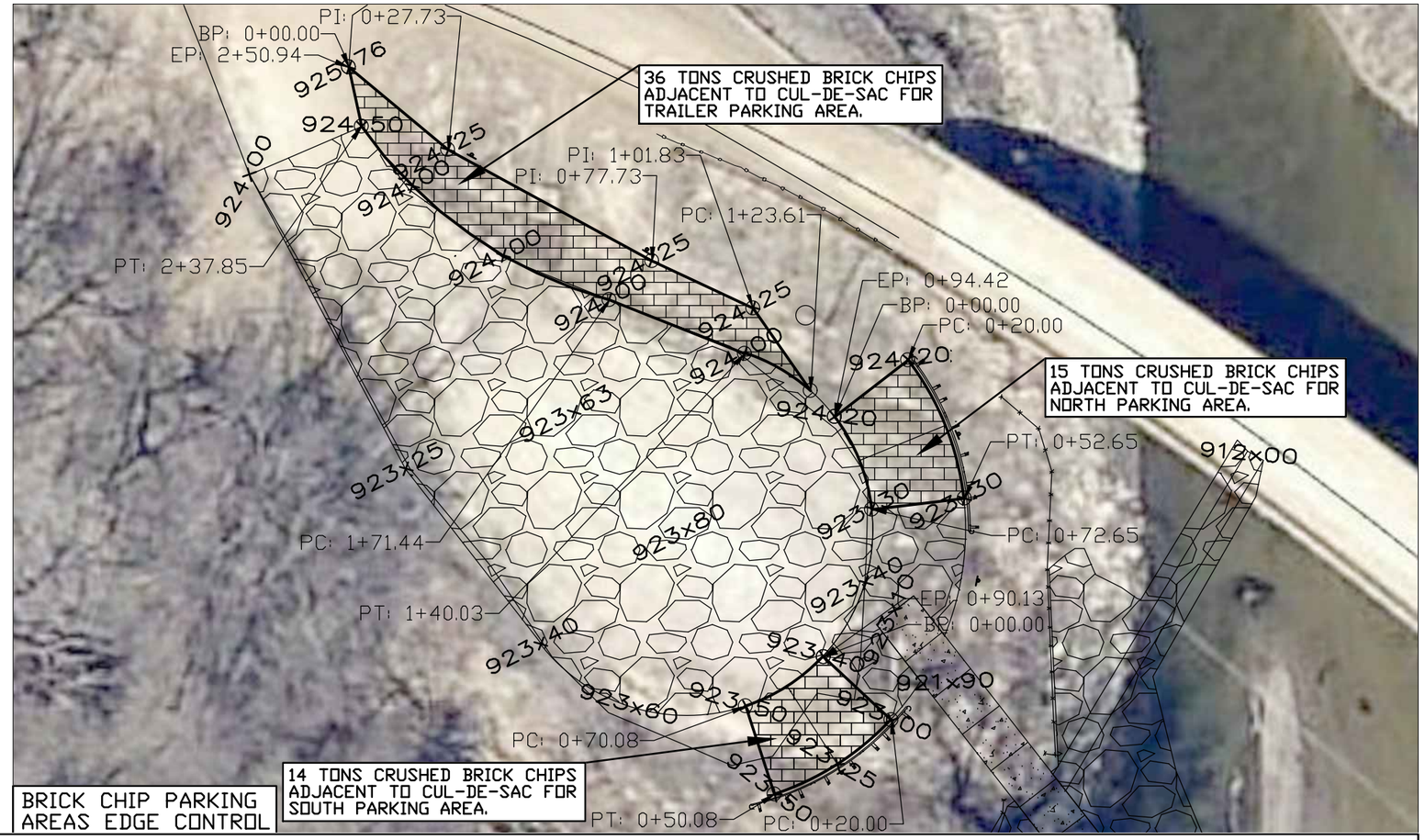

BRICK CHIP PARKING AREAS EDGE CONTROL

N

0 30
FEET

TRAILER PARKING EDGE CONTROL LINE (BRICK CHIPS)

No.	Type	Length	Radius	Direction	Start Station	End Station	Delta angle	Chord length	Chord Direction	Start Point	End Point	Center Point
1	Line	27.73'		S50° 13' 15"E	0+00.00'	0+27.73'				(4803981.7640',3577343.9050',925.76')	(4804003.0743',3577326.1630',924.25')	
2	Line	50.00'		S61° 20' 40"E	0+27.73'	0+77.73'				(4804003.0743',3577326.1630',924.25')	(4804046.9501',3577302.1858',924.25')	
3	Line	24.10'		S65° 02' 02"E	0+77.73'	1+01.83'				(4804046.9501',3577302.1858',924.25')	(4804068.8014',3577292.0122',924.25')	
4	Line	21.77'		S34° 38' 17"E	1+01.83'	1+23.61'				(4804068.8014',3577292.0122',924.25')	(4804081.1775',3577274.0974',924.15')	
5	Curve	16.43'	40.00'		1+23.61'	1+40.03'	23.5288 (d)	16.31'	N60° 20' 15"W	(4804081.1775',3577274.0974',924.15')	(4804067.0039',3577282.1696',924.00')	(4804054.7109',3577244.1054',923.80')
6	Line	31.41'		N68° 35' 18"W	1+40.03'	1+71.44'				(4804067.0039',3577282.1696',924.00')	(4804037.7600',3577293.6370',924.00')	
7	Curve	66.40'	100.00'		1+71.44'	2+37.85'	38.0455 (d)	65.19'	N54° 56' 50"W	(4804037.7600',3577293.6370',924.00')	(4803984.3950',3577331.0770',924.50')	(4804065.3742',3577389.7487')
8	Line	13.10'		N11° 35' 26"W	2+37.85'	2+50.94'				(4803984.3950',3577331.0770',924.50')	(4803981.7640',3577343.9050',925.76')	

NORTH PARKING EDGE CONTROL LINE (BRICK CHIPS)

No.	Type	Length	Radius	Direction	Start Station	End Station	Delta angle	Chord length	Chord Direction	Start Point	End Point	Center Point
1	Line	20.00'		N52° 20' 44"E	0+00.00'	0+20.00'				(4804086.3792',3577268.5414',923.20')	(4804102.2134',3577280.7594',923.20')	
2	Curve	32.65'	60.00'		0+20.00'	0+52.65'	31.1823 (d)	32.25'	S22° 03' 48"E	(4804102.2134',3577280.7594',923.20')	(4804114.3285',3577250.8688',923.30')	(4804054.7109',3577244.1054',923.80')
3	Line	20.00'		S83° 31' 40"W	0+52.65'	0+72.65'				(4804114.3285',3577250.8688',923.30')	(4804094.4560',3577248.6144',923.30')	
4	Curve	21.77'	40.00'		0+72.65'	0+94.42'	31.1823 (d)	21.50'	N22° 03' 48"W	(4804094.4560',3577248.6144',923.30')	(4804086.3792',3577268.5414',923.20')	(4804054.7109',3577244.1054',923.80')

SOUTH PARKING EDGE CONTROL LINE (BRICK CHIPS)

No.	Type	Length	Radius	Direction	Start Station	End Station	Delta angle	Chord length	Chord Direction	Start Point	End Point	Center Point
1	Line	20.00'		S46° 56' 53"E	0+00.00'	0+20.00'				(4804083.9403',3577216.7990',923.40')	(4804098.5551',3577203.1458',923.00')	
2	Curve	30.08'	60.00'		0+20.00'	0+50.08'	28.7230 (d)	29.76'	S57° 24' 48"W	(4804098.5551',3577203.1458',923.00')	(4804073.4760',3577187.1153',923.50')	(4804054.7109',3577244.1054',923.80')
3	Line	20.00'		N18° 13' 30"W	0+50.08'	0+70.08'				(4804073.4760',3577187.1153',923.50')	(4804067.2209',3577206.1120',923.50')	
4	Curve	20.05'	40.00'		0+70.08'	0+90.13'	28.7230 (d)	19.84'	N57° 24' 48"E	(4804067.2209',3577206.1120',923.50')	(4804083.9403',3577216.7990',923.40')	(4804054.7109',3577244.1054',923.80')

CONSULTANT:

IOWA DEPARTMENT OF NATURAL RESOURCES

ENGINEERING SERVICES - WALLACE BUILDING
502 E. 9TH ST. DES MOINES, IA 50319-0034

PARKING AREAS EDGE CONTROL

CONSTRUCTION PROJECT FOR:
BOONE FORKS CANOE RAMP
WEBSTER COUNTY, IOWA

NO.	BY DATE	REVISION

DRAWN BY:
PROJECT NUMBER: 15-02-94-08
CHK'D BY:
DATE: 06/27/2018
SHEET No: 13

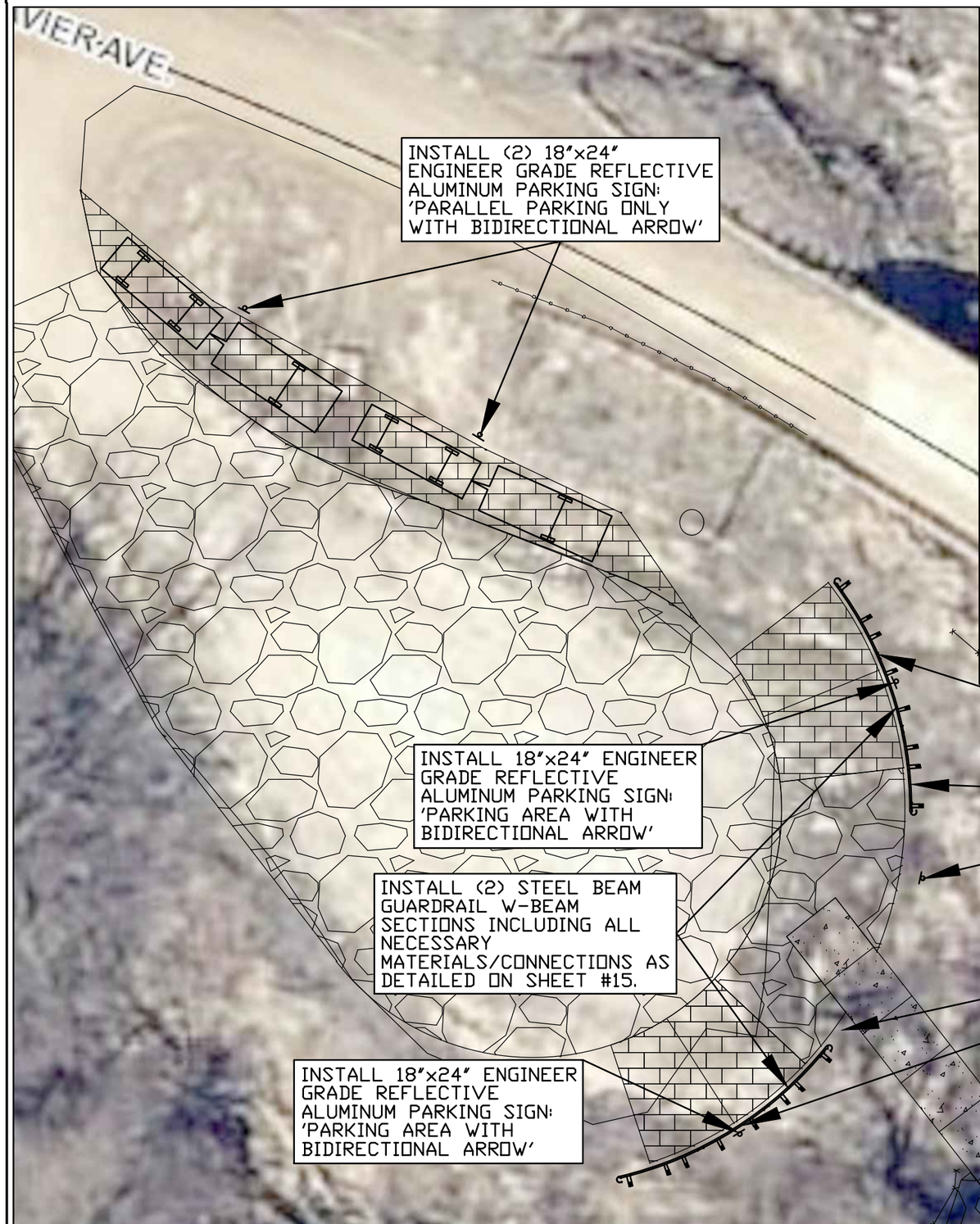

18"x24" ENGINEER GRADE REFLECTIVE ALUMINUM PARKING SIGN: 'PARALLEL PARKING ONLY WITH BIDIRECTIONAL ARROW'

18"x24" ENGINEER GRADE REFLECTIVE ALUMINUM PARKING SIGN: 'PARKING AREA WITH BIDIRECTIONAL ARROW'

NOTES

1. ROADWAY SIGNAGE TO BE ATTACHED TO 'U' CHANNEL POST (2 LBS/FT) WITH THE BOTTOM OF SIGN LOCATED 7 FEET ABOVE FINISHED GRADE. PARKING AREA W/BIDIRECTIONAL ARROW SIGN TO BE LOCATED 1-FOOT BEHIND GUARDRAIL. PARALLEL PARKING ONLY W/BIDIRECTIONAL ARROW SIGN TO BE LOCATED 2-FOOT OFF EDGE OF BRICK CHIPS.
2. SALVAGED CANOE RAMP SIGNAGE TO BE INSTALLED WITH NEW U-CHANNEL POST (2 LBS/FT).

CONSULTANT:

IOWA DEPARTMENT OF NATURAL RESOURCES

ENGINEERING SERVICES - WALLACE BUILING
502 E. 9TH ST. DES MOINES, IA 50319-0034

PARKING SIGNAGE & GUARDRAIL

CONSTRUCTION PROJECT FOR:
BOONE FORKS CANOE RAMP
WEBSTER COUNTY, IOWA

NO.	BY DATE	REVISION

DRAWN BY:
PROJECT NUMBER: 15-02-94-08
CHK'D BY:
DATE: 06/27/2018
SHEET No: 14

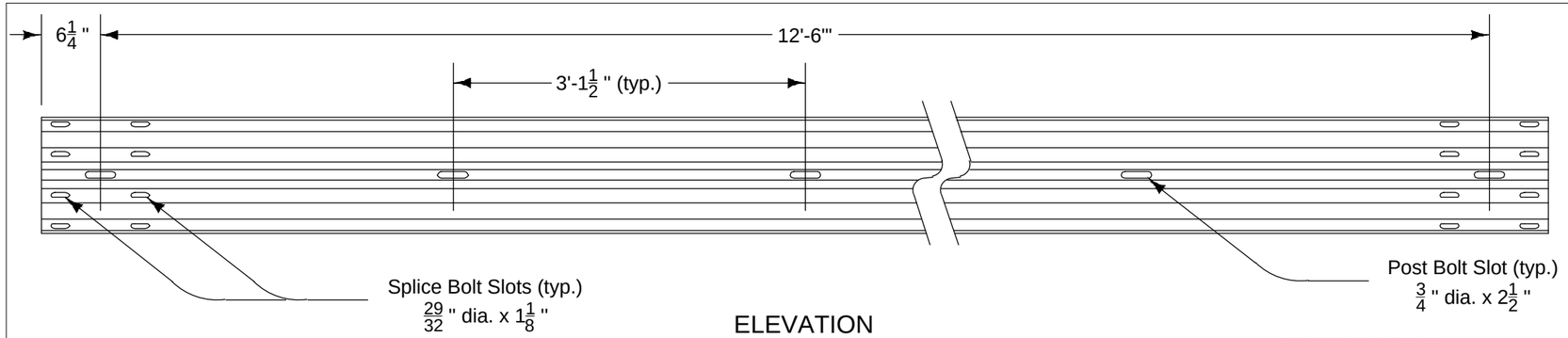

ELEVATION

W-BEAM RAIL

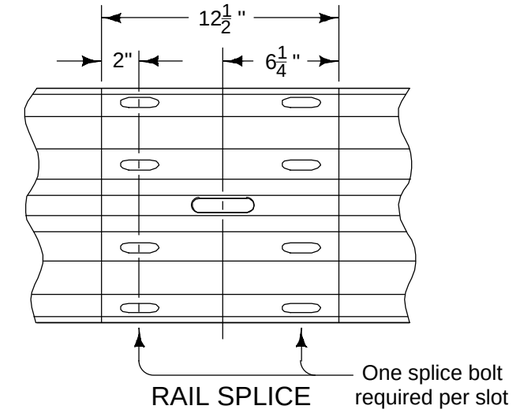

RAIL SPLICE

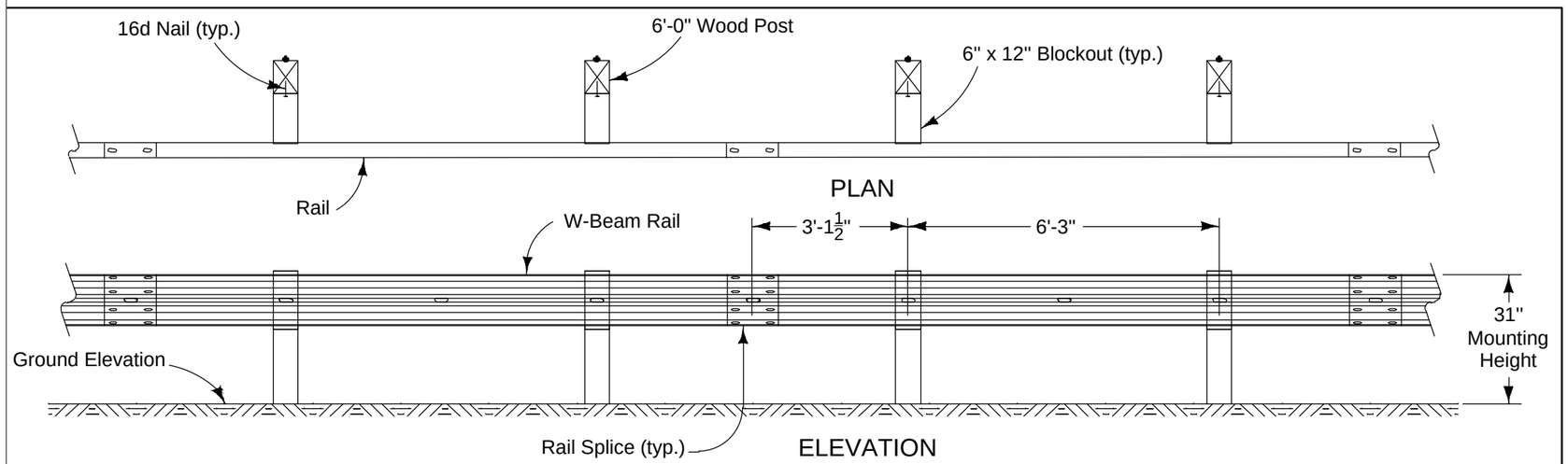

PLAN

ELEVATION

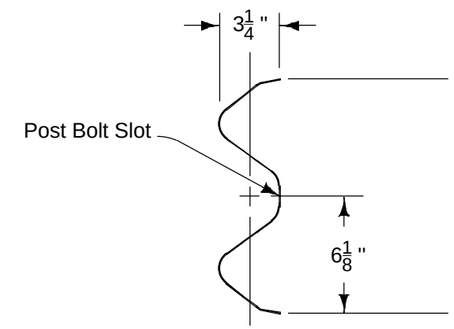

SECTION

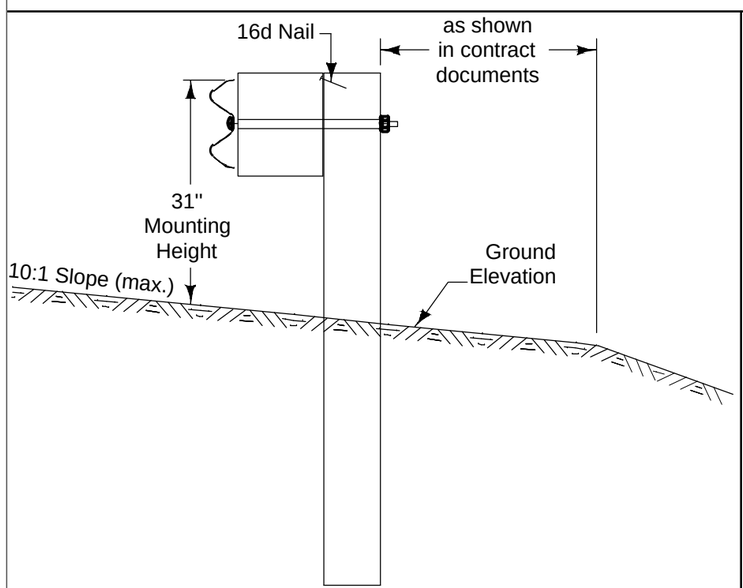

SECTION

W-BEAM INSTALLATION

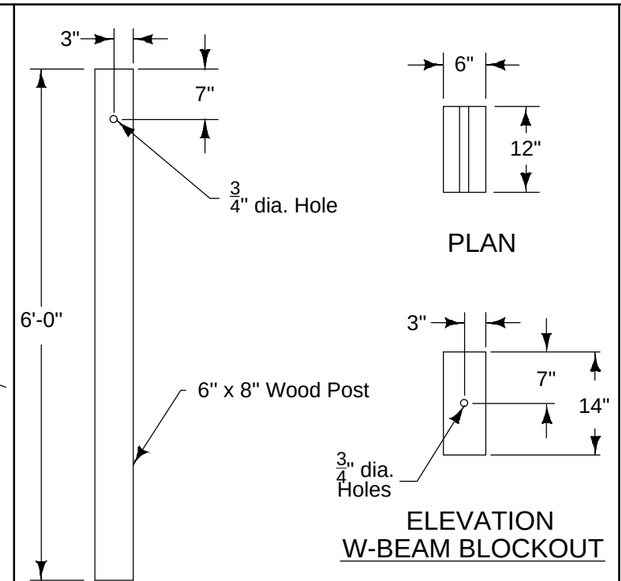

PLAN

ELEVATION

W-BEAM BLOCKOUT

WOOD POST & BLOCKOUT DETAILS

BOLT DETAILS

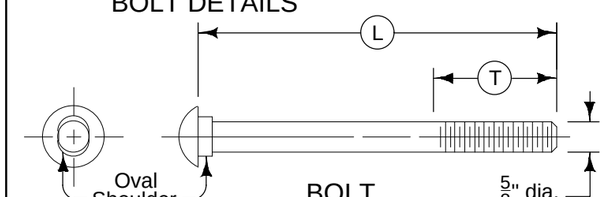

BOLT

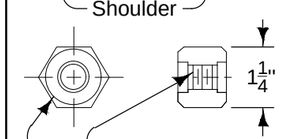

NUT

HARDWARE

APPLICATION	(T)	(L)
Splice Bolt	1 1/16"	1 1/4"
Bolt for Wood Post with 12" Blockout	2 1/2"	22"

(T) = Min. Thread Length (L) = Bolt Length

MODIFIED

STANDARD ROAD PLAN

STEEL BEAM GUARDRAIL COMPONENTS

REVISION	
4	10-18-16

BA-200

CONSULTANT:

IOWA DEPARTMENT OF NATURAL RESOURCES

ENGINEERING SERVICES - WALLACE BUILDING
502 E. 9TH ST. DES MOINES, IA 50319-0034

GUARDRAIL DETAILS

CONSTRUCTION PROJECT FOR:

BOONE FORKS CANOE RAMP

WEBSTER COUNTY, IOWA

NO.	BY DATE	REVISION

DRAWN BY:

PROJECT NUMBER: 15-02-94-08

CHK'D BY:

DATE: 06/27/2018

SHEET No: 15

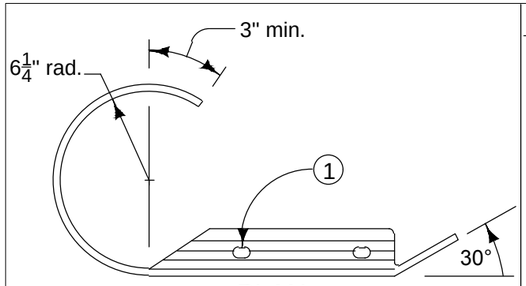

PLAN

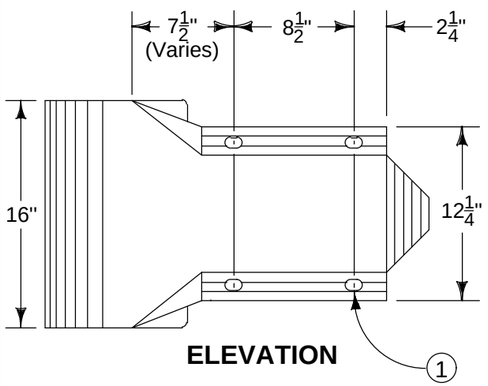

ELEVATION

ROUNDED W-BEAM END SECTION

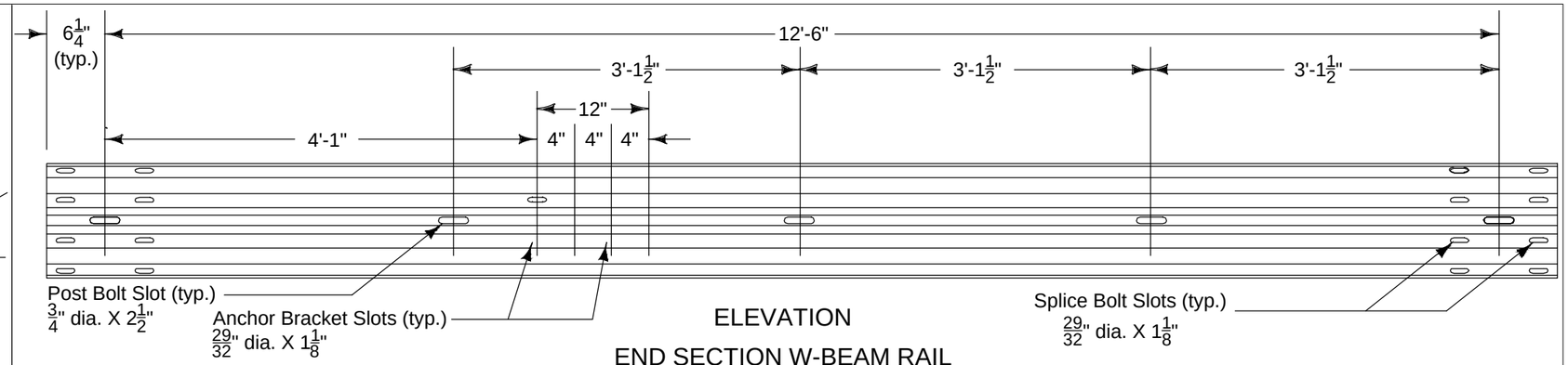

ELEVATION

END SECTION W-BEAM RAIL

1 $\frac{29}{32}$" x $1\frac{1}{8}$" slots ($\frac{29}{32}$" x 3" slots acceptable).

2 Refer to BA-200.

Contract Item:
Steel Beam Guardrail End Anchor, W-Beam

Materials included in the Contract Item:
- (1) 12'-6" End Section W-Beam Rail
- (2) Foundation Tube Assemblies
- (2) BCT Wood Posts
- (1) Rounded W-Beam End Section
- (1) Cable Anchor Bracket
- (1) BCT Cable Anchor Assembly
- (1) Ground Strut Assembly
- (1) Pipe Sleeve
- (1) Bearing Plate
- (1) W-Beam Post (wood or steel - match remainder of installation)
- (1) W-Beam Blockout

Approved bolts, nuts, and washers

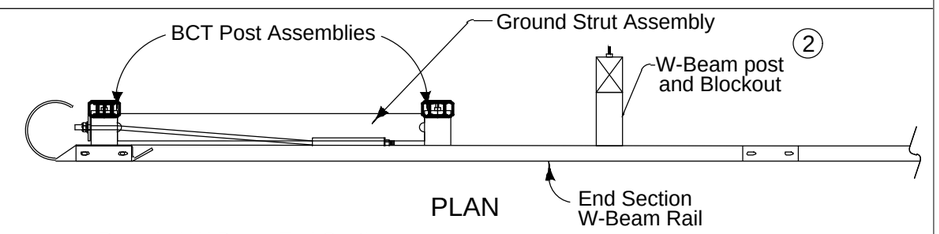

PLAN

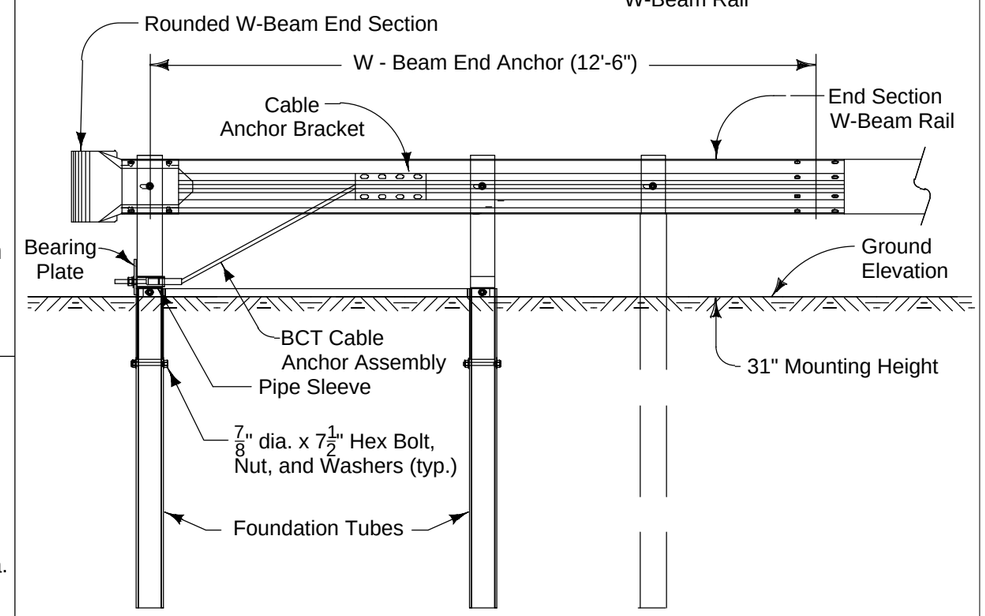

ELEVATION

INSTALLATION

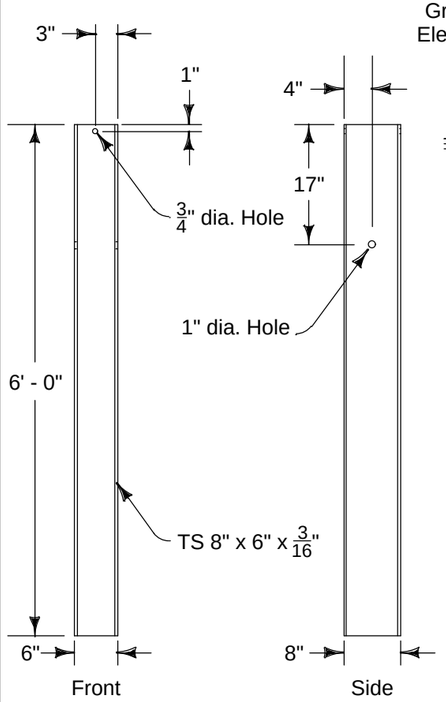

FOUNDATION TUBE

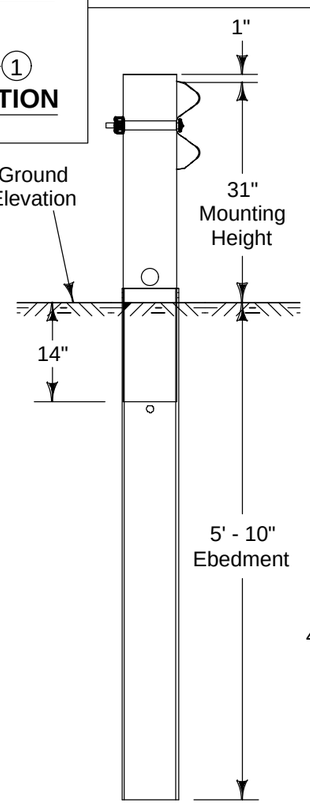

Typical Section

INSTALLATION

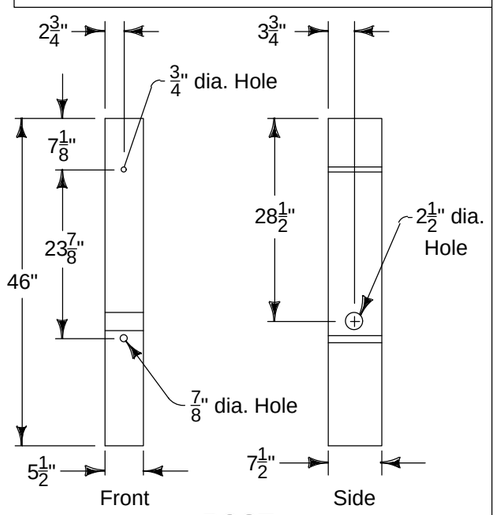

POST

BCT POST ASSEMBLY

MODIFIED

STANDARD ROAD PLAN

REVISION	
4	10-18-16

BA-203

STEEL BEAM GUARDRAIL
W-BEAM END ANCHOR

CONSULTANT:

IOWA DEPARTMENT OF NATURAL RESOURCES

ENGINEERING SERVICES - WALLACE BUILDING
502 E. 9TH ST. DES MOINES, IA 50319-0034

GUARDRAIL DETAILS

CONSTRUCTION PROJECT FOR:
BOONE FORKS CANOE RAMP
WEBSTER COUNTY, IOWA

NO.	BY DATE	REVISION

DRAWN BY: PROJECT NUMBER: 15-02-94-08
CHK'D BY: DATE: 06/27/2018
SHEET No: 16