IOWA DEPARTMENT OF NATURAL RESOURCES

CONSTRUCTION DOCUMENTS FOR STATE FOREST NURSERY RESTROOM RENOVATION STORY COUNTY, IOWA

IOWA ONE CALL
1-800-292-8989
www.iowaonecall.com
811

PROJECT #19-02-85-01

PLANS PREPARED BY

LAND AND WATERS BUREAU

CONSERVATION AND RECREATION DIVISION

LICENSED PROFESSIONAL ARCHITECT
RYAN ELLIOTT RICHEY
06461
IOWA

I hereby certify that this architectural document was prepared by me or under my direct personal supervision and that I am a duly Registered Professional Architect under the laws of the State of Iowa.

RYAN E. RICHEY DATE

My license renewal date is June 30, 2019.

Pages or sheets covered by this seal:

A-001 – A-600

SHEET INDEX

SHEET. NO.	SHEET TITLE
	ARCHITECTURAL
A-001	COVER SHEET
A-002	WALL TYPES, NOTES AND SYMBOLS
A-003	PROJECT LOCATION
A-010	OVERALL EXISTING PLAN
A-050	DEMOLITION PLAN
A-100	REFERENCE FLOOR PLAN
A-101	ENLARGED PLANS & ELEVATIONS
A-110	REFLECTED CEILING AND POWER PLAN
A-600	FINISH AND DOOR SCHEDULES

DIRECTORY

OWNER		DISTRICT INSPECTOR	
COMPANY	IOWA DEPARTMENT OF NATURAL RESOURCES	COMPANY	IOWA DEPARTMENT OF NATURAL RESOURCES
ADDRESS	502 E. 9TH. ST.	ADDRESS	
CITY,STATE,ZIP	DES MOINES, IA 50319	CITY,STATE,ZIP	JEFFERSON, IA
CONTACT	N/A	CONTACT	DON LABATE
TELEPHONE	515.725.8200	TELEPHONE	515-250-3714
FAX	515.725.8202	FAX	–
EMAIL	N/A	EMAIL	DON.LABATE@DNR.IOWA.GOV
ARCHITECT			
COMPANY	IOWA DEPARTMENT OF NATURAL RESOURCES		–
ADDRESS	502 E. 9TH. ST.		–
CITY,STATE,ZIP	DES MOINES, IA 50319		–
CONTACT	RYAN RICHEY		–
TELEPHONE	515.979.0107		–
FAX	–		–
EMAIL	RYAN.RICHEY@DNR.IOWA.GOV		–
	–		–
	–		–
	–		–
	–		–
	–		–
	–		–
	–		–
	–		–
	–		–
	–		–
	–		–
	–		–
	–		–

BUILDING CODES

BUILDING CODE – 2015 INTERNATIONAL BUILDING CODE

STRUCTURAL CODE – 2015 INTERNATIONAL BUILDING CODE

PLUMBING CODE – 2012 UNIFORM PLUMBING CODE & IOWA ADMINISTRATIVE CODE 641-25

MECHANICAL CODE – 2012 INTERNATIONAL MECHANICAL CODE

ELECTRICAL CODE – 2014 NATIONAL ELECTRIC CODE

ENERGY CODE – 2012 INTERNATIONAL ENERGY CONSERVATION CODE

ACCESSIBILITY CODE – 2010 ADA STANDARDS – US DEPARTMENT OF JUSTICE

PROJECT DESCRIPTION

THE STATE FORESTRY NURSERY BUILDING RESTROOM WILL HAVE THE RESTROOM AREA RENOVATED. PART OF THE BREAK ROOM 105 WILL BE USED AS AN EXPANSION OF THE RESTROOM AREA AND INSTALLATION OF A NEW KITCHENETTE AREA. THERE WILL BE FOUR ALTERNATES: #1 WILL CONSIST OF A NEW TOILET IN RESTROOM 120, #2 WILL CONSIST OF WASHER AND DRYER ELECTRIC AND PLUMBING IN MECHANICAL 126, #3 WILL CONSIST OF REROOFING THE ENTRY VESTIBULE 100, AND #4 WILL CONSIST OF REPLACING ALL CEILING TILES AND LIGHTING IN THE PUBLIC AREAS. THIS RENOVATION WILL UPDATE THE CURRENTLY AGED INTERIOR OF THE STATE NURSERY OFFICE.

AUTHORIZATION TO BID

ENGINEERING BUREAU CHIEF DATE

AUTHORIZED - PARKS | WILDLIFE | FISHERIES | LAW ENFORCEMENT DATE

BID ITEMS

ITEM NUMBER	ITEM DESCRIPTION	ESTIMATED QUANTITY
1	DEMOLITION	LUMP SUM
2	STOOP FOOTING	LUMP SUM
3	RESTROOM REMODEL	LUMP SUM
4	KITCHENETTE REMODEL	LUMP SUM
5	RESTORATION	LUMP SUM
6	MOBILIZATION	LUMP SUM
	ALTERNATE #1	
7	RESTROOM 120 REMODEL	LUMP SUM
	ALTERNATE #2	
8	MECHANICAL 126 REMODEL	LUMP SUM
	ALTERNATE #3	
9	ENTRY VESTIBULE 100 REROOF	LUMP SUM
	ALTERNATE #4	
10	PUBLIC AREA CEILING AND CARPET TILES, AND LIGHTING	LUMP SUM

CONSULTANT:

IOWA DEPARTMENT OF NATURAL RESOURCES
ENGINEERING SERVICES - WALLACE BUILING
502 E. 9TH ST., DES MOINES, IA 50319-0034
P: 515.725.8200
F: 515.725.8202

COVER SHEET

RESTROOM RENOVATION FOR:
STATE FOREST NURSERY

24040 SOUTH DUFF AVENUE
AMES, IA 50010

NO.	BY DATE	REVISION

DRAWN BY: PROJECT NUMBER: 19-02-85-01

CHK'D BY: DATE: 05.30.2018

SHEET No: A-001

DIMENSION NOTES

1. IN INTERIOR SPACES THE ACTUAL DIMENSIONS MAY BE LESS IMPORTANT THAN IF AT TWO ELEMENTS IN THE BUILDING WERE TO BE EQUAL. IN THESE CASES, THE WORD "EQUAL OR EQ" IS USED IN LIEU OF THE ACTUAL DIMENSIONS.
2. WHEN A ROOM CENTERLINE IS INDICATED ONLY ONE SIDE OF THE ROOMS ELEMENTS MAY BE DIMENSIONED.
3. COLUMN IDENTIFICATION: DETAILS WILL GOVERN ALL DIMENSIONS AND NO DIMENSIONS WILL BE SHOWN ON SMALL SCALE PLANS.
4. PARTITION CENTERED ON COLUMN OR GRID LINES WILL NOT BE DIMENSIONED ON SMALL SCALE PLANS.
5. PARTITION WITH A FINISHED FACE FLUSH WITH FINISH FACE OF COLUMN WILL NOT be DIMENSIONED ON SMALL SCALE PLANS.
6. PARTITION FINISH FACE ON COLUMN OR GRID LINE WILL NOT BE DIMENSIONED ON SMALL SCALE PLANS .
7. WHEN ONE JAMB OCCURS AT A COLUMN OR GRID LINE NO DIMENSIONS WILL BE SHOWN ON THE SMALL SCALE PLANS. THE OPENING WIDTH WILL BE GOVERNED BY CRITERIA OR SCHEDULES.
8. WHEN NEITHER JAMB OCCURS AT A COLUMN OR GRID LINE ONE JAMB WILL BE DIMENSIONED.
9. DOOR LOCATIONS ARE TO BE LOCATED BY ONE OF FOLLOWING:
   a. ONE JAMB FACE LOCATED BY A PARTITION AT RIGHT ANGLE. 4"TYPICAL UNLESS INDICATED ON PLAN.
   b. OR AS DIMENSIONED ON PLAN.
10. PARTITIONS ARE DIMENSIONED TO FACE OF CMU OR FACE OF STUD UNLESS OTHERWISE NOTED.
11. DIMENSIONS ARE INDICATED IN THE DOCUMENTS. THE DRAWINGS SHALL NOT BE SCALED FOR DIMENSIONS.

MATERIAL LEGEND

EARTH
COMPACTED EARTH
GRASS
GRAVEL
clay
fence
turf block
pavers
CONCRETE MASONRY UNIT
metal stud
PARTICLE BOARD
PLYWOOD
BATT INSULATION
ACOUSTICAL CEILING TILE
plastic
carpet
GYPSUM / STUCCO
grout
sand
foam INSULATION
RIGID INSULATION
ALUMINUM
STEEL
FINISHED WOOD
brick
CONCRETE
ASPHALT
cast stone
stone
glass
WOOD BLOCKING
CONTINUOUS WOOd

SYMBOL LEGEND

NORTH AAROW
00 TITLE SCALE: 0 = 0'-0" — DRAWING / DETAIL IDENTIFICATION
00 A-000 — SECTION REFERENCE
00 A-000 — DETAIL REFERENCE
00 A-000 — EXTERIOR ELEVATION
00/A-100 — INTERIOR ELEVATION
ELEVATION : 0'-0" DESCRIPTION1 — ELEVATION TARGET
1 A — COLUMN GRID
00 A-000 / 00 A-000 — MATCH LINES
ROOM 000 — ROOM/SPACE IDENTIFICATION
100 — DOOR TAG
00 — WINDOW TAG
00 — WALL TYPE REFERENCE
KEYNOTE NUMBER -NEW C.S.I. DIVISION/KEY
00 — KEYNOTE - DEMOLITION
00 — KEYNOTE - NEW/RENOVATION
00 — KEYNOTE - FINISH/ACCESSORY
℄ — PROPERTY LINE REFERENCE
℄ — CENTER LINE REFERENCE
0" — LEVEL CHANGE REFERENCE
DETAIL CUT LINE
1 — REVISION NUMBER AND CLOUD

GENERAL NOTES

THE FOLLOWING GENERAL NOTES SHALL PERTAIN TO THE ENTIRE SET OF CONTRACT DOCUMENTS

1. A GENERAL CONTRACTOR SHALL NOTE THAT THE ARCHITECTURAL DRAWINGS ARE ESTABLISHING A MINIMUM MATERIAL OR CONSTRUCTION METHOD STANDARD. THE GENERAL CONTRACTOR SHALL PROVIDE A BID PRICE BASED ON THE SPECIFIC MATERIALS NOTED.
2. DO NOT SCALE DRAWINGS. IF DIMENSIONS ARE IN QUESTION, THE CONTRACTOR SHALL BE RESPONSIBLE FOR OBTAINING CLARIFICATION FROM THE ARCHITECT BEFORE CONTINUING WITH CONSTRUCTION.
3. GENERAL CONTRACTOR AND SUBCONTRACTORS SHALL PERFORM THEIR WORK IN ACCORDANCE WITH ALL APPLICABLE CODES GOVERNING EACH TRADE.
4. THE CONTRACTOR SHALL MAINTAIN A CLEAN AND ORGANIZED JOB SITE, ACCEPTABLE TO THE OWNER.
5. THE CONTRACTOR SHALL COORDINATE THE SEQUENCE OF WORK WITH THE OWNER REPRESENTATIVE..
6. THERE SHALL BE NO DEVIATION BY THE GENERAL CONTRACTOR FROM THE CONSTRUCTION DOCUMENTS UNLESS APPROVED IN WRITING BY THE ARCHITECT.
7. EACH CONTRACTOR SHALL VERIFY EXISTING CONDITIONS IN THE FIELD PRIOR TO THE INITIATION OF WORK AND SHALL NOTIFY THE ARCHITECT OF ANY DISCREPANCIES OR CONDITIONS INTERFERING WITH THE ABILITY OF THE CONTRACTOR TO COMPLETE WORK AS OUTLINED ON THE CONSTRUCTION DRAWINGS.
8. ALL CONTRACTORS ARE REQUIRED TO COORDINATE THEIR WORK WITH OTHER TRADES. LACK OF THIS COORDINATION RESULTING IN ADDED COST TO THE CONTRACT WILL BE BORNE BY THE CONTRACTOR.
9. GENERAL CONTRACTOR SHALL BE RESPONSIBLE FOR KEEPING THE EXISTING BUILDING WATER TIGHT DURING CONSTRUCTION.
10. THE CONTRACTOR WILL VERIFY THAT EXIT EGRESS IS MAINTAINED FOR ALL OCCUPIED AREAS OF THE BUILDING THROUGHOUT ALL PHASES OF CONSTRUCTION.
11. PLAN DIMENSIONS ARE GIVEN TO FACE OF STUD OR BLOCK WALL. "CLEAR" DIMENSIONS ARE GIVEN TO THE FACE
12. THE OWNER WILL ASSUME ALL LIABILITY AND SHALL TAKE PERSONAL RESPONSIBILITY FOR ANY DECISIONS THAT THEY MAKE TO CHANGE OR ALTER THE CONSTRUCTION DOCUMENTS WITHOUT THE ARCHITECT'S WRITTEN APPROVAL.
13. PROTECT ALL EXISTING FINISHES AND MATERIALS TO REMAIN, IN ACCORDANCE WITH ACCEPTABLE TRADE PRACTICES, MANUFACTURER, RECOMMENDATIONS, OR AS DIRECTED BY THE ARCHITECT.
14. CUTTING OF EXISTING CONSTRUCTION FOR THE INSTALLATION OF ALL NEW WORK BY ALL TRADES, AND THE SUBSEQUENT PATCHING THEREOF, SHALL BE THE RESPONSIBILITY OF THE GENERAL CONTRACTOR, WHETHER THE WORK IS DONE BY HIS OWN FORCES OR NOT. GRINDING OF MATERIALS FOR REMOVAL SHALL NOT BE PERMITTED. CUTTING SHALL BE TO STRAIGHT LINE. UNWORKMAN-LIKE CUTTING, DAMAGE RESULTING THEREFROM AND UNACCEPTABLE PATCHING SHALL BE REPAIRED AND/OR REPLACED TO AN ACCEPTABLE CONDITION APPROVED BY THE ARCHITECT. A OWNER PROJECT REPRESENTATIVE SHALL BE NOTIFIED PRIOR TO CUTTING OF ANY STRUCTURAL ITEM (I.E. CONCRETE FLOOR, MASONRY, WALL, ETC.) WITHIN THE EXISTING BUILDING. METHOD OF CUTTING SHALL BE APPROVED BY THE OWNER PROJECT REPRESENTATIVE.
15. PATCHING MATERIAL SHALL MATCH EXISTING ADJACENT MATERIALS AS CLOSELY AS POSSIBLE IN COLOR, PATTERNS, AND/OR TEXTURES.
16. ALL SALVAGE MATERIALS REMOVED SHALL REMAIN THE PROPERTY OF THE OWNER. ALL NON-SALVAGE CONSTRUCTION MATERIALS AND DEBRIS FROM DEMOLITION WORK SHALL BE REMOVED FROM THE SITE AS WORK PROGRESSES, UNLESS OTHERWISE NOTED.
17. ISOLATE ALL DISSIMILAR METALS. G SHALL REQUEST APPROVAL BY THE ARCHITECT FOR MATERIALS USED FOR THIS PURPOSE, PRIOR TO INSTALLATION.
18. SEALANTS SHALL BE COMPATIBLE WITH ADJACENT SURFACE(S) THAT ARE IN CONTACT. REFER TO SPECIFICATIONS FOR APPROVED MANUFACTURERS AND PROCEDURES.
19. CAULK JOINTS OF DISSIMILAR EXPOSED TO VIEW MATERIALS AS REQUIRED BY THE ARCHITECT.
20. ALL DOOR HARDWARE TO BE FL. ADA COMPLIANT.
21. ALL EXTERIOR WALLS, DOORS AND WINDOWS ARE EXISTING U.N.O.
22. ALL FINISHES TO BE PER CLASS INDICATED ON A-004
23. NO CONSTRUCTION SHALL OCCUR WITHOUT SHOP DRAWING APPROVAL. SHOP DRAWINGS TO BE PROVIDED TO ARCHITECT FOR REVIEW UPON BEING REVIEWED AND SIGNED/DATED BY THE GENERAL CONTRACTOR AND SHALL INCLUDE BUT NOT BE LIMITED TO THE FOLLOWING ITEMS:
   - CABINETRY MILLWORK
   - RUNNING TRIM AND CASING PROFILES
   - PAINT/LAMINATE COLOR SAMPLES
   - ACOUSTICAL CEILING AND GRID
   - TOILET ACCESSORIES
   - KITCHEN EQUIPMENT
   - ROOF PENETRATIONS
   - HVAC EQUIPMENT
   - PLUMBING EQUIPMENT AND FIXTURES
   - ELECTRICAL EQUIPMENT AND FIXTURES
24. PRIOR TO COMMENCING WORK, THE CONTRACTOR SHALL SUBMIT (2) COPIES OF MATERIAL SAFETY DATA SHEETS (MSDS) FOR ALL PRODUCTS USED TO PERFORM THE WORK.

ABBREVIATIONS

ABV	ABOVE
AFF	ABOVE FINISH FLOOR
ACT	ACOUSTICAL CEILING TILE
AHU	AIR HANDLER UNIT
AL	ALUMINUM
AB	ANCHOR BOLT
@	AT
BM	BEAM
BRG	BEARING
BLK	BLOCK
BD	BOARD
BTM	BOTTOM
BLDG	BUILDING
BUR	BUILT-UP ROOF
CAB	CABINET
CPT	CARPET
CF	CEILING FINISH
CIP	CAST IN PLACE
CLG	CEILING
CL	CENTER LINE
CT	CERAMIC TILE
CLR	CLEAR
COL	COLUMN
CONC	CONCRETE
CMU	CONCRETE MASONRY UNIT
CONT	CONTINUOUS
CJ	CONTROL JOINT
DIA	DIAMETER
DEMO	DEMOLITION
DR	DOOR
DN	DOWN
DS	DOWNSPOUT
DWG	DRAWINGS
ELEC	ELECTRICAL
EWC	ELECTRIC WATER COOLER
ELEV	ELEVATION
EQ	EQUAL
EXIST	EXISTING
EJ	EXPANSION JOINT
EXT	EXTERIOR
FIN	FINISH
FV	FIELD VERIFY
FE	FIRE EXTINGUISHER
FLR	FLOOR
FD	FLOOR DRAIN
FTG	FOOTING
FR	FIRE RETARDANT
GA	GAUGE
GC	GENERAL CONTRACTOR
GALV	GALVANIZED
GFI	GROUND FAULT INTERRUPT
GYP	GYPSUM
HC	HANDICAPPED
HDW	HARDWARE
HT	HEIGHT
HDR	HEADER
HM	HOLLOW METAL
IC	INSTALLED BY CONTRACTOR
IO	INSTALLED BY OWNER
INSUL	INSULATION
INT	INTERIOR
JAN	JANITOR
JT	JOINT
LAM	LAMINATED
LF	LINEAR FEET
MANUF	MANUFACTURER
MAX	MAXIMUM
MO	MASONRY OPENING
MECH	MECHANICAL
MEMB	MEMBRANE
MTL	METAL
MIN	MINIMUM
N/A	NOT APPLICABLE
NIC	NOT IN CONTRACT
NTS	NOT TO SCALE
#, NO	NUMBER
OA	OVERALL
OC	ON CENTER
OCC	OCCUPANCY
OPNG	OPENING
OPP	OPPOSITE
OH	OVERHANG
PAV	PAVERS
PNT	PAINTED
PR	PAIR
PBO	PURCHASED BY OWNER
PF	PRE-FINISHED/PRIMED
PL	PLATE
PLMB	PLUMBING
PLYWD	PLYWOOD
PT	PRESSURE TREATED
POR	POINT OF REFERENCE
QT	QUARRY TILE
R	RADIUS
RCP	REFLECTED CEILING PLAN
REINF	REINFORCED
RENO	RENOVATION
REQ'D	REQUIRED
RD	ROOF DRAIN
RM	ROOM
RO	ROUGH OPENING
S	STAIN
SECT	SECTION
SIM	SIMILAR
SC	SOLID CORE
ST	STUCCO
SPEC	SPECIFICATION
SF	SQUARE FOOT
SS	STAINLESS STEEL
STL	STEEL
STRUCT	STRUCTURAL
STD	STANDARD
TR	TRUSS
TG	TEMPERED GLASS
TEXT	TEXTURED
TYP	TYPICAL
T&G	TONGUE & GROOVE
T&B	TOP & BOTTOM
UL	UNDERWRITERS LAB
UNO	UNLESS NOTED OTHERWISE
VP	VAPOR BARRIER
VB	VINYL BASE
VCT	VINYL COMPOSITION-TILE
VWC	VINYL WALL COVERING
WC	WATER COOLER
WH	WATER HEATER
WWF	WELDED WIRE FABRIC
WD	WOOD
W/	WITH
W/O	WITHOUT

PRIOJECT NARRATIVE

THE FOLLOWING NARRATIVE SHALL OUTLINE THE PROJECT SCOPE OF THE FOLLOWING SET OF CONTRACT DOCUMENTS BUT IS NOT LIMITED TO THIS NARRATIVE. REFER TO DRAWINGS FOR MORE INFORMATION:

BASE BID: CONTRACTOR SHALL DEMOLISH EXISTING RESTROOM 106 AND SAW CUT FLOOR AS SHOWN ON A-050. RUN LINES FOR WASTE AND FLOOR DRAINS TO EXISTING DRAIN LINE ALSO RUN HOT AND COLD WATER LINES AS REQUIRED THROUGHOUT FOR FIXTURES CALLED-OUT. CONSTRUCT NEW WALLS AS SHOWN IN DRAWINGS ON A-101. INSTALL NEW KITCHENETTE WITH CABINETS, COUNTER AND SINK AS SHOWN WITH WATER HEATER TO SUPPLY HOT WATER TO SINK AND RESTROOM 106 & 107 LAVATORIES. INSTALL ALL RESTROOM ACCESSORY EQUIPMENT, DOORS, MILLWORK, ELECTRICAL AND PLUMBING, AND OTHER EQUIPMENT AS SHOWN. CONTRACTOR SHALL RESTORE BREAK ROOM 105 AFTER INSTALL OF NEW RESTROOMS. CONTRACTOR SHALL ALSO POUR NEW STOOP FOOTING IN FRONT OF ENTRY VESTIBULE 100.

ALTERNATE #1: CONTRACTOR SHALL REMOVE EXISTING DOOR ON NORTH EAST SIDE OF RESTROOM 120 AND INFILL THE DOORWAY WITH WALL TYPE 1, REFER TO SHEET A-002. CONTRACTOR SHALL THEN SAW CUT CONCRETE FLOOR TO LOCATE EXISTING DRAIN LINE AND INSTALL A NEW 3" SANITARY LINE TO THE FLANGE LOCATION SHOWN FOR INSTALL OF EXISTING TOILET SALVAGED FROM RESTROOM 106. CONTRACTOR TO POUR NEW CONCRETE IN SAW CUT AREA AND RESTORE FLOOR AREA. CONTRACTOR TO RUN WATER FROM EXISTING, ADJACENT SINK FOR THE TOILET THEN INSTALL NEW GRAB BARS AS SHOWN. CONTRACTOR SHALL RESTORE RESTROOM 120 AFTER INSTALL OF TOILET.

ALTERNATE #2: CONTRACTOR SHALL RUN NEW HOT AND COLD WATER LINES AND ELECTRICAL FOR OWNER SUPPLIED WASHER AND DRYER. CONTRACTOR SHALL ALSO SAW-CUT CONCRETE AS SHOWN TO ACCESS WASTE LINE TO INSTALL NEW 2" WASTE LINE FOR WASHER DRAIN. CONTRACTOR SHALL INSTALL NEW 4" DRYER VENT AND RESTORE MECHANICAL ROOM 126.

ALTERNATE #3: CONTRACTOR SHALL REMOVE EXISTING ROOF ON ENTRY VESTIBULE 100 TO THE DECKING. CONTRACTOR SHALL THEN COVER THE ENTIRE ROOF WITH GRACE, SELF-ADHEREING, WATER AND ICE SHIELD AND PREP FOR NEW FIRESTONE UC-14 ROOF. CONTRACTOR SHALL INSTALL NEW 24GA UC-14 ROOF AND ALL ACCESSORIES PER MANUFACTURER'S RECOMMENDATIONS. CONTRACTOR SHALL THEN INSTALL NEW 6" GUTTERS AND DOWNS WITH SHUR-FLO GUTTER GUARDS AND NEW S-5! COLORGARD SNOW-BAR GUARDS OVER ENTIRE PERIMETER OF ROOF. ALL MATERIALS TO BE DARK BRONZE.

ALTERNATE #4: CONTRACTOR SHALL REMOVE ALL CEILING TILES AND LIGHTING THROUGHOUT RECEPTION 101, CORRIDOR 102, AND CONFERENCE 110. CEILING GRID TO REMAIN. CONTRACTOR SHALL INSTALL NEW LED LIGHTING IN EXISTING LIGHTING LOCATIONS, FIELD VERIFY QUANTITY AND LOCATIONS. CONTRACTOR SHALL THEN INSTALL NEW ARMSTRONG ULTIMA TEGULAR 1904 TILES THROUGHOUT THESE ROOMS. AFTER INSTALL OF LIGHTING AND CEILING TILES, CONTRACTOR SHALL INSTALL NEW CARPET TILE THROUGHOUT CONFERENCE 110. CARPET TILES TO BE SHAW - NATURAL PALETTE TILES. STYLE AND COLOR TO BE DETERMINED BY DNR INSPECTOR. AREA OF CARPET TILES IS ROUGHLY 720 SF, CONTRACTOR TO FIELD VERIFY.

* CONTRACTOR SHALL COMPLY WITH ALL BUILDING, ELECTRICAL AND MECHANICAL CODES AND ORDINANCES.

WALLTYPES

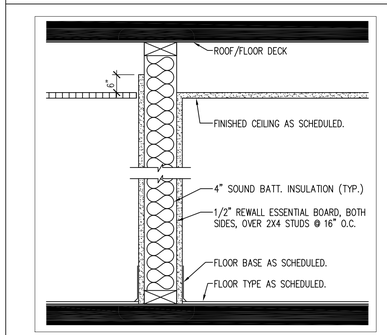

01 NON-RATED/NON-LOAD BEARING
2X4 INTERIOR WET WALL

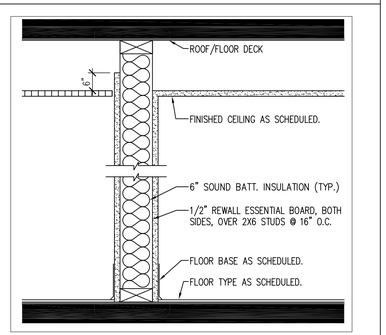

02 NON-RATED/NON-LOAD BEARING
2X6 INTERIOR WET WALL

CONSULTANT:

IOWA DEPARTMENT OF NATURAL RESOURCES
ENGINEERING SERVICES - WALLACE BUILING
502 E. 9TH ST., DES MOINES, IA 50319-0034
P: 515.725.8200
F: 515.725.8202

WALL TYPES, NOTES & SYMBOLS

RESTROOM RENOVATION FOR:
STATE FOREST NURSERY

24040 SOUTH DUFF AVENUE
AMES, IA 50010

NO.	BY DATE	REVISION

DRAWN BY:
PROJECT NUMBER: 19-02-85-01
CHK'D BY:
DATE: 05.30.2018
SHEET No: **A-002**

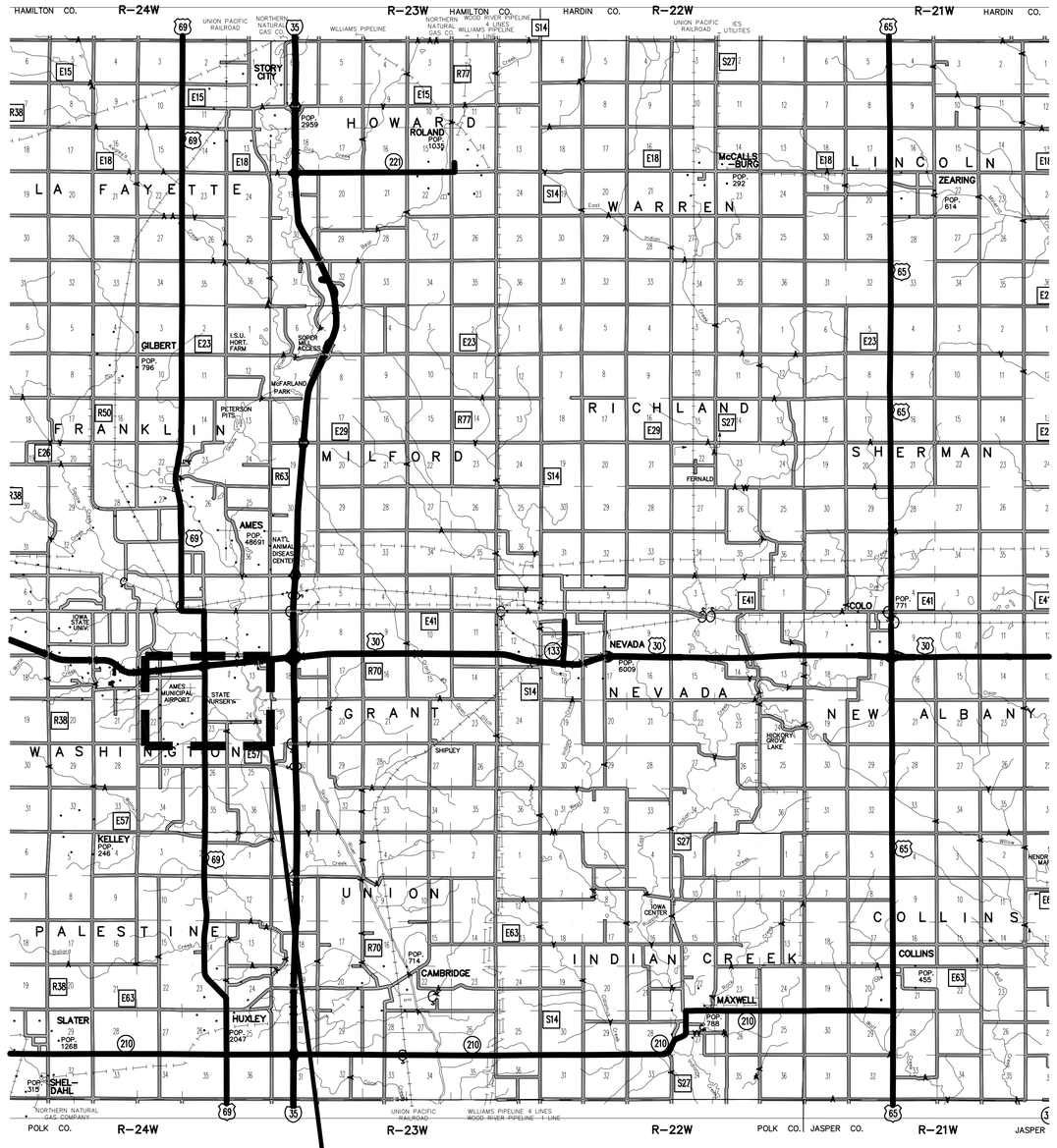

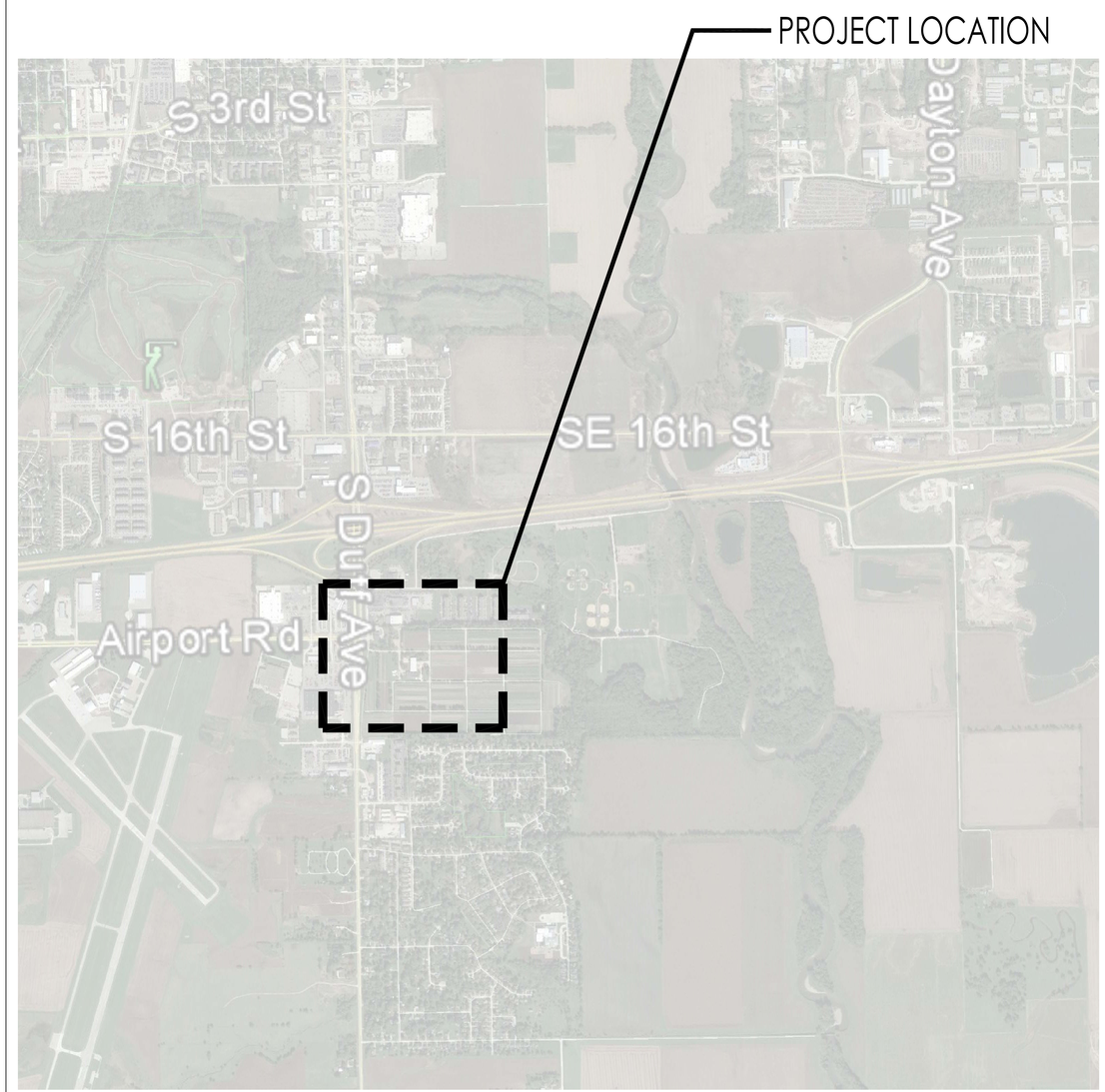

CONSULTANT:

IOWA DEPARTMENT OF NATURAL RESOURCES

ENGINEERING SERVICES - WALLACE BUILING
502 E. 9TH ST., DES MOINES, IA 50319-0034
P: 515.725.8200
F: 515.725.8202

PROJECT LOCATION

RESTROOM RENOVATION FOR:

STATE FOREST NURSERY

24040 SOUTH DUFF AVENUE
AMES, IA 50010

NO.	BY / DATE	REVISION

DRAWN BY:
PROJECT NUMBER: 19-02-85-01
CHK'D BY:
DATE: 05.30.2018

SHEET No:

A-003

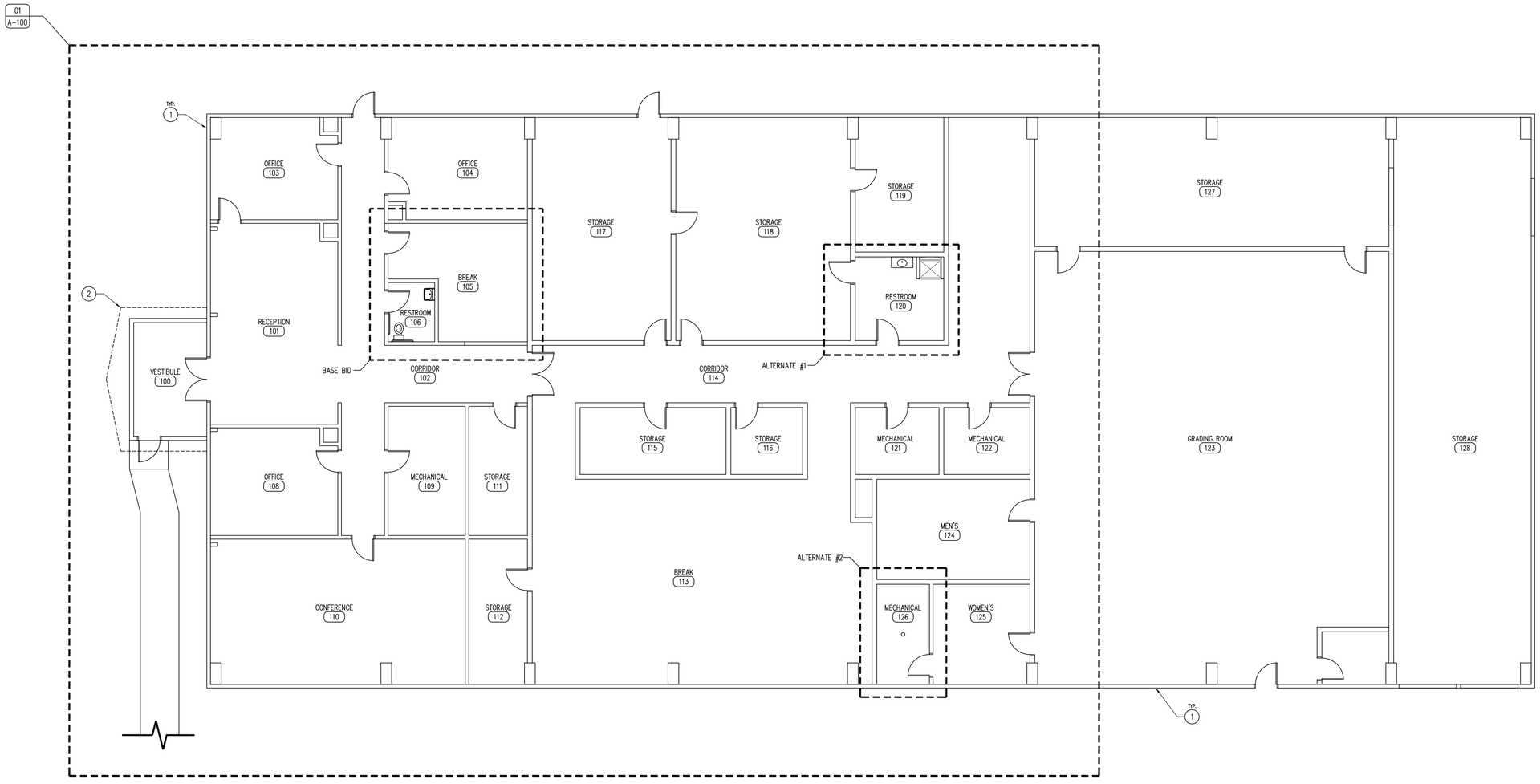

01 OVERALL EXISTING FLOOR PLAN
SCALE: 1/8" = 1'-0"

KEYNOTES

1. EXISTING STATE FORESTRY NURSERY OFFICE BUILDING, REFER TO SHEET A-100 FOR MORE INFORMATION.
2. ALTERNATE #3: ENTRY VESTIBULE ROOF REPLACEMENT.

GENERAL NOTES

A. REFER TO FINISH & DOOR SCHEDULE, SHEET A-600.
B. REFER TO INDEX SHEET FOR WALL TYPES, SHEET A-002.
C. FIELD VERIFY ALL DIMENSIONS PRIOR TO CONSTRUCTION, A-100.
D. ELECTRICAL CONTRACTOR TO DETERMINE NEEDS OF JOB AS DESCRIBED IN BID DOCUMENTS. ALL ELECTRICAL SHALL BE NEC COMPLIANT AND UP TO ALL CODES AND ORDINANCES REQUIRED BY LAW. ALL OUTLETS TO BE MOUNTED AT 18" A.F.F. UNLESS OTHERWISE NOTED.
E. FIELD VERIFY EQUIPMENT LOCATIONS FOR ELECTRICAL OUTLET LOCATIONS. ALL NEW LIGHTING IN OFFICE AREA TO BE LOCATED IN EXISTING LIGHTING LOCATIONS, CONTRACTOR TO VERIFY QUANTITY.
F. PLUMBING CONTRACTOR TO DETERMINE NEEDS OF JOB AS DESCRIBED IN BID DOCUMENTS. ALL PLUMBING SHALL BE CODE COMPLIANT. CONTRACTOR TO PROVIDE HOT AND COLD WATER, WASTE LINES AND ALL OTHER ITEMS NEEDED FOR PLUMBING FIXTURES NO EXPLICITLY SHOWN IN BID DOCUMENTS.
G. ALL PLYWOOD PRODUCTS TO HAVE NO ADDED UREA-FORMALDEHYDE (NAUF). ALL PLYWOOD CABINET AND DRAWER SURFACES TO HAVE VOC FREE CLEAR SATIN FINISH.

CONSULTANT:

IOWA DEPARTMENT OF NATURAL RESOURCES
ENGINEERING SERVICES - WALLACE BUILING
502 E. 9TH ST., DES MOINES, IA 50319-0034
P: 515.725.8200
F: 515.725.8202

OVERALL EXISTING PLAN

RESTROOM RENOVATION FOR:
STATE FOREST NURSERY
24040 SOUTH DUFF AVENUE
AMES, IA 50010

NO.	BY DATE	REVISION

DRAWN BY:
PROJECT NUMBER: 19-02-85-01
CHK'D BY:
DATE: 05.30.2018
SHEET No: A-010

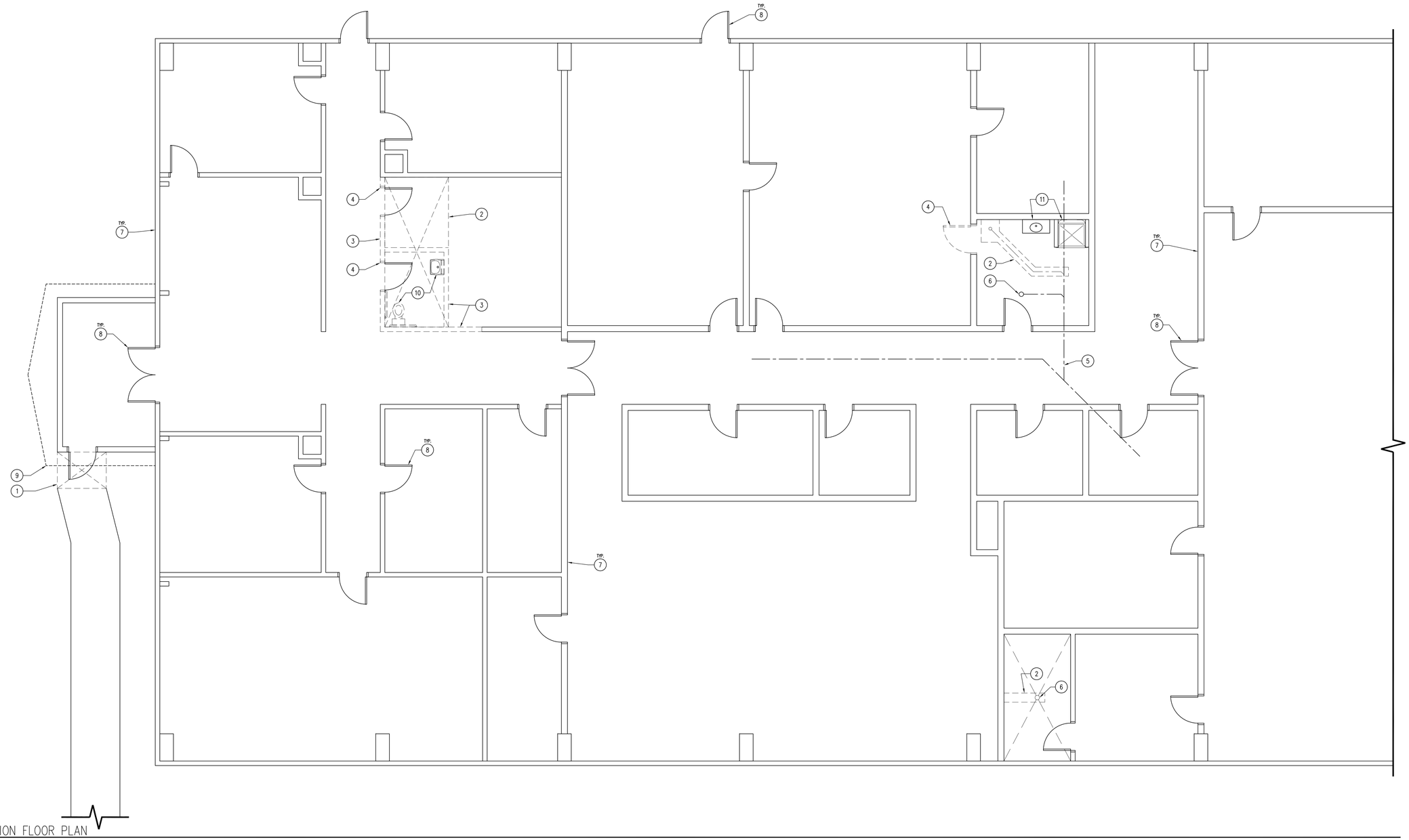

01 DEMOLITION FLOOR PLAN
SCALE: 3/16" = 1'-0"

KEYNOTES

1. REMOVE FIRST SECTION OF CONCRETE SIDEWALK.
2. SAW CUT CONCRETE FLOOR AND REMOVE IN AREA SHOWN. CONTRACTOR TO LOCATE UNDERGROUND UTILITIES AND PREP FOR NEW RELOCATION AS SHOWN IN SHEET A-100.
3. DEMOLISH EXISTING WALL IN AREA AS SHOWN.
4. DEMOLISH DOOR.
5. EXISTING PLUMBING LINE UNDER-FLOOR.
6. EXISTING FLOOR DRAIN TO REMAIN.
7. EXISTING BUILDING WALLS TO REMAIN.
8. EXISTING DOOR TO REMAIN.
9. ALTERNATE #3: ENTRY VESTIBULE ROOF LINE ABOVE. DEMOLISH EXISTING CEDAR SHINGLE ROOF AND INSPECT AND PREP ROOF DECKING FOR NEW ROOF.
10. REMOVE EXISTING PLUMBING FIXTURES. PROTECT EXISTING TOILET FOR INSTALLATION IN CLOSET RESTROOM.
11. EXISTING PLUMBING TO REMAIN.

GENERAL NOTES

A. REFER TO FINISH & DOOR SCHEDULE, SHEET A-600.
B. REFER TO INDEX SHEET FOR WALL TYPES, SHEET A-002.
C. FIELD VERIFY ALL DIMENSIONS PRIOR TO CONSTRUCTION, A-100.
D. ELECTRICAL CONTRACTOR TO DETERMINE NEEDS OF JOB AS DESCRIBED IN BID DOCUMENTS. ALL ELECTRICAL SHALL BE NEC COMPLIANT AND UP TO ALL CODES AND ORDINANCES REQUIRED BY LAW. ALL OUTLETS TO BE MOUNTED AT 18" A.F.F. UNLESS OTHERWISE NOTED.
E. FIELD VERIFY EQUIPMENT LOCATIONS FOR ELECTRICAL OUTLET LOCATIONS. ALL NEW LIGHTING IN OFFICE AREA TO BE LOCATED IN EXISTING LIGHTING LOCATIONS, CONTRACTOR TO VERIFY QUANTITY.
F. PLUMBING CONTRACTOR TO DETERMINE NEEDS OF JOB AS DESCRIBED IN BID DOCUMENTS. ALL PLUMBING SHALL BE CODE COMPLIANT. CONTRACTOR TO PROVIDE HOT AND COLD WATER, WASTE LINES AND ALL OTHER ITEMS NEEDED FOR PLUMBING FIXTURES NO EXPLICITLY SHOWN IN BID DOCUMENTS.
G. ALL PLYWOOD PRODUCTS TO HAVE NO ADDED UREA-FORMALDEHYDE (NAUF). ALL PLYWOOD CABINET AND DRAWER SURFACES TO HAVE VOC FREE CLEAR SATIN FINISH.

CONSULTANT:

IOWA DEPARTMENT OF NATURAL RESOURCES
ENGINEERING SERVICES - WALLACE BUILING
502 E. 9TH ST., DES MOINES, IA 50319-0034
P: 515.725.8200
F: 515.725.8202

REFERENCE FLOOR PLAN

RESTROOM RENOVATION FOR:
STATE FOREST NURSERY

24040 SOUTH DUFF AVENUE
AMES, IA 50010

NO.	BY / DATE	REVISION

DRAWN BY:
PROJECT NUMBER: 19-02-85-01
CHK'D BY:
DATE: 05.30.2018

SHEET No:
A-050

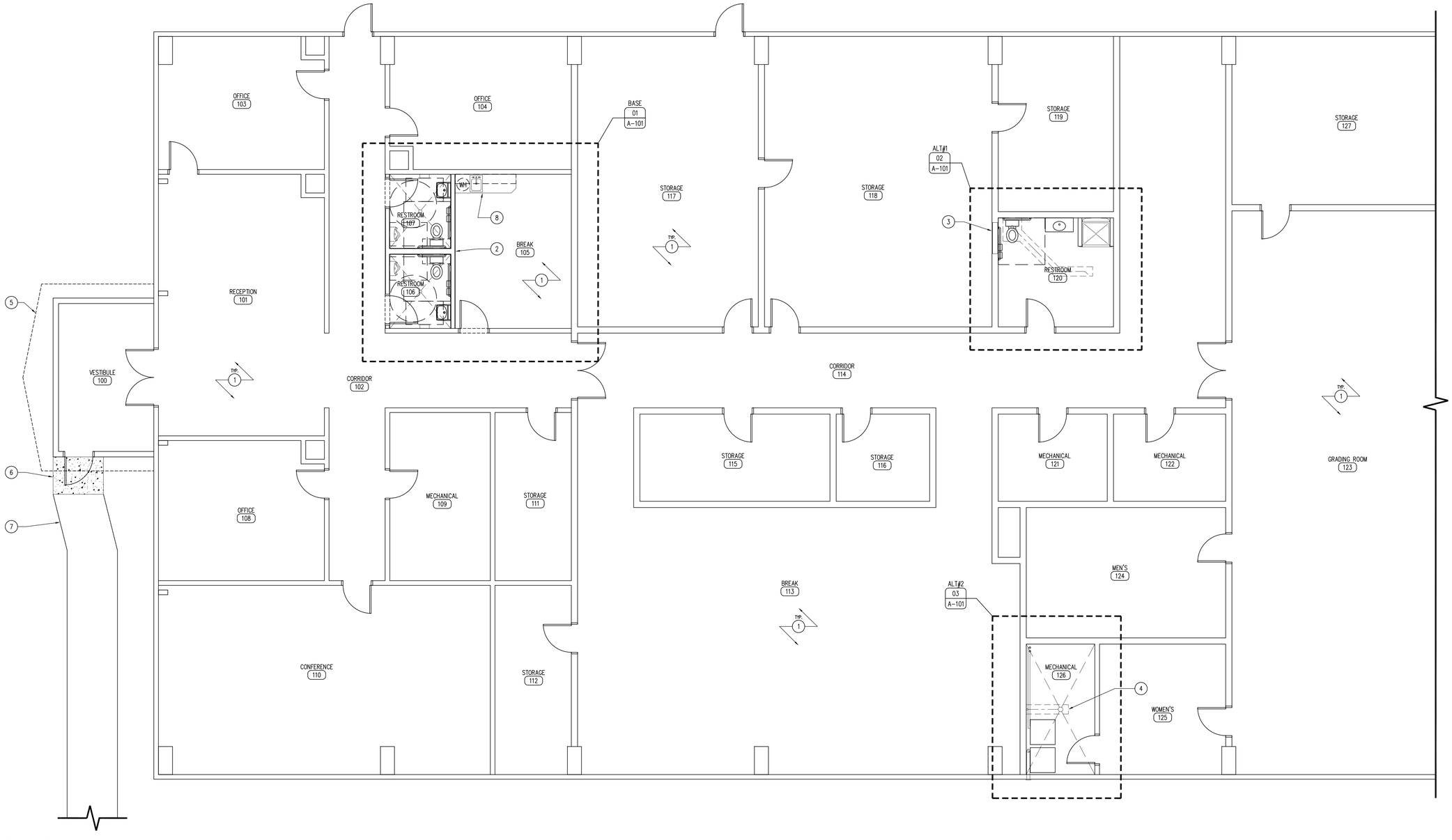

01 REFERENCE FLOOR PLAN
SCALE: 3/16" = 1'-0"

KEYNOTES

1. EXISTING AREA TO REMAIN.
2. NEW RESTROOM AREA, REFER TO SHEET A-101.
3. ALTERNATE #1: TOILET ADDITION TO CLOSET AREA, REFER TO A-100 FOR MORE DETAILS. SEE ENLARGED PLANS A-101.
4. ALTERNATE #2: NEW DRAIN LINE AND WATER LINES TO WASHER LOCATION, DRYER VENT OUT SIDE OF BUILDING. SEE ENLARGED PLANS A-101
5. ALTERNATE #3: ENTRY VESTIBULE ROOF REPLACEMENT.
6. STOOP FOOTING, REFER TO A-002 FOR DETAILS.
7. EXISTING SIDEWALK TO REMAIN.
8. NEW KITCHENETTE AREA, REFER TO SHEET A-101.

GENERAL NOTES

A. REFER TO FINISH & DOOR SCHEDULE, SHEET A-600.
B. REFER TO INDEX SHEET FOR WALL TYPES, SHEET A-002.
C. FIELD VERIFY ALL DIMENSIONS PRIOR TO CONSTRUCTION, A-100.
D. ELECTRICAL CONTRACTOR TO DETERMINE NEEDS OF JOB AS DESCRIBED IN BID DOCUMENTS. ALL ELECTRICAL SHALL BE NEC COMPLIANT AND UP TO ALL CODES AND ORDINANCES REQUIRED BY LAW. ALL OUTLETS TO BE MOUNTED AT 18" A.F.F. UNLESS OTHERWISE NOTED.
E. FIELD VERIFY EQUIPMENT LOCATIONS FOR ELECTRICAL OUTLET LOCATIONS. ALL NEW LIGHTING IN OFFICE AREA TO BE LOCATED IN EXISTING LIGHTING LOCATIONS, CONTRACTOR TO VERIFY QUANTITY.
F. PLUMBING CONTRACTOR TO DETERMINE NEEDS OF JOB AS DESCRIBED IN BID DOCUMENTS. ALL PLUMBING SHALL BE CODE COMPLIANT. CONTRACTOR TO PROVIDE HOT AND COLD WATER, WASTE LINES AND ALL OTHER ITEMS NEEDED FOR PLUMBING FIXTURES NO EXPLICITLY SHOWN IN BID DOCUMENTS.
G. ALL PLYWOOD PRODUCTS TO HAVE NO ADDED UREA-FORMALDEHYDE (NAUF). ALL PLYWOOD CABINET AND DRAWER SURFACES TO HAVE VOC FREE CLEAR SATIN FINISH.

CONSULTANT:

IOWA DEPARTMENT OF NATURAL RESOURCES
ENGINEERING SERVICES - WALLACE BUILING
502 E. 9TH ST., DES MOINES, IA 50319-0034
P: 515.725.8200
F: 515.725.8202

REFERENCE FLOOR PLAN

RESTROOM RENOVATION FOR:
STATE FOREST NURSERY

24040 SOUTH DUFF AVENUE
AMES, IA 50010

NO.	BY / DATE	REVISION

DRAWN BY:
PROJECT NUMBER: 19-02-85-01
CHK'D BY:
DATE: 05.30.2018

SHEET No:
A-100

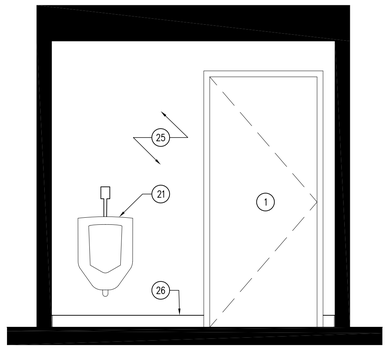

07 INTERIOR ELEVATION
SCALE: 1/2" = 1'-0"

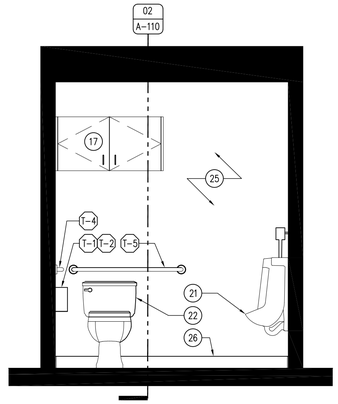

06 INTERIOR ELEVATION
SCALE: 1/2" = 1'-0"

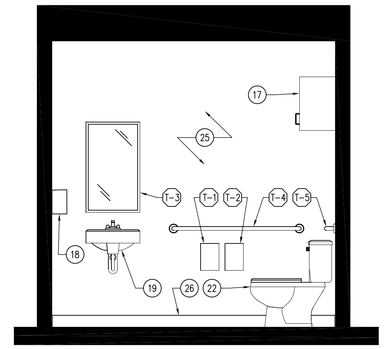

05 INTERIOR ELEVATION
SCALE: 1/2" = 1'-0"

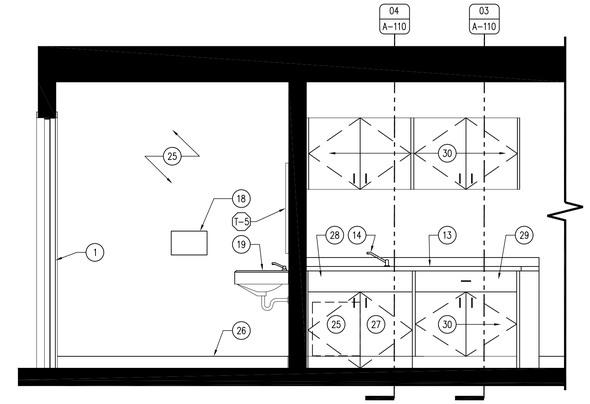

04 INTERIOR ELEVATION
SCALE: 1/2" = 1'-0"

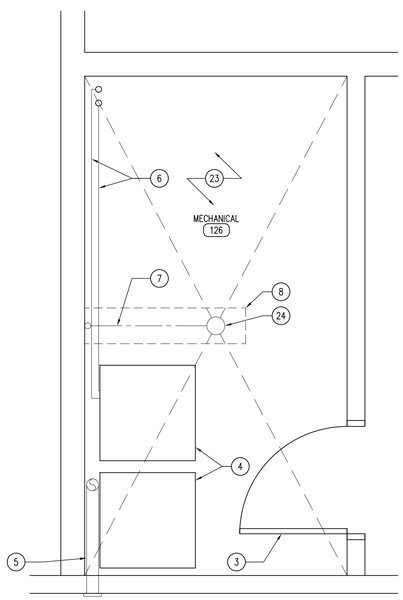

03 ALTERNATE #2: ENLARGED PLAN – MECHANICAL 126
SCALE: 1/2" = 1'-0"

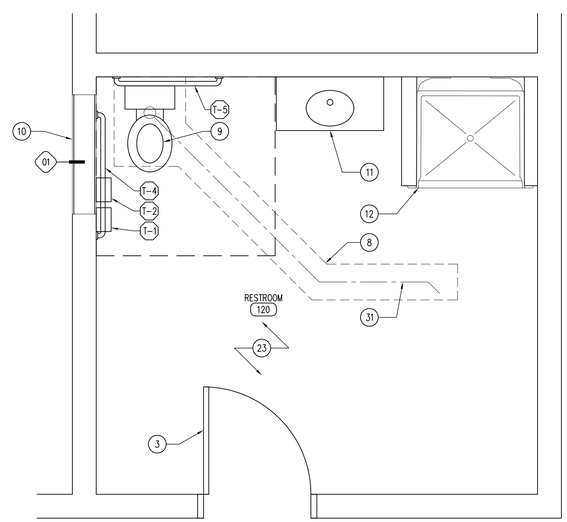

02 ALTERNATE #1: ENLARGED PLAN – RESTROOM 120
SCALE: 1/2" = 1'-0"

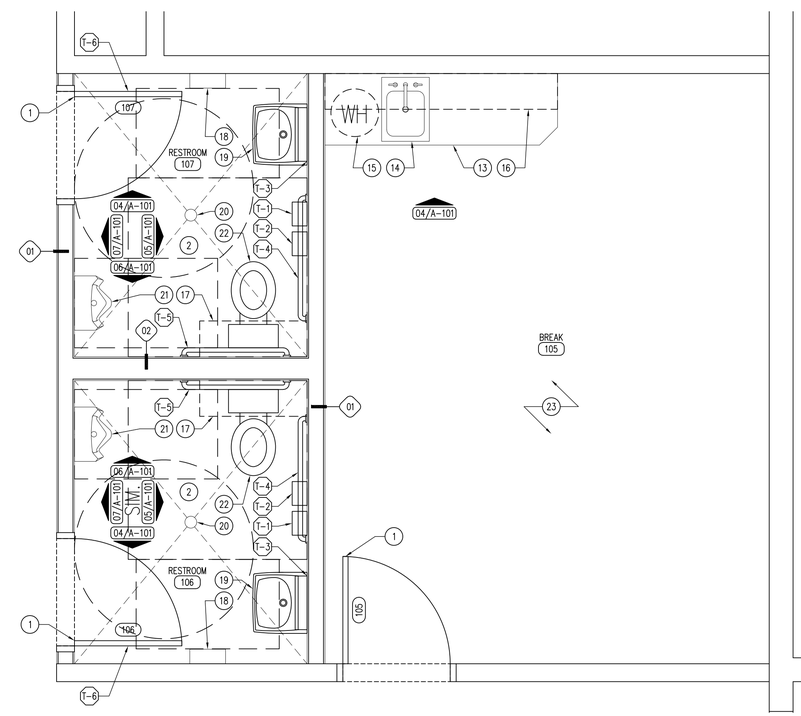

01 ENLARGED PLAN – BREAK 105, RESTROOM 106 & 107
SCALE: 1/2" = 1'-0"

TOILET ACCESSORY SCHEDULE

ALL MODEL NUMBERS BASED ON BOBRICK WASHROOM EQUIPMENT UNLESS OTHERWISE NOTED.

T-1 SURFACE MOUNTED SANITARY NAPKIN DISPOSAL
B-270

T-2 SURFACE MOUNTED TOILET TISSUE DISPENSER
B-4288

T-3 WELDED FRAMED MIRROR – MOUNT BOTTOM EDGE OF MIRROR 40" AFF
B-290 2448

T-4 42" LONG X 1-1/2" DIAMETER, CONCEALED MOUNTING, STRAIGHT GRAB BAR
B-6806 x 42

T-5 36" LONG X 1-1/2" DIAMETER, CONCEALED MOUNTING, STRAIGHT GRAB BAR
B-6806 x 36

T-6 COAT HOOK – CENTER ON DOOR 6'-0" A.F.F.
B-6707

KEYNOTES

1. DOOR AS SCHEDULED, REFER TO SHEET A-600.
2. 6" THICK CONCRETE BUILDING SLAB OVER 6" SUBBASE, #4 REBAR 24" O.C. BOTH DIRECTIONS.
3. EXISTING DOOR TO REMAIN.
4. WASHER/DRYER, BY OWNER, CONTRACTOR TO SUPPLY ELECTRIC POWER TO THESE AREAS.
5. 4" DIAMETER DRYER VENT, TERMINATE WITH MANUFACTURER SUPPLIED WALL HOOD.
6. HOT AND COLD WATER SUPPLY TO WASHING MACHINE.
7. 2" DRAIN LINE TO EXISTING IN-FLOOR SANITARY LINE.
8. 6" THICK CONCRETE DOWELED INTO EXISTING SLAB WITH #8 DOWELS 18" O.C.
9. SALVAGED TOILET STOOL FROM RESTROOM 106, INSTALL OVER NEW 3" SANITARY LINE.
10. IN-FILL WALL SECTION.
11. EXISTING VANITY TO REMAIN, RUN WATER TO TOILET FROM COLD WATER LINE.
12. EXISTING SHOWER TO REMAIN.
13. SOLID SURFACE CORIAN COUNTER TOP, LAVA ROCK.
14. UNDER-MOUNT STAINLESS STEEL BAR SINK. ELKAY ECTRU12179, WITH DELTA SIGNATURE FAUCET, MODEL #470-AR-DST.
15. ELECTRIC WATER HEATER, BRADFORD WHITE REU-2U6.
16. ¾" PLYWOOD CABINET WITH HARDWOOD VENEER (WD-1) ON CONCEALED HINGES, PROVIDE DECORATIVE HARDWARE WIRE PULLS (DARK BRONZE). REFER TO SHEET A-110.
17. ¾" PLYWOOD CABINET WITH HARDWOOD VENEER (WD-1) ON CONCEALED HINGES, PROVIDE DECORATIVE HARDWARE WIRE PULLS (DARK BRONZE) WITH CYLINDER LOCK. REFER TO SHEET A-110.
18. CPC9-SS EXTREME-AIR HAND DRYER.
19. WALL MOUNTED LAVATORY SINK, AMERICAN STANDARD 0954.000 WITH DELTA 21C FAUCET, METAL POP-UP AND TRAP. PROVIDE SCALD GUARDS..
20. FLOOR DRAIN, RUN NEW 3" LINE TO EXISTING SANITARY LINE, FLOOR DRAIN TO BE ZURN ZB-415-6B-P-ZB.
21. FLUSH-VALVE URINAL, AMERICAN STANDARD 6561.017 WITH SLOAN ROYAL 186 TRIM.
22. ADA HEIGHT TOILET, KOHLER K-3979 WITH ELONGATED SEAT, COVER AND ⅜" NPT SUPPLY WITH STOP.
23. EXISTING FLOORING TO REMAIN.
24. EXISTING FLOOR DRAIN.
25. WALL FINISH AS SCHEDULED, REFER TO SHEET A-600.
26. RUBBER BASE, REFER TO SHEET A-600.
27. ADA BASE CABINET, REFER TO A-110 FOR MORE INFORMATION.
28. ¾" PLYWOOD VALENCE WITH HARDWOOD VENEER (WD-1).
29. ¾" PLYWOOD DRAWER WITH UNDERMOUNT SLIDES WITH WOOD VENEER (WD-1). PROVIDE DECORATIVE HARDWARE WIRE PULLS (DARK BRONZE), REFER TO FINISH SCHEDULE SHEET A-600.
30. ¾" PLYWOOD BASE CABINET WITH HARDWOOD VENEER (WD-1) ON CONCEALED HINGES, PROVIDE DECORATIVE HARDWARE WIRE PULLS (DARK BRONZE). REFER TO SHEET A-110.
31. 4" SANITARY WASTE LINE TO EXISTING IN-FLOOR SANITARY LINE.

GENERAL NOTES

A. REFER TO FINISH & DOOR SCHEDULE, SHEET A-600.
B. REFER TO INDEX SHEET FOR WALL TYPES, SHEET A-002.
C. FIELD VERIFY ALL DIMENSIONS PRIOR TO CONSTRUCTION, A-100.
D. ELECTRICAL CONTRACTOR TO DETERMINE NEEDS OF JOB AS DESCRIBED IN BID DOCUMENTS. ALL ELECTRICAL SHALL BE NEC COMPLIANT AND UP TO ALL CODES AND ORDINANCES REQUIRED BY LAW. ALL OUTLETS TO BE MOUNTED AT 18" A.F.F. UNLESS OTHERWISE NOTED.
E. FIELD VERIFY EQUIPMENT LOCATIONS FOR ELECTRICAL OUTLET LOCATIONS. ALL NEW LIGHTING IN OFFICE AREA TO BE LOCATED IN EXISTING LIGHTING LOCATIONS, CONTRACTOR TO VERIFY QUANTITY.
F. PLUMBING CONTRACTOR TO DETERMINE NEEDS OF JOB AS DESCRIBED IN BID DOCUMENTS. ALL PLUMBING SHALL BE CODE COMPLIANT. CONTRACTOR TO PROVIDE HOT AND COLD WATER, WASTE LINES AND ALL OTHER ITEMS NEEDED FOR PLUMBING FIXTURES NO EXPLICITLY SHOWN IN BID DOCUMENTS.
G. ALL PLYWOOD PRODUCTS TO HAVE NO ADDED UREA-FORMALDEHYDE (NAUF). ALL PLYWOOD CABINET AND DRAWER SURFACES TO HAVE VOC FREE CLEAR SATIN FINISH.

CONSULTANT:

IOWA DEPARTMENT OF NATURAL RESOURCES
ENGINEERING SERVICES - WALLACE BUILING
502 E. 9TH ST., DES MOINES, IA 50319-0034
P: 515.725.8200
F: 515.725.8202

ENLARGED PLANS & ELEVATIONS

RESTROOM RENOVATION FOR:
STATE FOREST NURSERY
24040 SOUTH DUFF AVENUE
AMES, IA 50010

NO.	BY / DATE	REVISION

DRAWN BY:
PROJECT NUMBER: 19-02-85-01
CHK'D BY:
DATE: 05.30.2018

SHEET No:
A-101

05 NOT USED
SCALE: 3/16" = 1'-0"

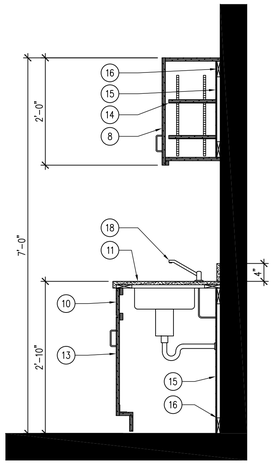

04 MILLWORK SECTION
SCALE: 3/4" = 1'-0"

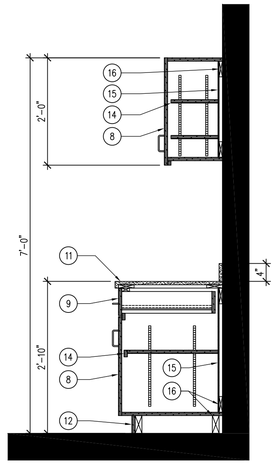

03 MILLWORK SECTION
SCALE: 3/4" = 1'-0"

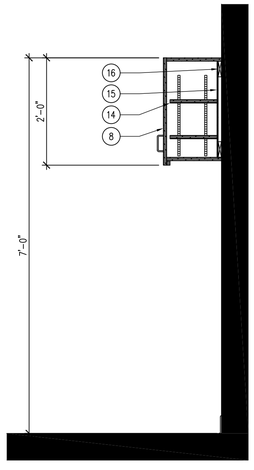

02 MILLWORK SECTION
SCALE: 3/4" = 1'-0"

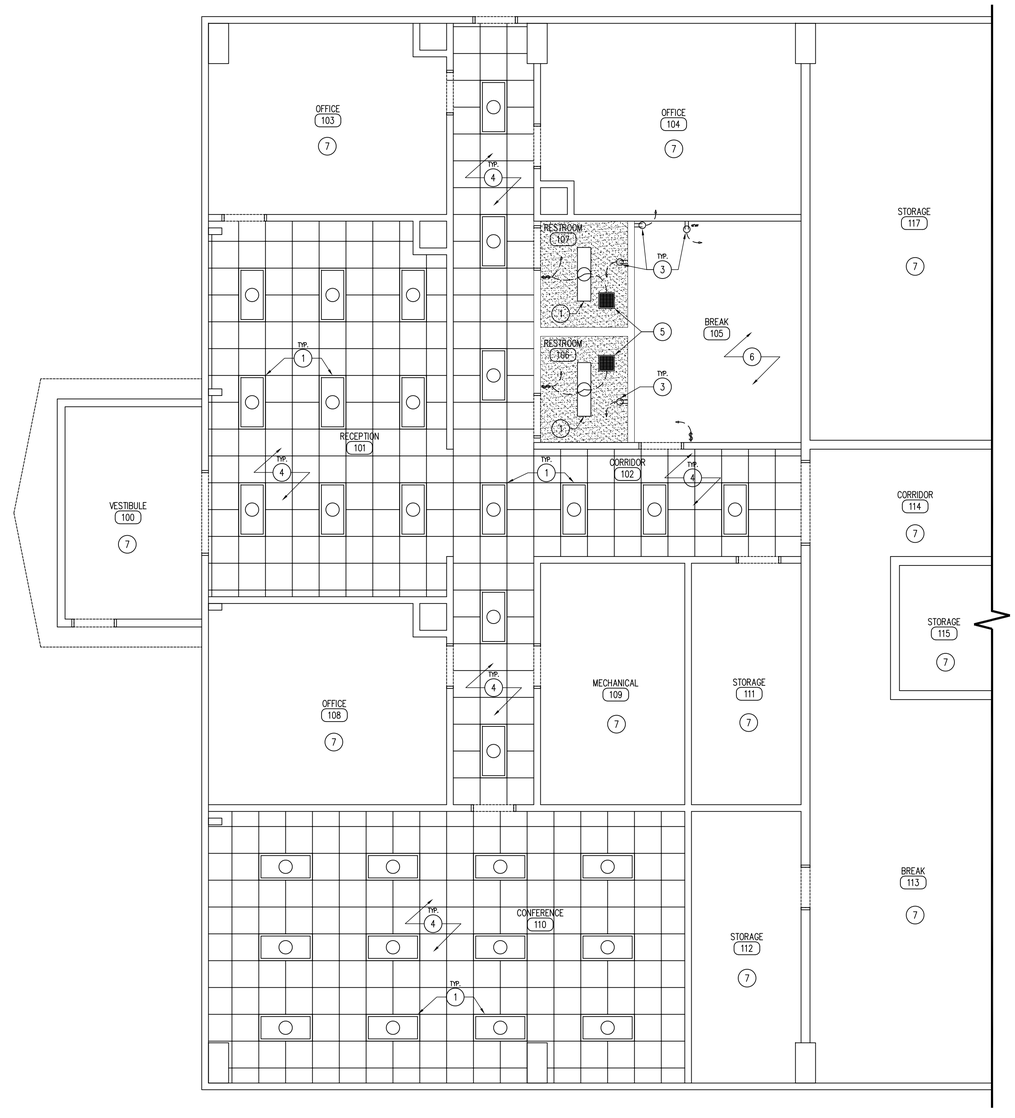

01 REFLECTED CEILING PLAN
SCALE: 3/16" = 1'-0"

LIGHTING LEGEND

- LED OFFICE LIGHT: LITHONIA 2FSL4-40L-EZ1-LP840
- LED SURFACE MOUNTED LIGHT: KENALL MLHA12-48R-MW-PP-1-45L40K-DCC-1-DV-EL
- $ SINGLE-POLE LIGHT SWITCH
- 120V OUTLET – 18" A.F.F. UNLESS OTHERWISE NOTED
- EXHAUST FAN: GREENHECK SP-B110

KEYNOTES

1. ALTERNATE #4: ELECTRICAL LIGHT FIXTURE. REFER TO LIGHTING LEGEND FOR FIXTURE SPECIFICATIONS.
2. DOOR HEADER BELOW.
3. 110V GFCI DUPLEX OUTLET, COLOR TO BE WHITE.
4. ALTERNATE #4: REPLACE EXISTING CEILING TILES IN RECEPTION, CORRIDORS AND CONFERENCE ROOM WITH NEW ARMSTRONG, ULTIMA TEGULAR 2X4 TILES – 1904.
5. EXHAUST FAN, LIGHT SWITCH TO CONTROL. TIE EXHAUST DUCTS INTO EXISTING EXHAUST DUCTS.
6. REPAIR DROP-CEILING IN BREAK ROOM WHERE NEW WALL INTERSECTS.
7. EXISTING CEILING TO REMAIN.
8. ¾" PLYWOOD DOOR ON CONCEALED HINGES WITH WOOD VENEER (WD-1). PROVIDE DECORATIVE HARDWARE WIRE PULLS (DARK BRONZE). REFER TO FINISH SCHEDULE SHEET A-600.
9. ¾" PLYWOOD DRAWER WITH UNDERMOUNT SLIDES WITH WOOD VENEER (WD-1). PROVIDE DECORATIVE HARDWARE WIRE PULLS (DARK BRONZE), REFER TO FINISH SCHEDULE SHEET A-600.
10. ¾" PLYWOOD VALENCE WITH WOOD VENEER (WD-1). REFER TO FINISH SCHEDULE SHEET A-600.
11. ¾" SOLID SURFACE TOP (SS-1) WITH EASED EDGES. INSTALL 4" BACKSPLASH ON ALL WALLS SURROUNDING COUNTER. REFER TO FINISH SCHEDULE SHEET A-600.
12. ¾" PLYWOOD TOE-KICK WITH WOOD VENEER (WD-1).
13. ADA COMPLIANT UNDER-SINK DOORS ON CONCEALED HINGES WITH WOOD VENEER (WD-1). PROVIDE DECORATIVE HARDWARE WIRE PULLS, REFER TO FINISH SCHEDULE SHEET A-600.
14. ¾" PLYWOOD SHELF WITH PLASTIC LAMINATE (PL-1) AND HARDWOOD EDGE BANDING, PROVIDE ADJUSTABLE HARDWARE.
15. ¼" PLYWOOD BACKER BOARD WITH PLASTIC LAMINATE (PL-1).
16. WOOD BLOCKING AS REQUIRED.
17. RUBBER WALL BASE, REFER TO FINISH SCHEDULE SHEET A-600.
18. UNDER-MOUNT STAINLESS STEEL BAR SINK. ELKAY ECTRU12179, WITH DELTA SIGNATURE FAUCET, MODEL #470-AR-DST.

GENERAL NOTES

A. REFER TO FINISH & DOOR SCHEDULE, SHEET A-600.
B. REFER TO INDEX SHEET FOR WALL TYPES, SHEET A-002.
C. FIELD VERIFY ALL DIMENSIONS PRIOR TO CONSTRUCTION, A-100.
D. ELECTRICAL CONTRACTOR TO DETERMINE NEEDS OF JOB AS DESCRIBED IN BID DOCUMENTS. ALL ELECTRICAL SHALL BE NEC COMPLIANT AND UP TO ALL CODES AND ORDINANCES REQUIRED BY LAW. ALL OUTLETS TO BE MOUNTED AT 18" A.F.F. UNLESS OTHERWISE NOTED.
E. FIELD VERIFY EQUIPMENT LOCATIONS FOR ELECTRICAL OUTLET LOCATIONS. ALL NEW LIGHTING IN OFFICE AREA TO BE LOCATED IN EXISTING LIGHTING LOCATIONS, CONTRACTOR TO VERIFY QUANTITY.
F. PLUMBING CONTRACTOR TO DETERMINE NEEDS OF JOB AS DESCRIBED IN BID DOCUMENTS. ALL PLUMBING SHALL BE CODE COMPLIANT. CONTRACTOR TO PROVIDE HOT AND COLD WATER, WASTE LINES AND ALL OTHER ITEMS NEEDED FOR PLUMBING FIXTURES NO EXPLICITLY SHOWN IN BID DOCUMENTS.
G. ALL PLYWOOD PRODUCTS TO HAVE NO ADDED UREA-FORMALDEHYDE (NAUF). ALL PLYWOOD CABINET AND DRAWER SURFACES TO HAVE VOC FREE CLEAR SATIN FINISH.

CONSULTANT:

IOWA DEPARTMENT OF NATURAL RESOURCES
ENGINEERING SERVICES - WALLACE BUILING
502 E. 9TH ST., DES MOINES, IA 50319-0034
P: 515.725.8200
F: 515.725.8202

POWER AND LIGHTING PLAN

RESTROOM RENOVATION FOR:
STATE FOREST NURSERY
24040 SOUTH DUFF AVENUE
AMES, IA 50010

NO.	BY / DATE	REVISION

DRAWN BY:
PROJECT NUMBER: 19-02-85-01
CHK'D BY:
DATE: 05.30.2018
SHEET No: A-110

07 NOT USED
SCALE: 6" = 1'-0"

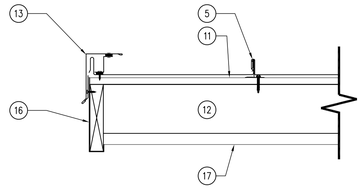

06 DETAIL – GABLE RAKE
SCALE: 1 1/2" = 1'-0"

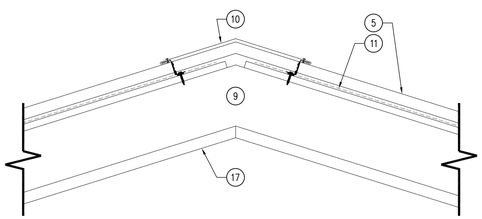

05 DETAIL – ROOF RIDGE
SCALE: 1 1/2" = 1'-0"

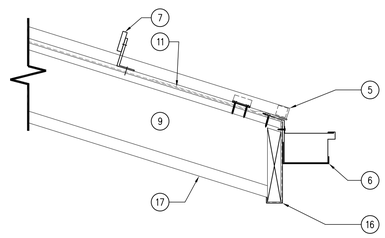

04 DETAIL – ROOF EAVE
SCALE: 1 1/2" = 1'-0"

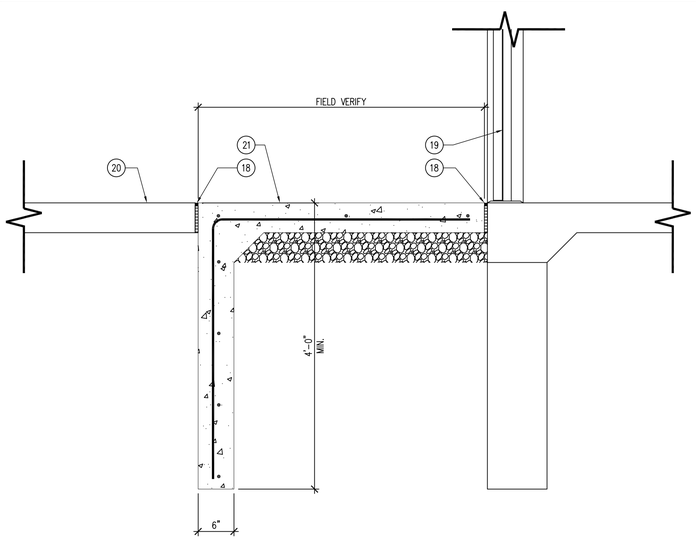

03 DETAIL – STOOP FOOTING
SCALE: 1" = 1'-0"

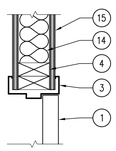

02 DOOR DETAIL – JAMB
SCALE: 3" = 1'-0"

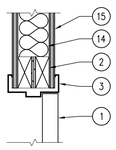

01 DOOR DETAIL – THRESHOLD
SCALE: 3" = 1'-0"

DOOR TYPES

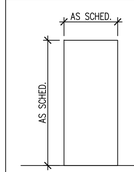

D-1
SOLID WOOD DOOR
PREMIUM "A" GRADE
MAPLE VENEER

FRAME TYPES

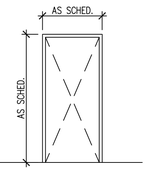

F-1
STEELCRAFT "F" SERIES
HOLLOW METAL

ROOM SCHEDULE

ROOM #	ROOM NAME	FLOORING	BASE	NORTH WALL FINISH	EAST WALL FINISH	SOUTH WALL FINISH	WEST WALL FINISH	CEILING	NOTES
101	RECEPTION	–	–	–	–	–	–	ACT-1	–
102	CORRIDOR	–	–	–	–	–	–	ACT-1	–
105	BREAK	–	RB-1	PNT-1	–	–	–	–	–
106	RESTROOM	CONC-1	RB-1	PNT-1	PNT-1	PNT-1	PNT-1	GYP-1	REWALL ESSENTIAL WALL BOARD
107	RESTROOM	CONC-1	RB-1	PNT-1	PNT-1	PNT-1	PNT-1	GYP-1	REWALL ESSENTIAL WALL BOARD
110	CONFERENCE	–	–	–	–	–	–	ACT-1	–
120	RESTROOM	CONC-1	–	PNT-1	–	–	–	–	–
126	MECHANICAL	CONC-1	–	–	–	–	–	–	–

HARDWARE SCHEDULE

1. ALL HARDWARE MODEL NUMBERS BASED ON SCHLAGE "ND-SERIES" LOCKSETS AND "IVES" HARDWARE.
2. HARDWARE FINISH TO BE : "SATIN NICKEL"
3. WOOD DOORS TO BE CUSTOM GRADE "A" MAPLE WOOD VENEER SOLID CORE. FINISH TO BE APPROVED. UNDERCUT WOOD DOORS 1" ABOVE FLOOR.

HARDWARE SET NO. 1 – DOORS: 106 & 107

3 EA.	HINGES	FBB179 4 1/2 X 4 1/2
1 EA.	PRIVACY	ND40S (ATHENS)
1 EA.	FLOOR STOP	WS443 US15
3 EA.	SILENCERS	SR66 (BLACK)
1 EA.	CLOSER	LCN 4010

KEYNOTES

1. DOOR AS SCHEDULED.
2. WOOD STUD HEADER.
3. DOOR FRAME AS SCHEDULED.
4. DOUBLE STUD DOOR JAMB FRAMING.
5. FIRESTONE UC-14 24GA METAL ROOF.
6. 6" SEAMLESS METAL GUTTER AND DOWNSPOUT SYSTEM WITH SHUR-FLO GUTTER GUARDS. COLOR TO BE DARK BRONZE.
7. S-5! COLORGARD SNOW GUARD BARS.
8. BLOCKING AS REQUIRED.
9. EXISTING RAFTER BEAM TO REMAIN.
10. FIRESTONE ROOF RIDGE CAP.
11. GRACE, SELF-ADHERED, WATER AND ICE SHIELD OVER EXISTING ROOF DECK.
12. EXISTING OUTRIGGER TO REMAIN.
13. METAL RAKE EDGE FLASHING BY ROOFING MANUFACTURER.
14. 4" SOUND BATT INSULATION.
15. ½" REWALL ESSENTIAL BOARD.
16. WRAP EXISTING 2X FASCIA WITH BREAK METAL, MATCH ROOF COLOR.
17. EXISTING SOFFIT WOOD TO REMAIN.
18. ½" EXPANSION MATERIAL WITH SELF-LEVELING POLYURETHANE CAULK.
19. EXISTING DOOR TO REMAIN.
20. EXISTING CONCRETE SIDEWALK TO REMAIN.
21. STOOP FOOTING, 6" CONCRETE SLAB OVER 6" SUBBASE, TURN SLAB DOWN TO 6" FOOTING 4'-0" DEEP, WITH #4 REBAR 24" O.C. ALL DIRECTIONS.

FINISH SCHEDULE

FINISH MARK	MATERIAL	MANUFACTURER INFO: COMPANY NAME	MANUFACTURER INFO: PRODUCT NUMBER	DIMENSION	COLOR	FINISH	COMMENTS
FLOOR FINISH							
CONC-1	SEALED CONCRETE	–	–	–	–	–	–
EXTERIOR FINISH							
SR-1	SNAP LOCK METAL ROOF	FIRESTONE	UC-14	24 GAUGE	DARK BRONZE	KYNAR 500	–
CEILING FINISH							
GYP-1	GYPSUM CEILING BOARD	USG	–	5/8"	WHITE	SMOOTH	1 COAT PRIMER, 2 COATS PAINT
ACT-1	ACOUSTIC CEILING TILE	ARMSTRONG	1904	24X48	WHITE	MANUF.	REUSE EXISTING CEILING GRID
INTERIOR FINISH							
RW-1	ESSENTIAL BOARD	REWALL	–	1/2"	PNT-1	SMOOTH	1 COAT PRIMER, 2 COATS PAINT
RB-1	RUBBER BASE	JOHNSONITE	–	4"	63 BURNT UMBER	MANUF.	–
WD-1	WOOD VENEER PLYWOOD	–	–	3/4"	HARD MAPLE	CLEAR POLY	EXTERIOR OF ALL CABINETRY
PL-1	PLASTIC LAMINATE	–	–	VARIES	BLACK LAMINATE	MANUF.	INTERIOR OF ALL CABINETRY
SS-1	SOLID SURFACE	CORIAN	–	1 1/2"	LAVA ROCK	MANUF.	–
PNT-1	LATEX PAINT	SHERWIN WILLIAMS	DURATION	–	TBD	SATIN	–

DOOR SCHEDULE

DOOR NUMBER	DOOR: DIMENSION WIDTH	DOOR: DIMENSION HEIGHT	DOOR: DIMENSION THICK.	DOOR: TYPE	DOOR: GLASS	DOOR: FINISH	FRAME: DETAILS HEAD	FRAME: DETAILS JAMB	FRAME: DETAILS THRESHOLD	FRAME: TYPE	FRAME: FINISH	FIRE RATING LABEL	HARDWARE SET #	HARDWARE KEYSIDE ROOM NUMBER	COMMENTS
105	EXIST.	EXIST.	–	–	–	EXIST.	01/A-600	02/A-600	–	F-1	PAINT		EXIST.	NA	RELOCATE EXISTING 105 DOOR
106	3'-0"	7'-0"	1 3/4"	D-1	–	CLEAR POLY	01/A-600	02/A-600	–	F-1	PAINT		1	NA	–
107	3'-0"	7'-0"	1 3/4"	D-1	–	CLEAR POLY	01/A-600	02/A-600	–	F-1	PAINT		1	NA	–

CONSULTANT:

IOWA DEPARTMENT OF NATURAL RESOURCES
ENGINEERING SERVICES - WALLACE BUILING
502 E. 9TH ST., DES MOINES, IA 50319-0034
P: 515.725.8200
F: 515.725.8202

FINISH, DOOR & WINDOW SCHEDULES

RESTROOM RENOVATION FOR:
STATE FOREST NURSERY

24040 SOUTH DUFF AVENUE
AMES, IA 50010

NO.	BY / DATE	REVISION

DRAWN BY:
PROJECT NUMBER: 19-02-85-01
CHK'D BY:
DATE: 05.30.2018
SHEET No: **A-600**