HICKORY GROVE LAKE
LOW WATER DRAIN PIPE AND VALVE
STORY COUNTY, IOWA
16-02-85-03

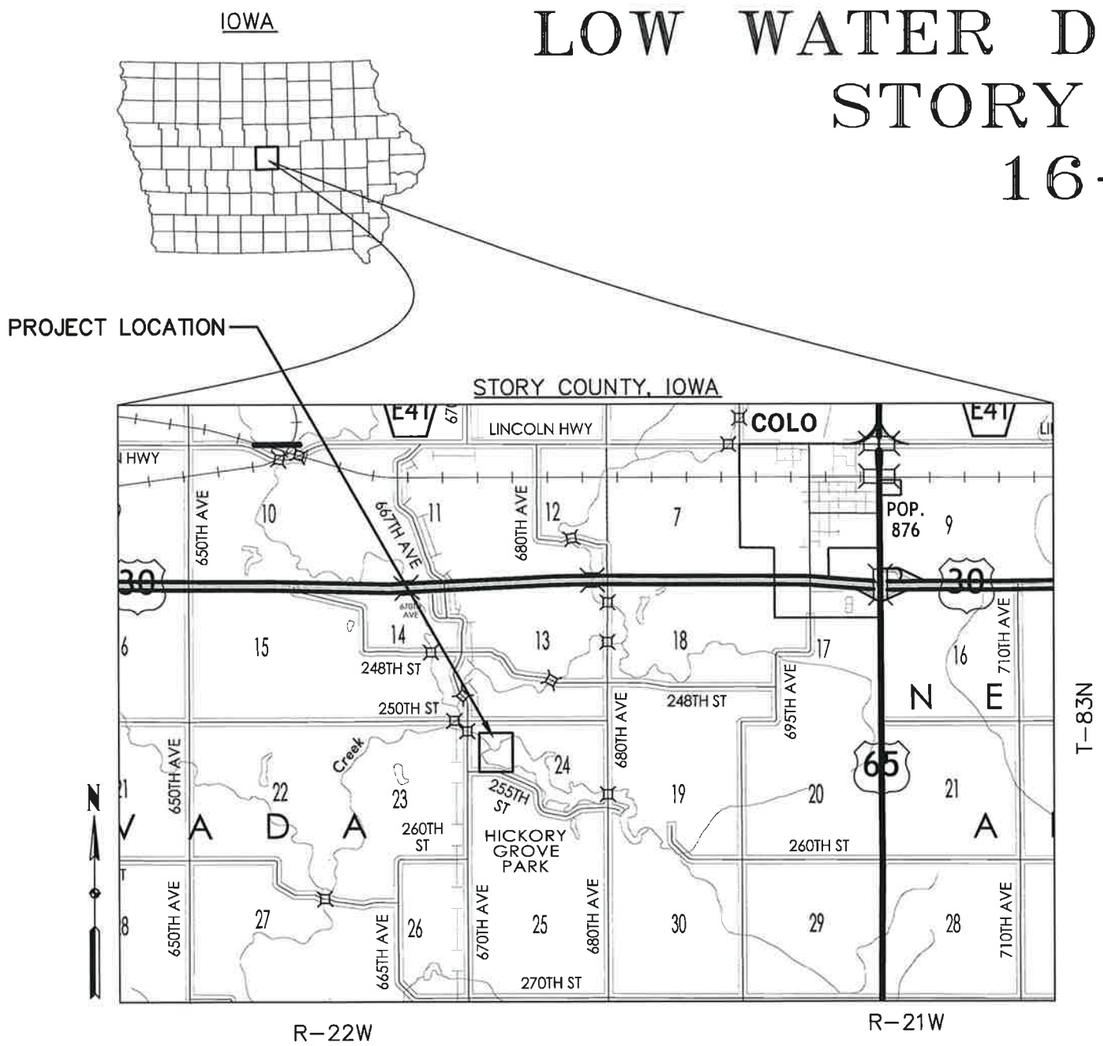

SHEET INDEX	
SHEET	DESCRIPTION
A-1	TITLE SHEET
A-2	PROJECT INFORMATION AND QUANTITIES
R-1	DRAWDOWN PUMPING INFORMATION
C-1	PROJECT OVERVIEW
C-2	DRAWDOWN PIPE PLAN & PROFILE
C-3	OUTLET AREA PLAN
S-1	VALVE AND RISER DETAILS
S-2	IMPACT BASIN DETAILS
S-3	IMPACT BASIN DETAILS
S-4	IMPACT BASIN DETAILS
P-1	POLLUTION PREVENTION PLAN
P-1	EROSION AND SEDIMENT CONTROL PLAN

GENERAL NOTES

WHERE PUBLIC UTILITY FIXTURES ARE SHOWN AS EXISTING ON THE PLANS OR ENCOUNTERED WITHIN THE CONSTRUCTION AREA, IT SHALL BE THE RESPONSIBILITY OF THE CONTRACTOR TO NOTIFY THE OWNER OF THESE UTILITIES BY CALLING IOWA ONE CALL (1-800-292-8989) AT LEAST 48 HOURS PRIOR TO THE BEGINNING OF ANY CONSTRUCTION. THE CONTRACTOR SHALL AFFORD ACCESS TO THESE FACILITIES FOR NECESSARY MODIFICATION OF SERVICES. UNDERGROUND FACILITIES, STRUCTURES AND UTILITIES HAVE BEEN PLOTTED FROM AVAILABLE RECORDS AND SURVEYS, AND THEREFORE THEIR LOCATIONS MUST BE CONSIDERED APPROXIMATE ONLY. IT IS THE CONTRACTOR'S RESPONSIBILITY TO DETERMINE THEIR EXISTENCE AND EXACT LOCATION AND TO AVOID DAMAGE THERETO. NO CLAIMS FOR ADDITIONAL COMPENSATION WILL BE ALLOWED TO THE CONTRACTOR FOR ANY INTERFERENCE OR DELAY CAUSED BY SUCH WORK.

IOWA ONE CALL
1-800-292-8989
www.iowaonecall.com

AUTHORIZATION TO BID

AUTHORIZATION-LAKE RESTORATION PROGRAM DATE

LAND AND WATERS BUREAU CHIEF DATE

LICENSED PROFESSIONAL ENGINEER JUSTIN M. ZIMMERMAN 19926 IOWA

I hereby certify that this engineering document was prepared by me or under my direct personal supervision and that I am a duly licensed Professional Engineer under the laws of the State of Iowa.
Justin M. Zimmerman, P.E. 4/26/18 Date
License Number 19926
My license renewal date is December 31, 2019
Pages or sheets covered by this seal:
S-2, S-3, S-4

LICENSED PROFESSIONAL ENGINEER NATHAN W. ANDERSON 18920 IOWA

I hereby certify that this engineering document was prepared by me or under my direct personal supervision and that I am a duly licensed Professional Engineer under the laws of the State of Iowa.
Nathan W. Anderson 4/26/18
License Number 18920
My license renewal date is December 31, 2019
Pages or sheets covered by this seal:
A-1, A-2, R-1, C-1, C-2, C-3, S-1, P-1, P-2

whks engineers + planners + land surveyors

BRAUN INTERTEC

REVISIONS			
NO.	DATE	DESCRIPTION	
1			

TITLE SHEET
HICKORY GROVE LAKE
LOW WATER DRAIN
PIPE AND VALVE
STORY COUNTY, IOWA

SCALE: AS SHOWN
PROJECT NO. 8503
DRAWN BY: NWA
CHECKED BY:
SHEET A-1

PROJECT NOTES & REFERENCE SPECIFICATIONS

1. Mobilization
   A. Mobilization shall be according to IDOT 2533.
   B. Measurement and payment for Mobilization shall be on a lump sum basis

2. Clearing and Grubbing
   A. Clearing and Grubbing shall be according to IDOT 2101 except as supplemented in this section.
   B. Measurement and payment for Clearing and Grubbing shall be on a lump sum basis.

3. Dewatering
   A. Dewatering shall be according to Section 31 23 19 of this specification.
   B. Measurement and payment for Dewatering shall be on a lump sum basis.

4. Construction Site Access
   A. This bid item is for the construction of temporary access routes to the work site(s). The contractor shall determine what provisions are necessary to properly access the site for his or her equipment.
   B. Materials used for the construction of Site Access may be left in place if they consist of natural material comprised of wood, rock, sand, or gravel. Temporary matting and other fabricated material must be removed upon project completion.
   C. This pay item will not be measured. Payment for Construction Site Access shall be on a lump sum basis.

5. Excavation
   A. Excavation shall be according to IDOT 2104 except as supplemented in this section.
   B. All excavation will be measured as Class 10 excavation.
   C. Stripping, salvaging and placement of topsoil shall be incidental to excavation.
   D. Measurement and payment for Excavation shall be on a lump sum basis.

6. HDPE Pipe, Trenchless Construction
   A. HDPE Pipe shall be according to Section 33 05 23 of this specification.
   B. Measurement and payment for HDPE Pipe shall be on installed linear foot basis, and shall include grouting.

7. Ductile Iron Pipe
   A. Ductile Iron Pipe shall be according to IDOT 2554 and IDOT 4150 except as supplemented in this section.
   B. Ductile Iron Pipe shall be Class 53.
   C. All joints shall be fully restrained.
   D. Tracer wire and disinfection are not required.
   E. Measurement and payment for Ductile Iron Pipe shall be per installed linear foot.

8. Fittings
   A. Fittings shall be according to IDOT 2554 and IDOT 4150 except as supplemented in this section.
   B. Measurement and payment for Fittings shall be on a per unit basis as listed in the proposal.

9. Gate Valve
   A. Gate Valves shall be according to IDOT 2554 and IDOT 4150 except as supplemented in this section.
   B. An extension stem shall be provided by the manufacturer of the position indicator. The extension stem shall connect to a 2" square nut on the valve and extend up through the position indicator, terminating in a 2" square nut, operable by a standard waterworks tee-handle wrench. The position of the valve, from fully open to fully closed, shall be easily identified at ground level. The movement of the indicating arrow shall be visible through a window covering a minimum of 300 degrees of the circumference of the indicator. The scale plate shall be clear polycarbonate with characters and numerals that are a minimum of 3/16" to facilitate identification by the operator. The position indicator shall be of the planetary gear design. The sun gear, planet gear and ring gears will be constructed of non-corrosive Delrin. All Delrin components shall be white in color, to enhance visibility in the cast iron valve box or adapter. The scale plate will be clear polycarbonate. Housings of carbon steel or aluminum will not be accepted. Fasteners shall be stainless steel. The top scale plate shall have markings representing the number of turns, contain the word "Closed", and a directional arrow. The markings shall be permanently recessed, embossed or engraved in the scale plate. The use of adhesive labels is not acceptable. The "open" line shall be marked on a transparent polycarbonate window, which will be field adjusted to the exact number of turns of each valve. After calibration, the position of the adjustable "open" window shall be secured to the top surface of the scale plate by the outside diameter of three stainless button head cap screws. Position indicators that are factory calibrated without the valve, rather than calibrated to the valve they are used with, are not acceptable. The position indicator shall be sealed with (2) Neoprene O-rings.
   C. This pay item shall include the valve, gear box, extension stem, turn position indicator, support stands, and other miscellaneous parts and fittings needed to construct the valve.
   D. Measurement and payment for Gave Valve shall be on a per unit basis as listed in the proposal.

10. Riser Inlet Structure
    A. Riser Inlet Structure shall be according to IDOT 2435 except as supplemented in this section.
    B. Measurement and payment for Riser Inlet Structure shall be on lump sum basis.

11. Valve Vault
    A. Valve Vault shall be according to IDOT 2435 except as supplemented in this section.
    B. Measurement and payment for Valve Vault shall be on lump sum basis.

12. Impact Basin
    A. Impact Basin shall be according to IDOT 2406 except as supplemented in this section.
    B. Impact basin may be either cast-in-place or precast.
    C. Measurement and payment for Impact Basin shall be on lump sum basis.

13. Subdrain - 8" CMP
    A. Subdrain shall be according to IDOT 2502 except as supplemented in this section.
    B. Subdrain material shall be CMP according to IDOT 4141.
    C. Fittings and outlet rat guard shall be incidental.
    D. Measurement and payment for Subdrain shall be per installed liner foot basis.

14. Filter Diaphragm
    A. Filter Diaphragm shall be according to IDOT 2104 except as supplemented in this section.
    B. Filter Diaphragm shall be constructed of ASTM C33 fine aggregate (sand).
    C. Diaphragm shall be constructed in 8-inch lifts maximum.
    D. Filter material shall be thoroughly flooded and compacted during placement.
    E. Payment shall include sand and underdrain aggregate.
    F. Measurement and payment for Filter Diaphragm shall be on a lump sum basis.

15. Revetment Class D
    A. Revetment shall be according to IDOT 2507 except as supplemented in this section.
    B. Measurement and payment for Revetment shall be per ton. Contractor shall provide weight tickets.

16. Fertilizing, Seeding and Mulching
    A. Fertilizing, Seeding, and Mulching shall be according to IDOT 2601 except as supplemented in this section.
    B. All seed shall be hydraulically placed with wood cellulose fiber mulch
    C. Measurement and payment for Fertilizing, Seeding and Mulching shall be on a per square yard basis.

17. Erosion Control Matting
    A. Erosion Control Matting shall be according to IDOT 2601 except as supplemented in this section.
    B. Matting shall be wood excelsior mat.
    C. Measurement and payment for Erosion Control Matting shall be on an installed square yard basis, and shall not include overlap.

18. Silt Fence
    A. Silt Fence shall be according to IDOT 2602 except as supplemented in this section.
    B. Measurement and payment for Silt Fence shall be on a per installed liner foot basis. Measurement and pay shall also include removal of silt fence.

19. Floating Silt Curtain
    A. Floating Silt Curtain shall be according to IDOT 2602 except as supplemented in this section.
    B. Floating silt curtain shall become the property of the owner and left in place upon completion.
    C. Measurement and payment for Floating Silt Curtain shall be on a per installed liner foot basis.

ESTIMATED QUANTITIES OF WORK

Item	Item Description	Quantity	Unit
1	Mobilization	1	LS
2	Clearing and Grubbing	1	LS
3	Dewatering	1	LS
4	Construct Site Access	1	LS
5	Excavation	1	LS
6	HDPE Pipe - 24", DR11 - Trenchless Construction	1130	LF
7	Ductile Iron Pipe - 24" Class 53	40	LF
8	Bend Fitting - 24" 22.5 Degree MJ	1	EA
9	Transition Fitting - 24" HDPE-DIP	1	EA
10	Gate Valve - 24"	1	EA
11	Rister Inlet Structure	1	LS
12	Valve Vault	1	LS
13	Impact Basin	1	LS
14	Subdrain - 8" CMP	110	LF
15	Filter Diaphragm	1	LS
16	Revetment Stone, Class D	200	TON
17	Fertilizing Seed Mulching	1000	SY
18	Erosion Control Matting	275	SY
19	Silte Fence	250	LF
20	Floating Silt Curtain	100	LF

PROJECT SEQUENCING

1. STORY COUNTY WILL LOWER THE RESERVOIR TO ELEVATION 961.0 USING EXISTING OUTLET.
2. CONTRACTOR SHALL PUMP RESERVOIR EMPTY TO ALLOW ACCESS. A MAXIMUM OF 1 FOOT PER DAY DRAWDOWN WILL BE ALLOWED PER IDNR DAM SAFETY REQUIREMENTS.
3. CONSTRUCTION OF THE DRAWDOWN PIPE SHALL BEGIN ONCE THE RESERVOIR IS ADEQUATELY DRAINED.
4. CONTRACTOR SHALL MAINTAIN A MAXIMUM POOL ELEVATION OF 950.0 BEGINNING NO LATER THAN 1 NOVEMBER 2018. IT IS UNDERSTOOD BOUNCES FROM RAINFALL EVENTS WILL OCCUR, BUT IN GENERAL THE CONTRACTOR SHALL HAVE THE POOL LOWERED AND FUNCTIONAL PUMPING IN PLACE BY 1 NOVEMBER 2018.

REFERENCE FIGURES AND ROAD PLANS

THESE STANDARD SUDAS FIGURES SHALL BE CONSIDERED APPLICABLE TO WORK ON THIS PROJECT

FIG. NO.	LATEST REVISION	TITLE	REMARK
3010.101	04-21-09	TRENCH BEDDING AND BACKFILL ZONES	(SW-101)
3010.104	04-21-09	PRESSURE PIPE TRENCH BEDDING	(SW-104), CLASS P-2
6010.302	04-21-09	RECTANGULAR SANITARY MANHOLE	(SW-302), MODIFIED
6010.402	04-21-09	RECTANGULAR STORM SEWER MANHOLE	(SW-402), MODIFIED
6010.601	04-21-15	CASTINGS FOR SANITARY SEWER MANHOLES	(SW-601), USE TYPE A
6010.604	10-20-09	CASTINGS FOR AREA INTAKES	(SW-604), USE TYPE 4C
9040.103	10-21-14	ROLLED EROSION CONTROL PRODUCT ON SLOPES	
9040.111	10-21-14	RIPRAP APRON FOR PIPE OUTLET	
9040.119	10-21-14	SILT FENCE	
9040.120	10-21-14	STABILIZED CONSTRUCTION ENTRANCE	
EC-202	10-18-11	FLOATING SILT FENCE	

whks engineers + planners + land surveyors

BRAUN INTERTEC

REVISIONS

NO.	DATE	DESCRIPTION
1		

PROJECT INFORMATION AND QUANTITIES
HICKORY GROVE LAKE
LOW WATER DRAIN PIPE AND VALVE
STORY COUNTY, IOWA

SCALE: AS SHOWN
PROJECT NO. 8503
DRAWN BY: NWA
CHECKED BY:
SHEET A-2

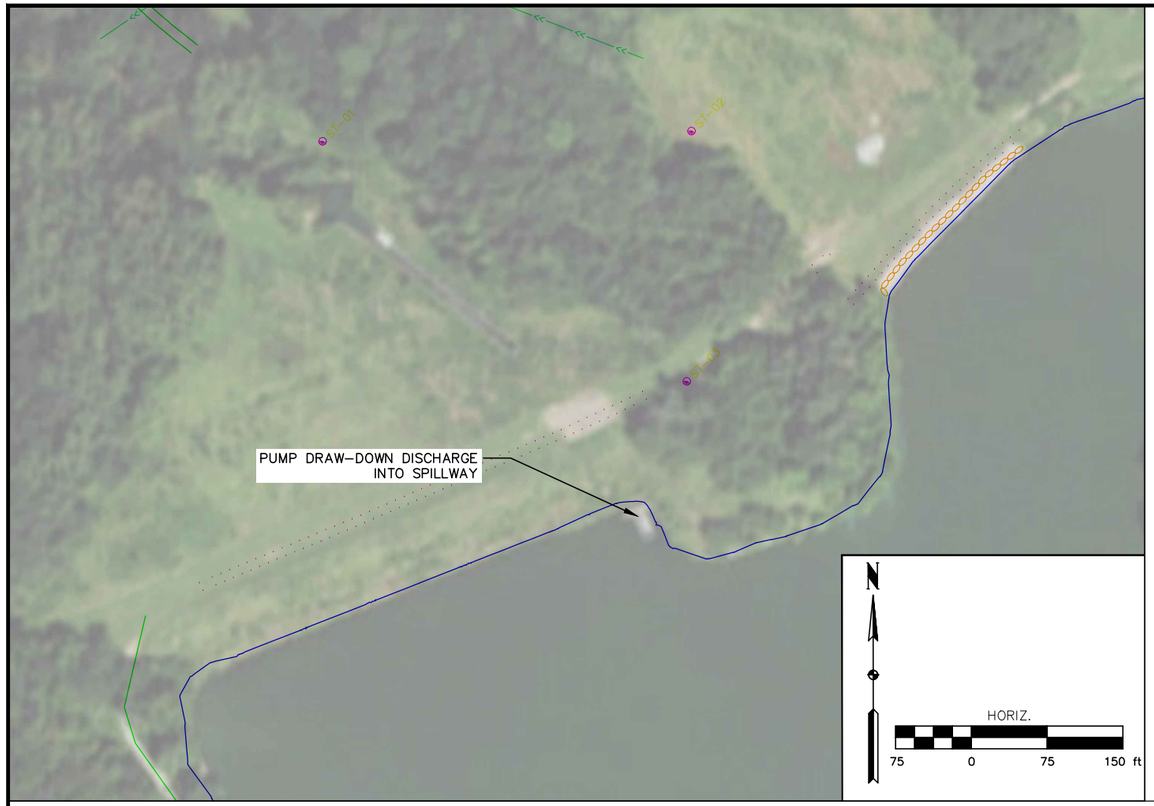

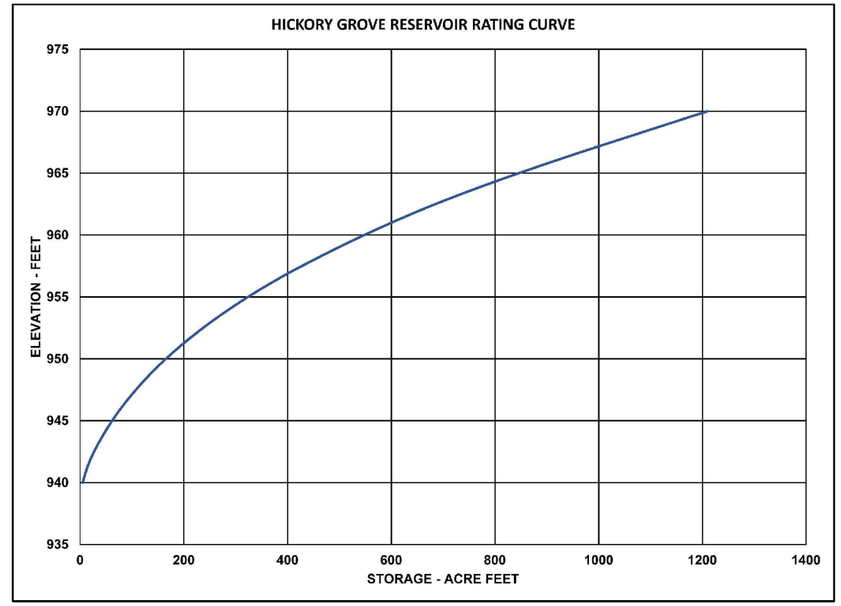

ELEVATION	STORAGE (ACRE_FEET)	STORAGE (CUBIC FEET)	IMCREMENTAL STORAGE (CUBIC FEET)	APPROXIMTE PUMPING RATE - 1 FT/DAY DRAWDOWN (CFS)*
970	*1209.8*	*52,699,933*		
969	*1134.9*	*49,438,291*	*3,261,642*	*37.8*
968	*1061.0*	*46,217,857*	*3,220,434*	*37.3*
967	*988.0*	*43,038,587*	*3,179,270*	*36.8*
966	*916.0*	*39,900,437*	*3,138,150*	*36.3*
965	*845.6*	*36,834,380*	*3,066,058*	*35.5*
964	*778.8*	*33,924,528*	*2,909,852*	*33.7*
963	*715.5*	*31,165,350*	*2,759,178*	*31.9*
962	*655.5*	*28,552,143*	*2,613,208*	*30.2*
961	*600.4*	*26,152,640*	*2,399,503*	*27.8*
960	548.0	23,871,316	2,281,324	26.4
959	498.1	21,696,191	2,175,125	25.2
958	450.4	19,620,034	2,076,157	24.0
957	404.9	17,639,317	1,980,717	22.9
956	362.9	15,808,360	1,830,957	21.2
955	323.7	14,101,809	1,706,550	19.8
954	287.1	12,505,161	1,596,648	18.5
953	253.1	11,026,691	1,478,470	17.1
952	221.8	9,659,561	1,367,131	15.8
951	192.5	8,383,863	1,275,698	14.8
950	165.2	7,194,195	1,189,667	13.8
949	140.5	6,121,966	1,072,229	12.4
948	118.1	5,143,695	978,270	11.3
947	97.5	4,246,752	896,944	10.4
946	78.5	3,420,157	826,595	9.6
945	61.8	2,691,006	729,151	8.4
944	46.7	2,034,993	656,014	7.6
943	33.1	1,441,095	593,897	6.9
942	21.2	921,860	519,235	6.0
941	12.0	524,179	397,681	4.6
940	5.1	221,707	302,472	3.5

*** NO BASE FLOW - SEE NOTES**

TABLE 1

PORTION OF RESERVOIR UNDER GATE CONTROL

DRAWDOWN NOTES

1. STORY COUNTY WILL LOWER THE RESERVOIR TO ELEVATION 961.0 USING EXISTING OUTLET GATE.
2. PUMPING RATES SHOWN IN TABLE 1 ARE APPROXIMATE AND DO NOT INCLUDE BASE FLOW INTO RESERVOIR. THE BASE FLOW RATE VARIES AND THE PUMPING RATE SHALL BE ADJUSTED TO ACCOUNT FOR BASE FLOW.
3. THE AVERAGE ANNUAL BASE FLOW INTO THE RESERVOIR IS 2–3 CFS.
4. RAINFALL EVENTS DURING CONSTRUCTION WILL RESULT IN THE RESERVOIR FILLING.
5. ADDITIONAL STAND–BY PUMPING CAPACITY OF AT LEAST 180 CFS (1–YEAR, 24–HOUR RAINFALL EVENT) SHALL BE PROVIDED DURING CONSTRUCTION.
6. CONTRACTOR ASSUMES RISK FOR ALL FLOW RATES INTO THE RESERVOIR AND MAY PROVIDE ADDITIONAL STAND–BY PUMPING CAPACITY. TABLE 2 IS PROVIDED FOR INFORMATIONAL PURPOSES ONLY AND MAY BE USED AS A GUIDE WHEN SELECTING THE APPROPRIATE LEVEL OF RISK.
7. SHOULD THE RESERVOIR RISE DUE TO INFLOW, A MAXIMUM 1 FOOT PER DRAWDOWN SHALL STILL BE REQUIRED TO DRAIN THE EXTRA WATER.

RETURN PERIOD	24-HOUR RAINFALL (INCHES)	ESTIMATED RUNOFF VOLUME (CUBIC FEET)	PEAK RUNOFF RATE (CFS)
1- YEAR	2.4	5,935,000	180
2-YEAR	2.9	9,885,000	317
5-YEAR	3.6	16,289,000	550
10-YEAR	4.3	22,495,000	780
25-YEAR	5.2	31,900,000	1,140
50-YEAR	5.8	38,780,000	1,400
100-YEAR	6.5	47,926,000	1,754

TABLE 2

whks engineers + planners + land surveyors

BRAUN INTERTEC

REVISIONS

NO.	DATE	DESCRIPTION
1		

DRAWDOWN PUMPING INFORMATION
HICKORY GROVE LAKE
LOW WATER DRAIN PIPE AND VALVE
STORY COUNTY, IOWA

SCALE: AS SHOWN
PROJECT NO. 8503
DRAWN BY: NWA
CHECKED BY:
SHEET R–1

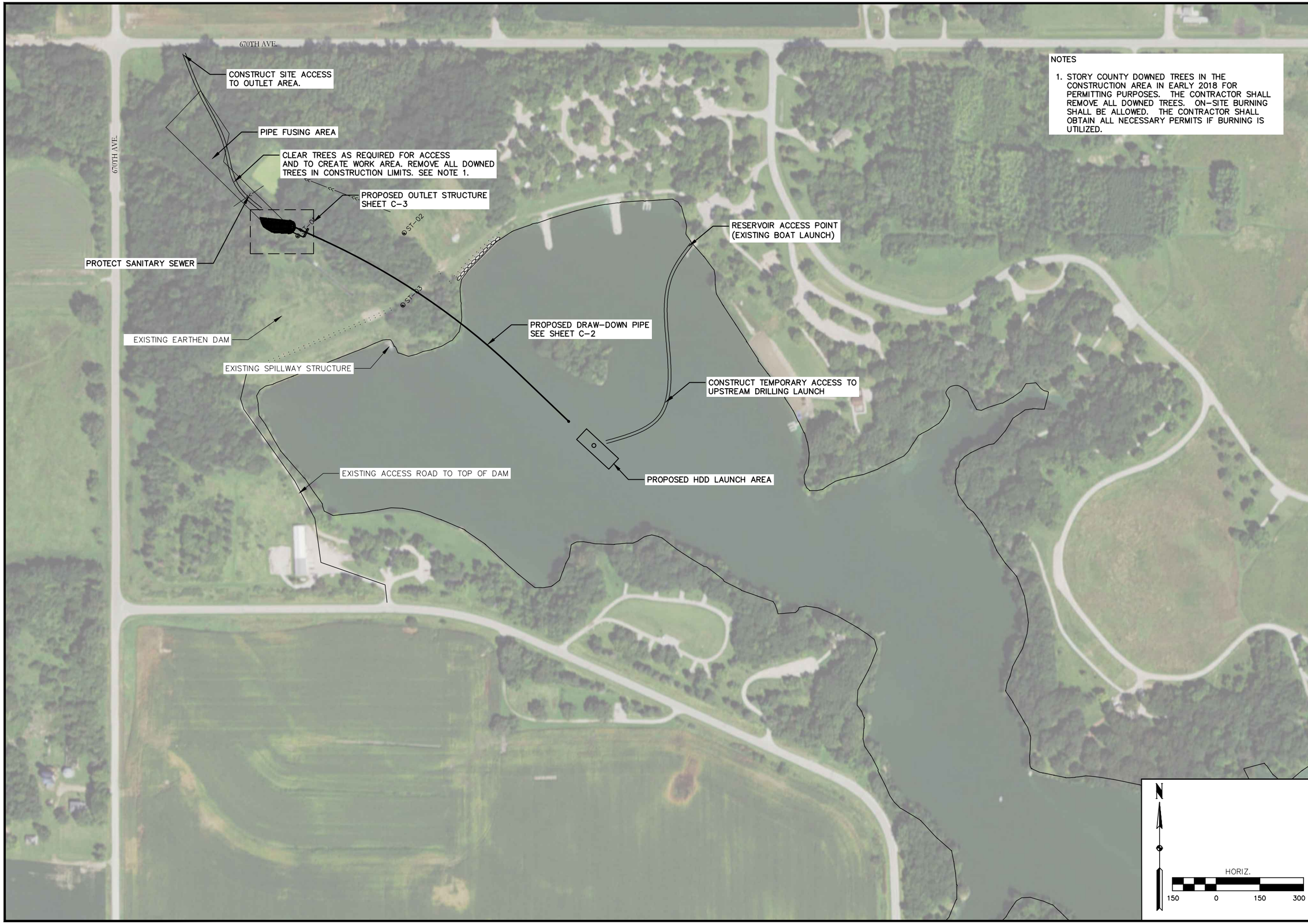

NOTES

1. STORY COUNTY DOWNED TREES IN THE CONSTRUCTION AREA IN EARLY 2018 FOR PERMITTING PURPOSES. THE CONTRACTOR SHALL REMOVE ALL DOWNED TREES. ON-SITE BURNING SHALL BE ALLOWED. THE CONTRACTOR SHALL OBTAIN ALL NECESSARY PERMITS IF BURNING IS UTILIZED.

whks engineers + planners + land surveyors

BRAUN INTERTEC

REVISIONS

NO.	DATE	DESCRIPTION
1		

PROJECT OVERVIEW SHEET
HICKORY GROVE LAKE
LOW WATER DRAIN PIPE AND VALVE
STORY COUNTY, IOWA

SCALE: AS SHOWN
PROJECT NO. 8503
DRAWN BY: NWA
CHECKED BY:
SHEET C-1

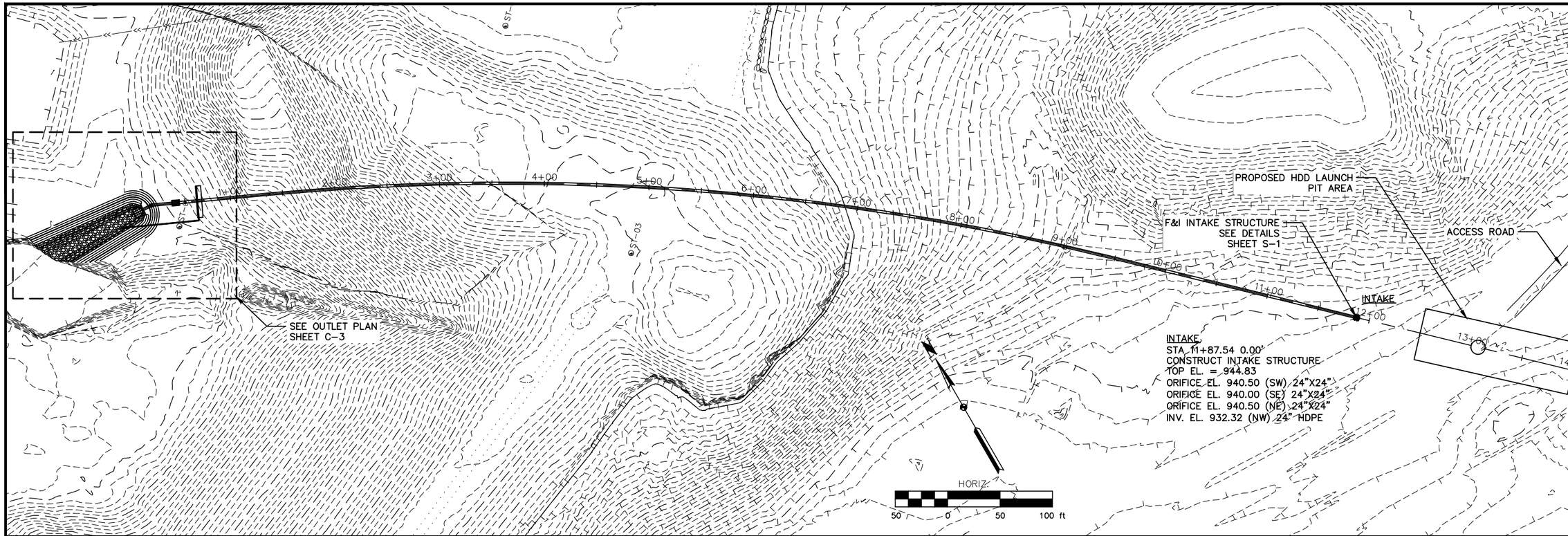

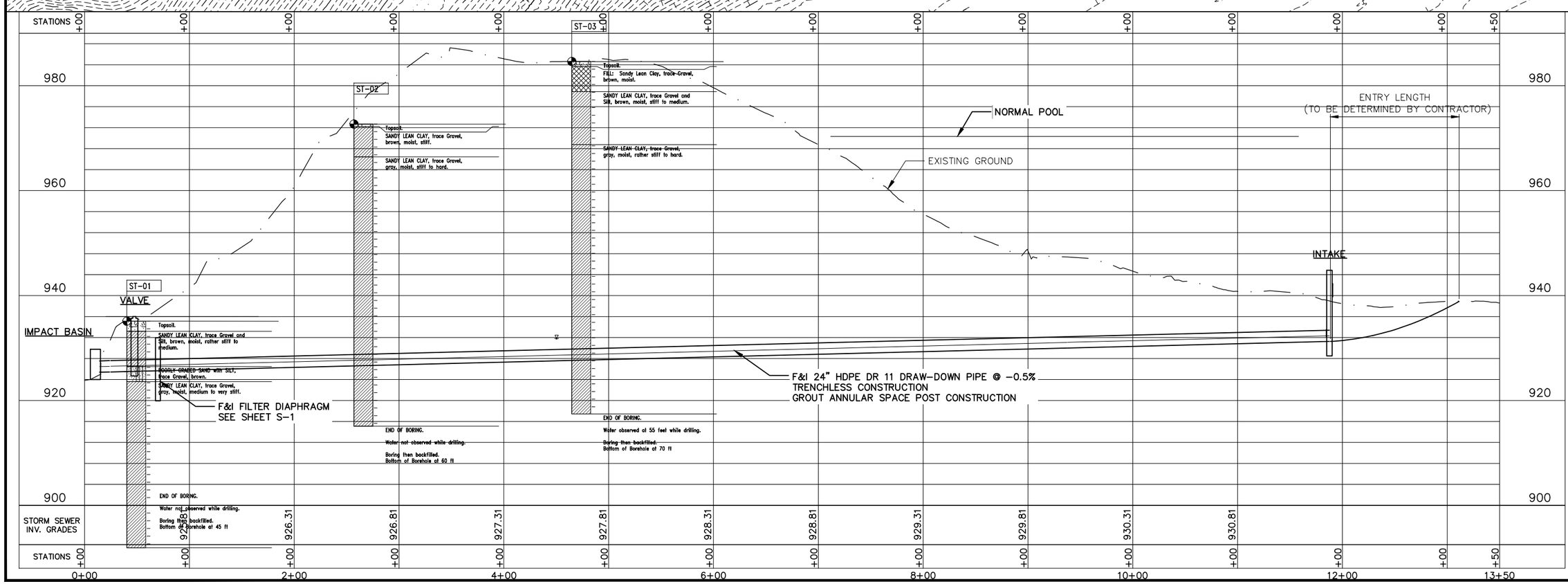

whks engineers + planners + land surveyors

BRAUN INTERTEC

REVISIONS		
NO.	DATE	DESCRIPTION
1		

DRAWDOWN PIPE PLAN AND PROFILE
HICKORY GROVE LAKE
LOW WATER DRAIN PIPE AND VALVE
STORY COUNTY, IOWA

SCALE: AS SHOWN

PROJECT NO. 8503

DRAWN BY: NWA

CHECKED BY:

SHEET C-2

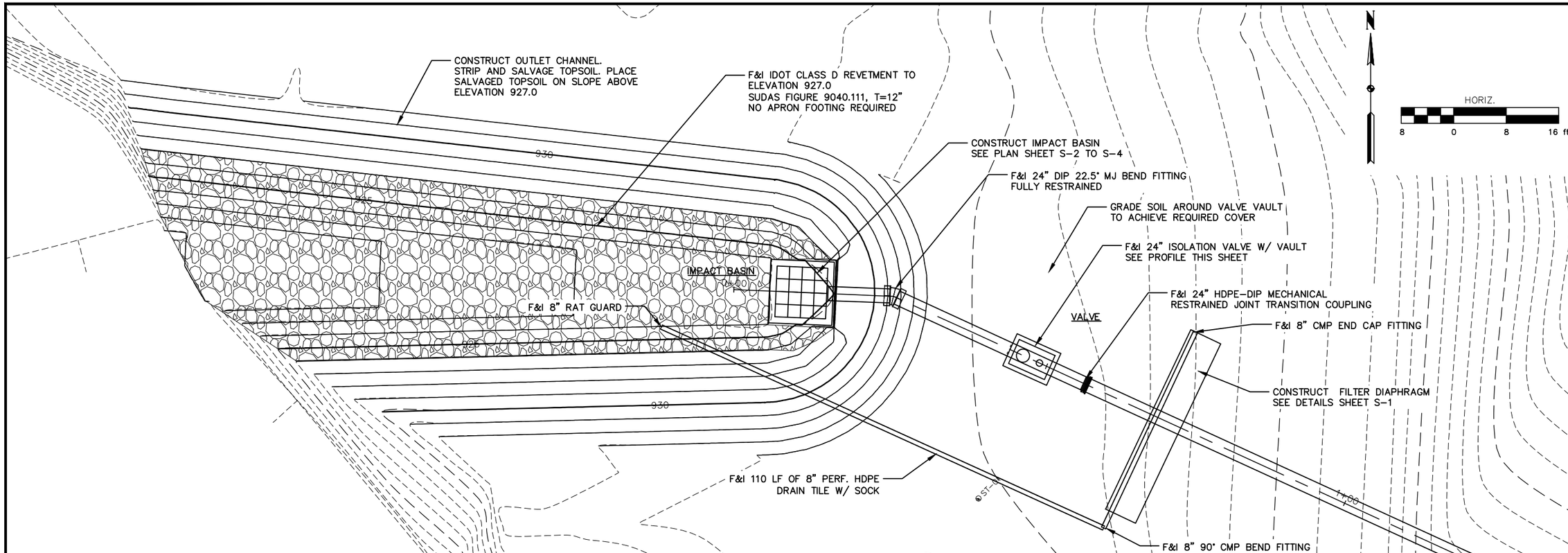

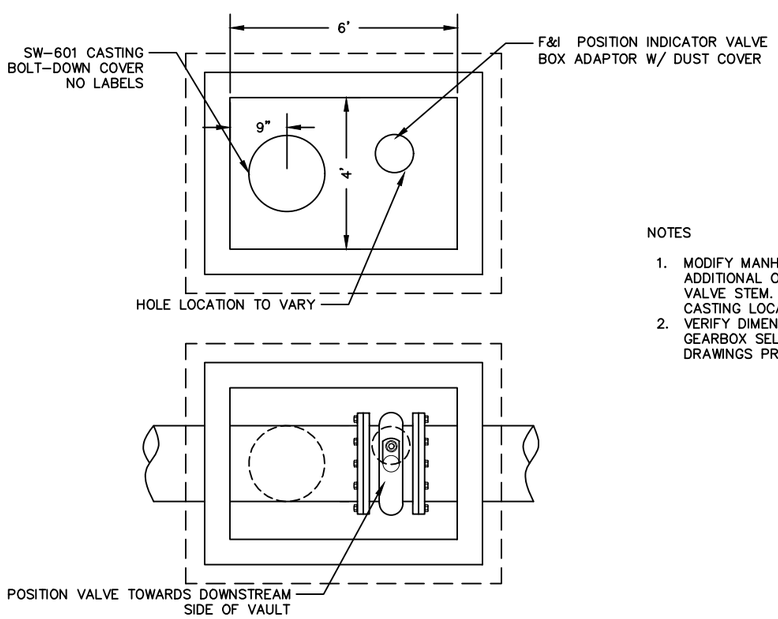

VALVE VAULT PLAN
NO SCALE

NOTES

1. MODIFY MANHOLE COVER TO CREATE ADDITIONAL OPENING CENTERED ON VALVE STEM. OFFSET MANHOLE CASTING LOCATION.
2. VERIFY DIMENSIONS WITH VALVE AND GEARBOX SELECTED. SUBMIT SHOP DRAWINGS PRIOR TO FABRICATION

NOTES

1. DIMENSIONS & ELEVATIONS SHOWN MAY VARY PER THE TOLERANCES LISTED FOR HDD PIPE. CONTRACTOR SHALL ADJUST AS REQUIRED BASED ON CONSTRUCTED ELEVATIONS.
2. MINIMUM COVER ON UPSTREAM SIDE OF PIPE SHALL BE 8'.

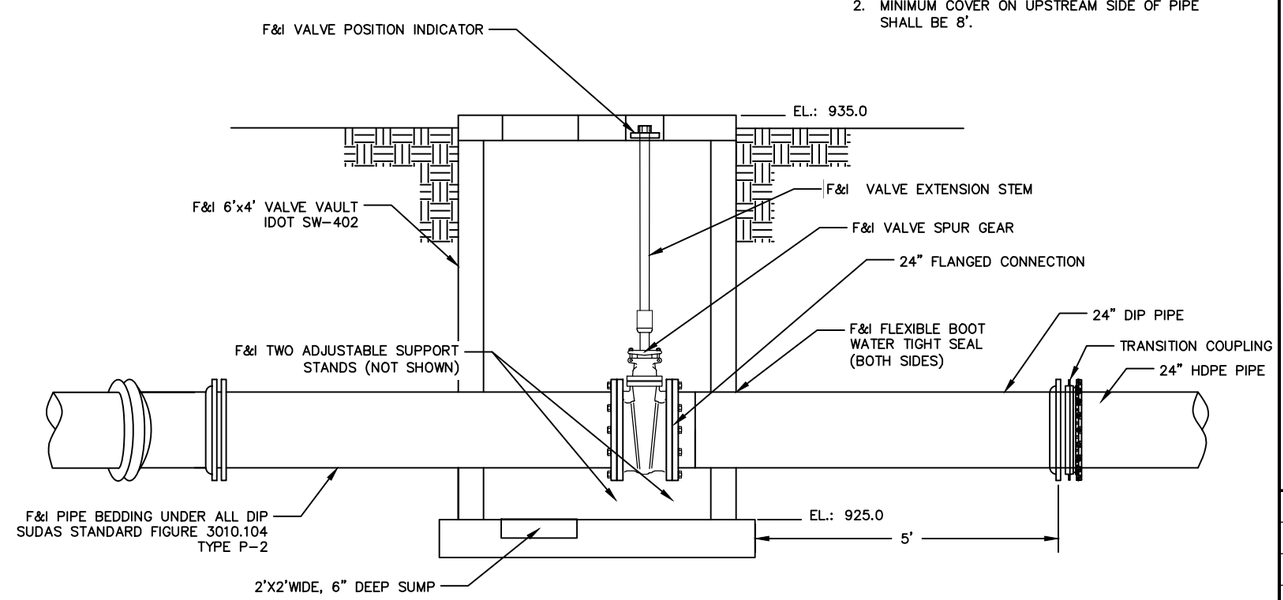

VALVE VAULT PROFILE
NO SCALE

whks
engineers + planners + land surveyors

BRAUN INTERTEC

REVISIONS

NO.	DATE	DESCRIPTION
1		

OUTLET AREA PLAN
HICKORY GROVE LAKE
LOW WATER DRAIN PIPE AND VALVE
STORY COUNTY, IOWA

SCALE: AS SHOWN
PROJECT NO. 8503
DRAWN BY: NWA
CHECKED BY:
SHEET C-3

NOTES

1. FILTER DIAPHRAGM SHALL BE CONSTRUCTED OF ASTM C33 SAND.
2. CONSTRUCT FILTER IN 8-INCH LIFTS MAXIMUM.

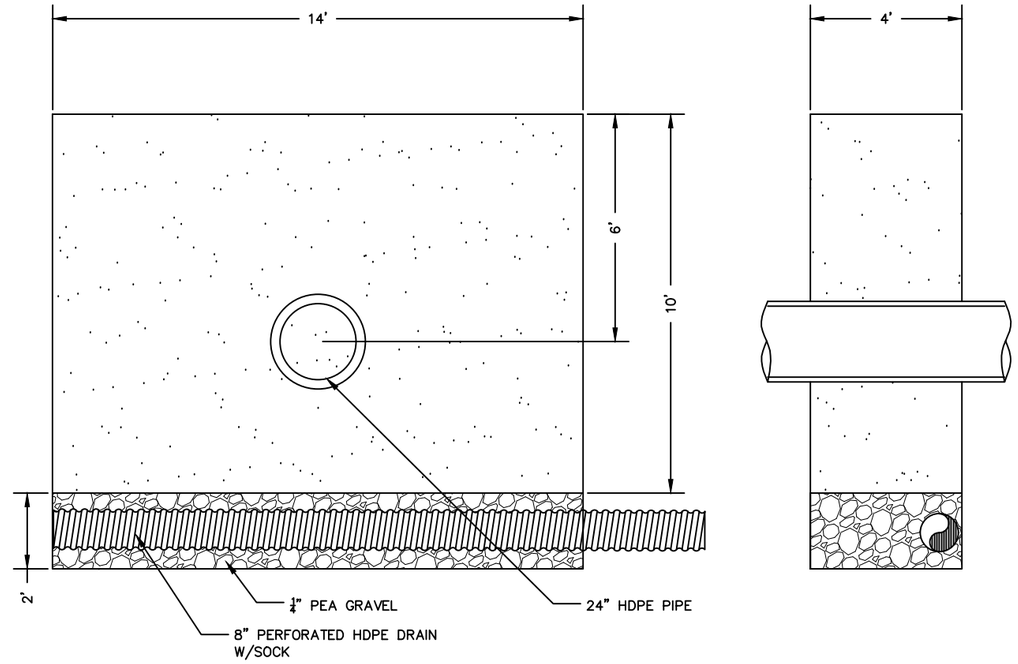

FILTER DIAPHRAGM DETAILS

NO SCALE

STRUCTURE SHALL BE ACCORDING TO SUDAS DETAIL 6010-302, WITH MODIFICATIONS AS SHOWN

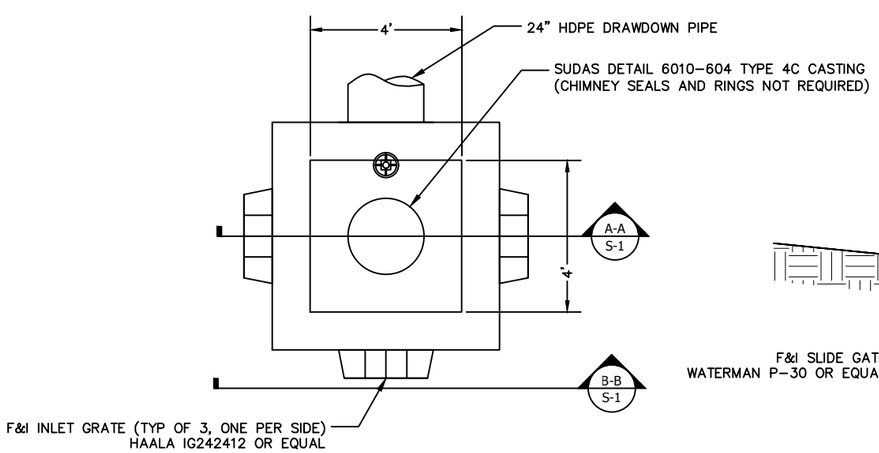

INLET STRUCTURE PLAN VIEW

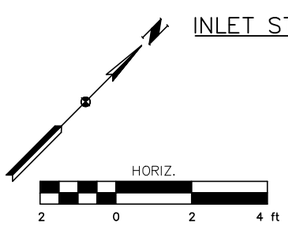

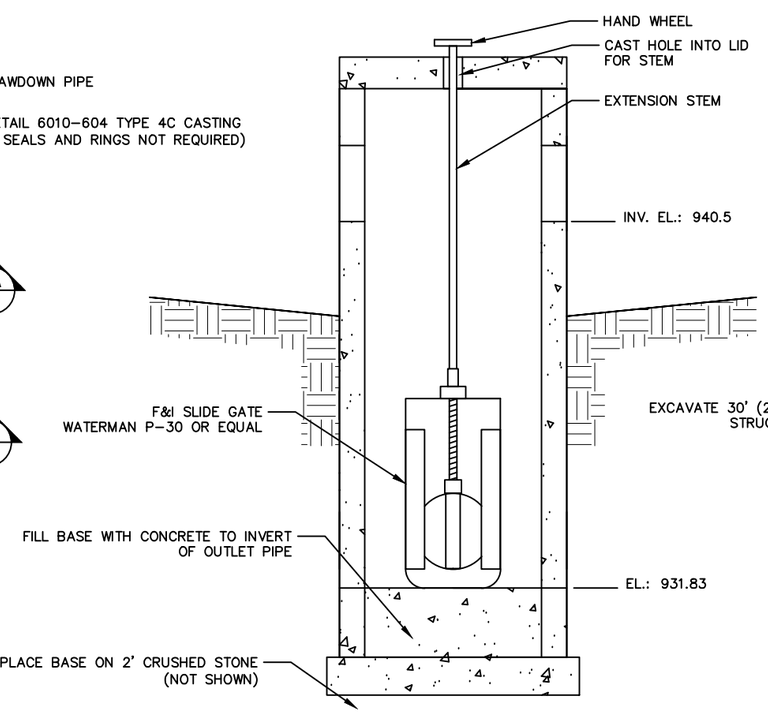

SECTION A-A

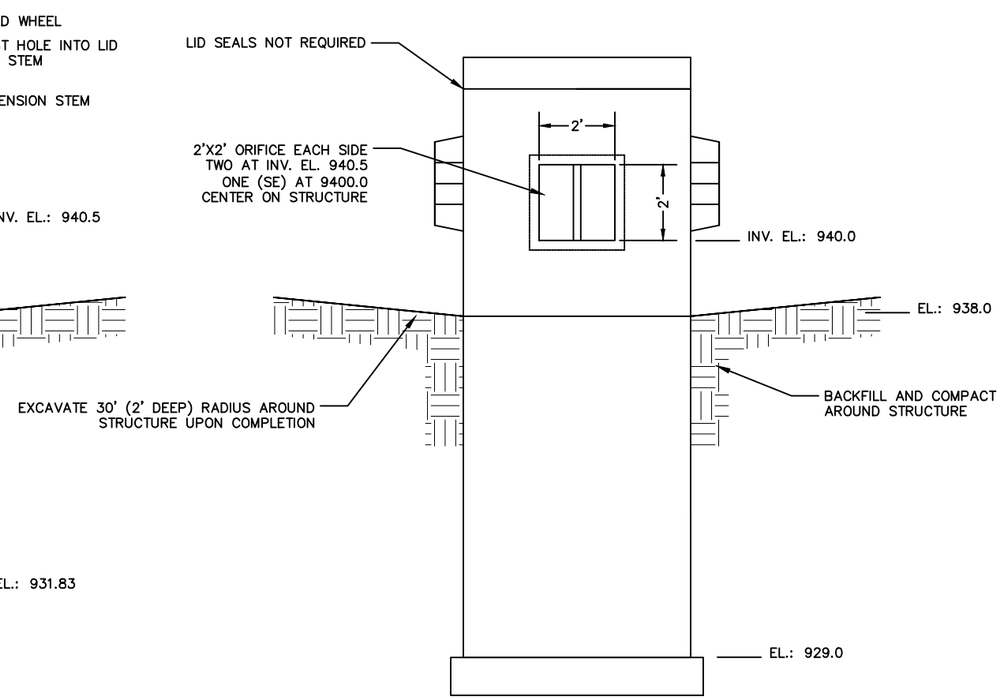

SECTION B-B

whks engineers + planners + land surveyors

BRAUN INTERTEC

REVISIONS

NO.	DATE	DESCRIPTION
1		

VALVE AND RISER DETAILS
HICKORY GROVE LAKE
LOW WATER DRAIN PIPE AND VALVE
STORY COUNTY, IOWA

SCALE: AS SHOWN
PROJECT NO. 8503
DRAWN BY: NWA
CHECKED BY:
SHEET S-1

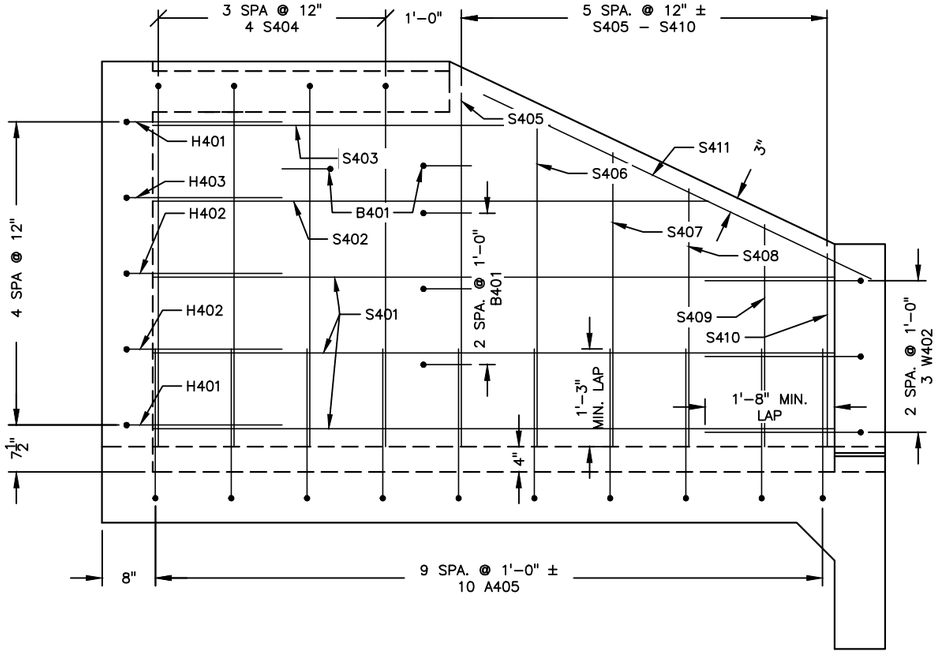

SIDEWALL ELEVATION

SCALE: ½" = 1'-0"

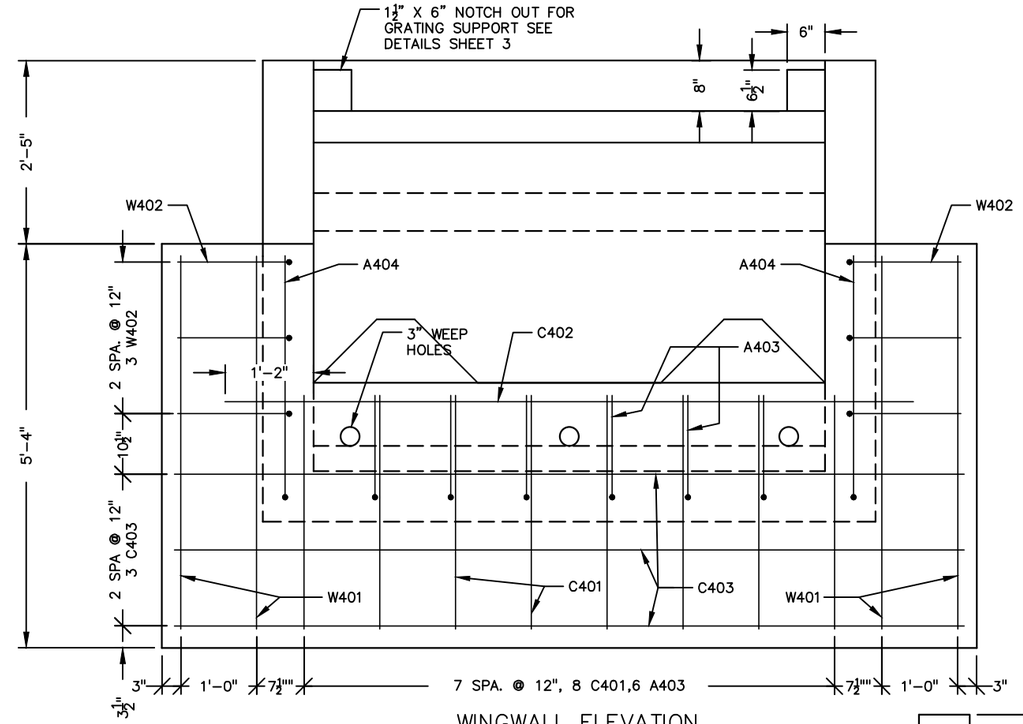

WINGWALL ELEVATION

SCALE: ½" = 1'-0"

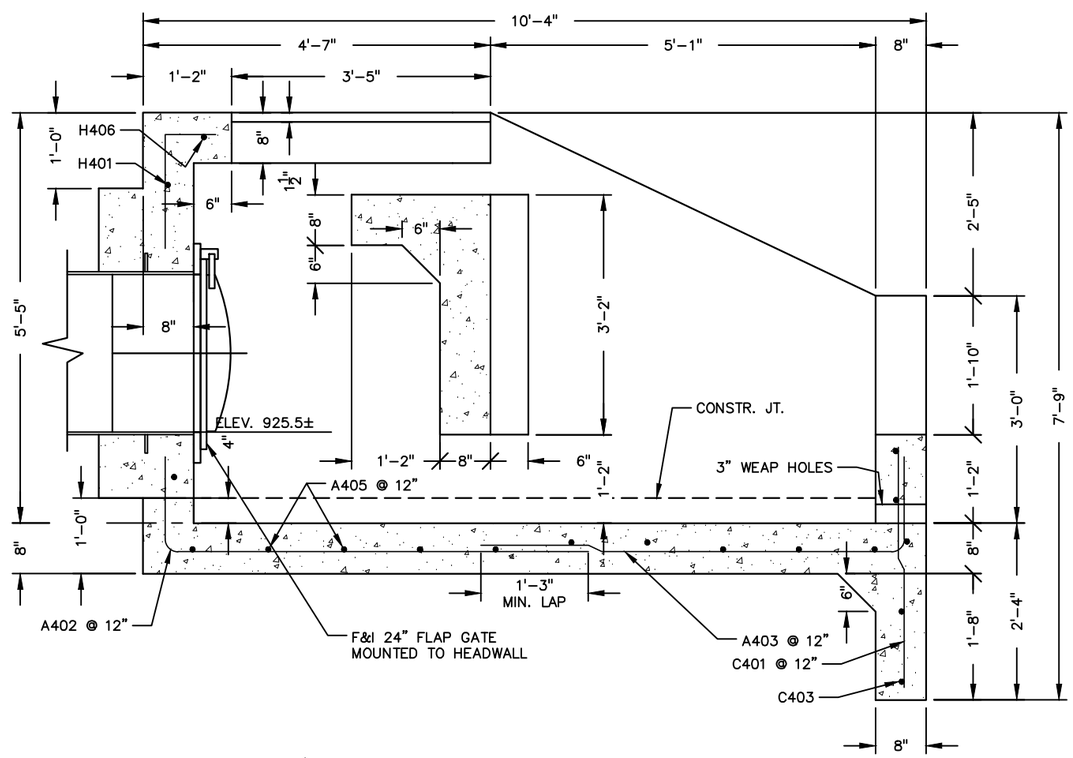

S1 2/2 SECTIONAL ELEVATION

SCALE: ½" = 1'-0"

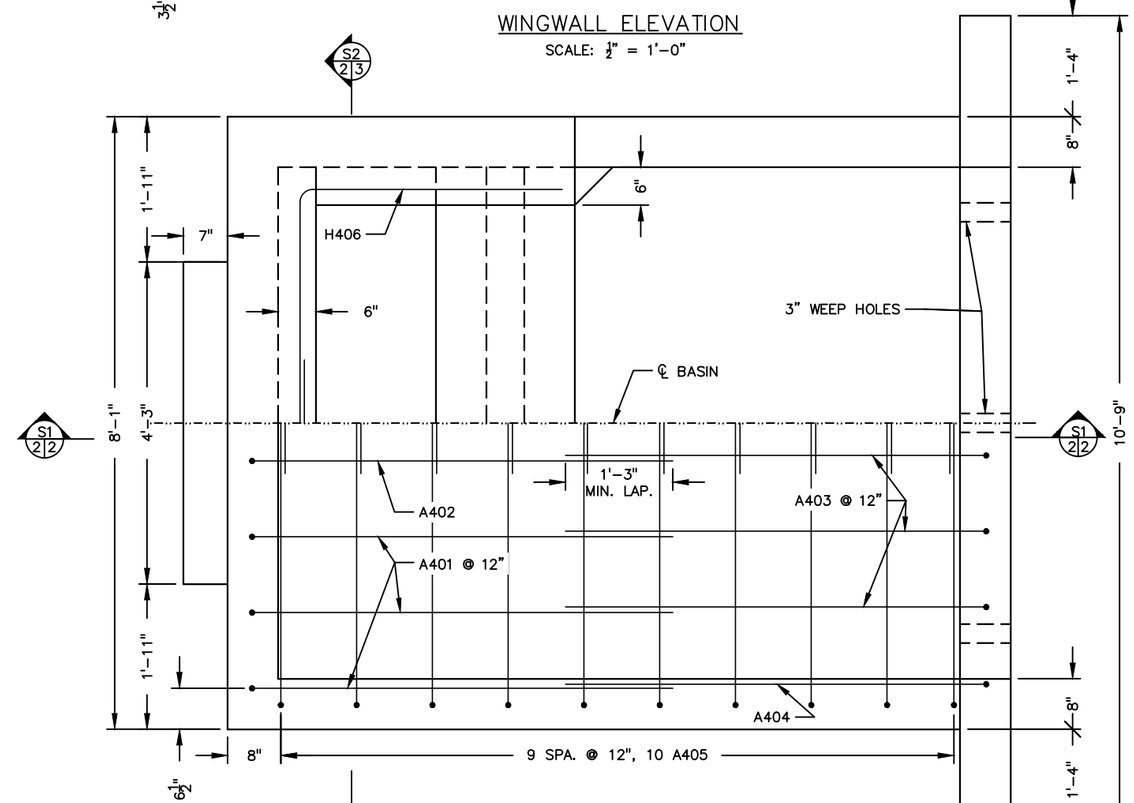

PLAN VIEW

SCALE: ½" = 1'-0"

whks
engineers + planners + land surveyors

BRAUN INTERTEC

REVISIONS

NO.	DATE	DESCRIPTION
1		

IMPACT BASIN DETAILS
HICKORY GROVE LAKE
LOW WATER DRAIN PIPE & VALVE
STORY COUNTY, IOWA

SCALE:	AS SHOWN
PROJECT NO.	8503
DRAWN BY:	JZ
CHECKED BY:	NA
SHEET	S-2

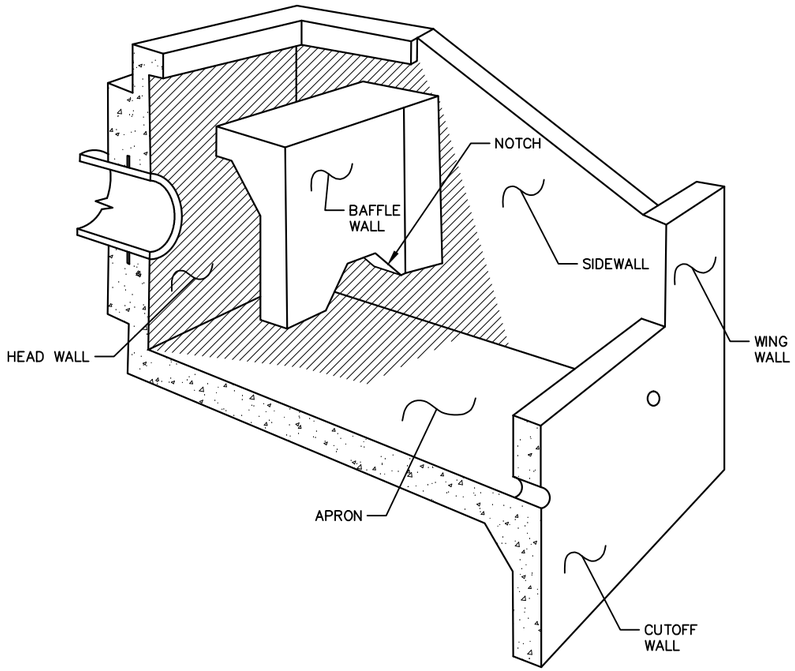

HALF PERSPECTIVE VIEW

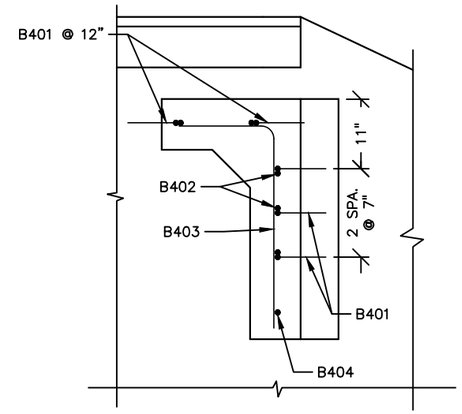

S3 3|3 TYPICAL SECTION THRU BAFFLE WALL

SCALE: ½" = 1'-0"

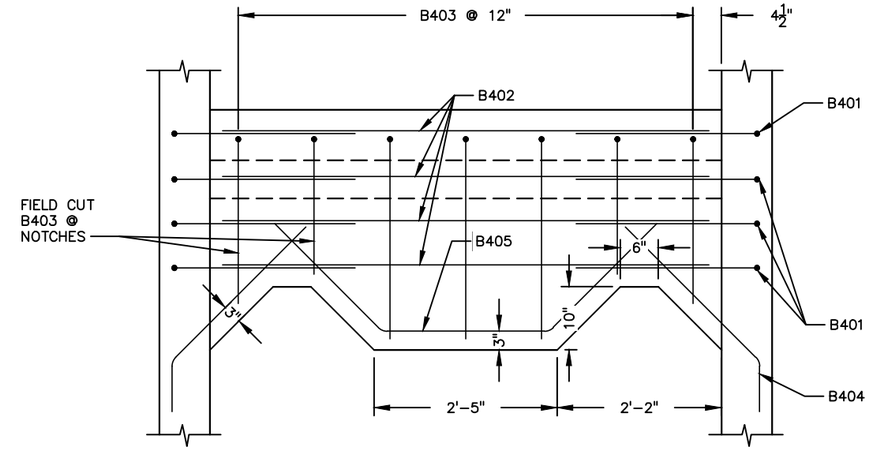

S4 3|3 TYPICAL ELEVATION VIEW OF BAFFLE WALL

SCALE: ½" = 1'-0"

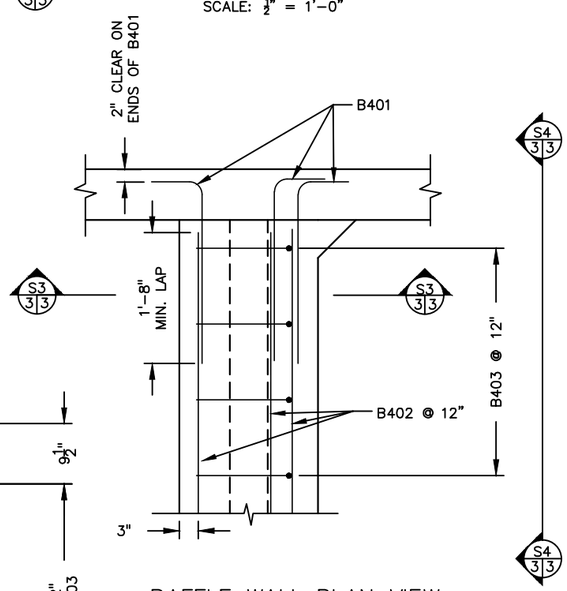

BAFFLE WALL PLAN VIEW

SCALE: ½" = 1'-0"

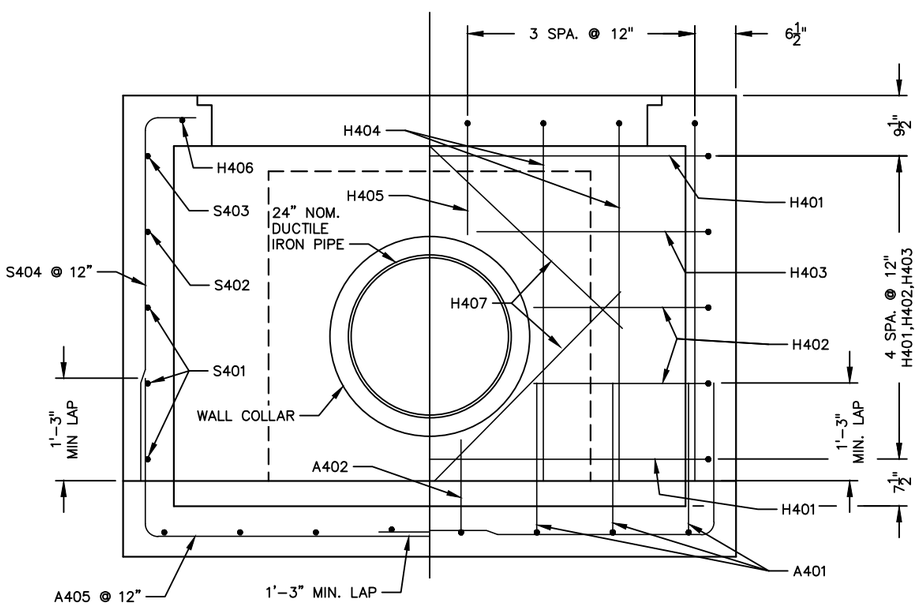

S2 2|3 TYPICAL SECTION THRU WALLS

SCALE: ½" = 1'-0"

GENERAL NOTES:

CAST IN-PLACE IMPACT BASIN OPTION IS SHOWN. A PRECAST ALTERNATE WITH SIMILAR DIMENSIONS MAY BE SUBSTITUTED CONTINGENT ON APPROVAL OF THE ENGINEER.

ALL REINFORCEMENT SHALL BE ASTM A615 GRADE 60

28 DAY CONCRETE STRENGTH, f'c = 4.0 KSI.

MINIMUM CLEAR DISTANCE FROM FACE OF CONCRETE TO NEAR REINFORCING BAR IS TO BE 2" UNLESS NOTED OR SHOWN.

ALL EXPOSED CONCRETE CORNERS SHALL HAVE A ¾" CHAMFER.

ALL REINFORCEMENT IS TO BE #4 BARS, WITH THE MAT CENTERED IN THE WALLS/APRON EXCEPT AS NOTED.

SET GRATING HOLD DOWN CLIP ANCHOR BOLTS AND FENCE BASE PLATE ANCHOR BOLTS IN RED HEAD EPCON G5 EPOXY GROUT OR EQUAL.

CONSTRUCTION JOINT CONCRETE SURFACE BETWEEN APRON AND WALLS SHALL BE INTENTIONALLY ROUGHENED

PROPOSED CONNECTION OF 24" DUCTILE IRON PIPE TO THE IMPACT BASIN IS AN EMBEDDED WALL COLLAR WITH WELDED WALL RING. CONTRACTOR MAY PROPOSED AN ALTERNATE DETAIL FOR APPROVAL BY THE ENGINEER.

CHAIN LINK FENCING, FENCE POSTS/BASE PLATES, AND ALL FENCE HARDWARE SHALL BE GALVANIZED.

ALL FENCE POSTS AND RAILS SHALL BE ASTM F 1043 GROUP 1A, WITH A YIELD STRENGTH OF 30,000 PSI.

ALL CHAINLINK MESH SHALL BE 2" #9 GAUGE.

whks engineers + planners + land surveyors

BRAUN INTERTEC

REVISIONS

NO.	DATE	DESCRIPTION
1		

IMPACT BASIN DETAILS
HICKORY GROVE LAKE
LOW WATER DRAIN PIPE & VALVE
STORY COUNTY, IOWA

SCALE:	AS SHOWN
PROJECT NO.	8503
DRAWN BY:	JZ
CHECKED BY:	NA
SHEET	S-3

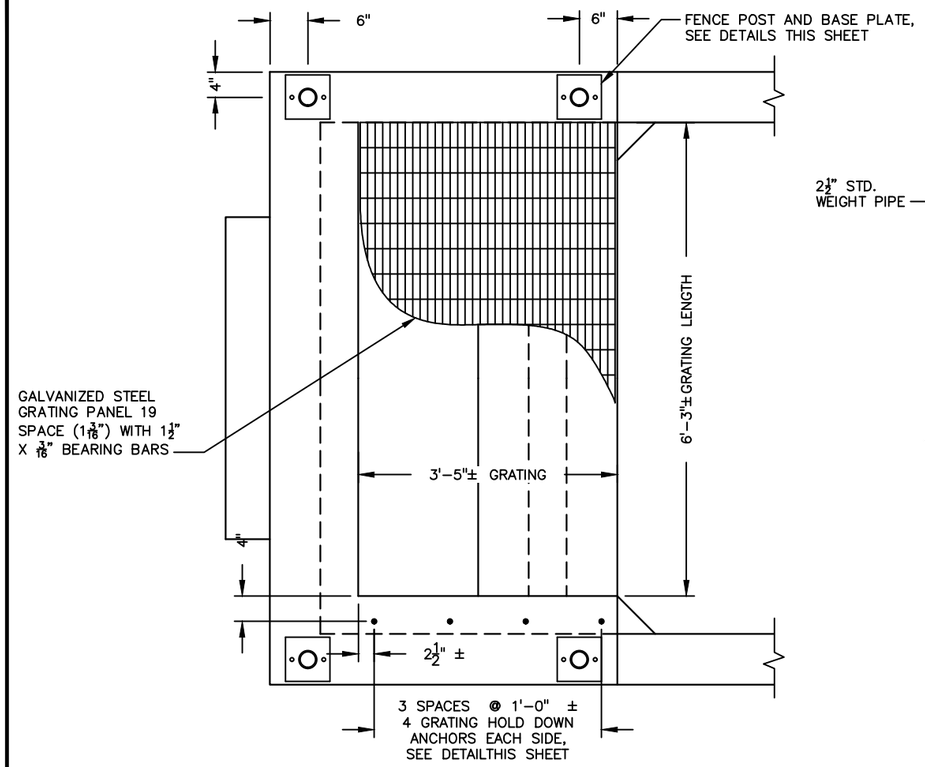

GRATING PLAN VIEW

SCALE: 1/2" = 1'-0"

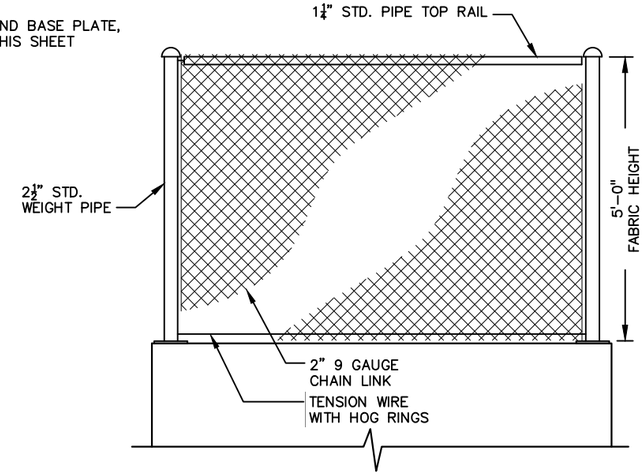

TYPICAL FENCE ELEVATION

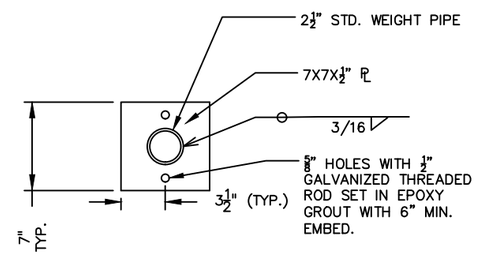

TYPICAL FENCE BASE PLATE DETAIL

SCALE: 1" = 1'-0"

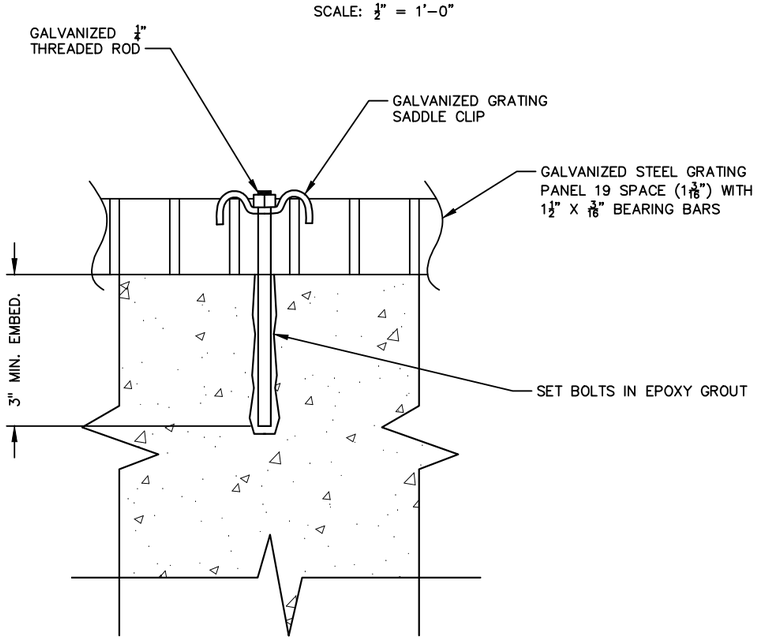

GRATING HOLD-DOWN DETAIL

SCALE: 4" = 1'-0"

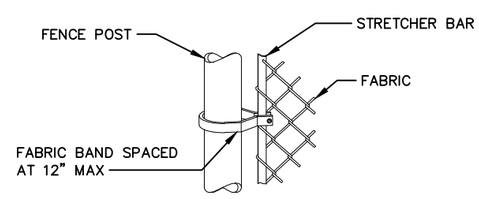

FABRIC TO POST FASTENING DETAIL

STEEL REINFORCING SCHEDULE

BAR	NO.	LENGTH	SHAPE	LOCATION	A	B
A401	6	7'-7"	BENT 1	APRON	2'-0"	5'-7"
A402	2	6'-10"	BENT 1	APRON	1'-3"	5'-7"
A403	6	6'-11"	BENT 1	APRON	1'-4"	5'-7"
A404	2	8'-9"	BENT 1	APRON	3'-2"	5'-7"
A405	20	6'-5"	BENT 1	APRON	2'-0"	4'-5"
C401	8	3'-1"	STRT.	CUTOFF WALL		
C402	1	9'-1"	STRT.	CUTOFF WALL		
C403	3	10'-5"	STRT.	CUTOFF WALL		
W401	4	4'-11"	STRT.	WINGWALL		
W402	6	3'-7"	BENT 1	WINGWALL	2'-1"	1'-6"
S401	6	9'-0"	STRT.	SIDEWALL		
S402	2	7'-4"	STRT.	SIDEWALL		
S403	2	5'-3"	STRT.	SIDEWALL		
S404	8	5'-6"	BENT 1	SIDEWALL	8"	4'-9 1/2"
S405	2	4'-8"	STRT.	SIDEWALL		
S406	2	4'-4"	STRT.	SIDEWALL		
S407	2	3'-10"	STRT.	SIDEWALL		
S408	2	3'-4"	STRT.	SIDEWALL		
S409	2	2'-10"	STRT.	SIDEWALL		
S410	2	2'-4"	STRT.	SIDEWALL		
S411	2	5'-11"	STRT.	SIDEWALL		
H401	4	6'-5"	BENT 1	HEADWALL	2'-1"	4'-4"
H402	4	4'-5"	BENT 1	HEADWALL	2'-1"	2'-4"
H403	2	5'-2"	BENT 1	HEADWALL	2'-1"	3'-1"
H404	6	5'-5"	BENT 1	HEADWALL	8"	4'-9"
H405	2	2'-2"	BENT 1	HEADWALL	8"	1'-6"
H406	2	7'-2"	BENT 1	HEADWALL	3'-9"	3'-5"
H407	4	3'-6"	STRT.	HEADWALL		
B401	10	3'-1"	BENT 1	BAFFLE WALL	8"	2'-5"
B402	5	6'-5"	STRT.	BAFFLE WALL		
B403	7	3'-11"	BENT 1	BAFFLE WALL	1'-3"	2'-8"
B404	2	3'-2"	BENT 2	BAFFLE WALL	8"	2'-6"
B405	1	6'-2"	BENT 3	BAFFLE WALL	2'-0"	2'-2"

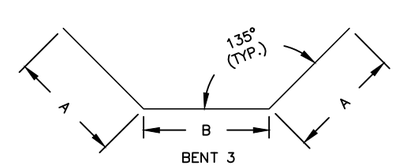

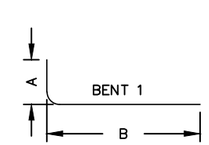

STRT.

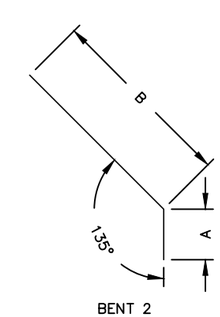

BAR TYPES

whks engineers + planners + land surveyors

BRAUN INTERTEC

REVISIONS

NO.	DATE	DESCRIPTION
1		

IMPACT BASIN DETAILS
HICKORY GROVE LAKE
LOW WATER DRAIN PIPE & VALVE
STORY COUNTY, IOWA

SCALE: AS SHOWN
PROJECT NO. 8503
DRAWN BY: JZ
CHECKED BY: NA
SHEET S-4

POLLUTION PREVENTION PLAN (PPP) FOR STORM WATER RUNOFF

STORM WATER POLLUTION PREVENTION PLAN

ALL CONTRACTORS/SUBCONTRACTORS SHALL CONDUCT THEIR OPERATIONS IN A MANNER THAT MINIMIZES EROSION AND PREVENTS SEDIMENTS AND DRILLING FLUIDS FROM LEAVING THE PROJECT SITE. THE PRIME CONTRACTOR SHALL BE RESPONSIBLE FOR COMPLIANCE AND IMPLEMENTATION OF THE STORM WATER POLLUTION PREVENTION PLAN (PPP). THIS RESPONSIBILITY SHALL BE FURTHER SHARED WITH SUBCONTRACTORS WHOSE WORK IS A SOURCE OF POTENTIAL POLLUTION.

1. SITE DESCRIPTION

THIS POLLUTION PREVENTION PLAN (PPP) IS FOR DEVELOPMENT THAT INCLUDES TRENCH EXCAVATION, GRADING, HORIZONTAL DIRECTIONAL DRILLING AND OTHER WORK ITEMS REQUIRED FOR SITE IMPROVEMENT FOR LAND LOCATED IN SECTION 22, T83N, R22E, STORY COUNTY, IOWA. THE PROPERTY AREA IS APPROXIMATELY 80 ACRES WITH A DISTURBED AREA OF LESS THAN 1 ACRE. WHILE THE DISTURBANCE ON THE SITE IS MINIMAL, THERE IS CONSIDERABLE POTENTIAL FOR EROSION DUE TO THE NATURE OF THE WORK AND THE CONSTRUCTION METHODS UTILIZED. THE PROJECT IS LOCATED IN AN AREAS OF COLAND CLAY LOAM. REFER TO THE PROJECT CONSTRUCTION PLANS FOR LOCATIONS OF TYPICAL SLOPES, DITCH GRADES, AND STRUCTURAL AND NON STRUCTURAL CONTROLS. A COPY OF THE CONSTRUCTION PLANS WILL BE ON FILE WITH THE CONTRACTOR, AT THE STORY COUNTY CONSERVATION OFFICE (ON-SITE) AND AT THE PROJECT ENGINEER'S OFFICE. RUNOFF FROM THIS WORK WILL FLOW TO AN UNNAMED DRAINAGE TO EAST INDIAN CREEK AND ULTIMATELY TO THE SOUTH SKUNK RIVER.

2. POTENTIAL SOURCE OF POLLUTION

THE PRIMARY SOURCES OF POLLUTION FROM THIS PROJECT SITE ARE VARIOUS DRILLING FLUIDS AND SEDIMENT FROM INTERNAL EROSION OF THE RESERVOIR AREA. AS HICKORY GROVE RESERVOIR IS LOWERED THERE WILL BE EROSION BEGINNING AT THE UPPER END OF THE POOL AREA THAT WILL TRANSPORT SEDIMENT TOWARDS THE LOWER AREAS IN THE POOL. WHILE THIS MATERIAL IS NATURALLY DEPOSITED MEASURES MUST BE TAKEN TO REDUCE THE AMOUNT OF SEDIMENT RELEASED DOWNSTREAM THROUGH THE CONTROL STRUCTURE.

3. CONTROLS

PRIOR TO BEGINNING CLEARING AND GRUBBING OPERATIONS, EXCAVATION, OR OTHER SOIL DISTURBING OPERATIONS THAT MAY RESULT IN SEDIMENT LEAVING THE PROJECT SITE, SILT FENCE AND WATTLES SHALL BE PLACED TO CONTAIN SEDIMENT RELEASED DURING THE CONSTRUCTION ACTIVITIES. SILT FENCE AND WATTLES SHALL BE PLACED IN AREAS OUTLINED ON EROSION PLAN SHEETS. SILT FENCE OR WATTLES SHALL ALSO BE LOCATED AT THE TOE OF UNSTABILIZED SLOPES. SILT FENCE AND WATTLE PLACEMENT SHALL BE COORDINATED WITH ALL PROJECT CONTRACTORS TO MINIMIZE REMOVING AND REPLACING SILT FENCE AND WATTLES IN ORDER TO BRING THE SITE TO THE FINISH CONTOUR ELEVATIONS.

SEQUENCE: ANTICIPATED SEQUENCE OF MAJOR CONSTRUCTION ACTIVITIES IS AS FOLLOWS:
1. LOWER RESERVOIR
2. CONSTRUCT SITE ACCESS
3. CLEAR/GRUB AND STRIP TOPSOIL.
4. CONDUCT EXCAVATION AND UTILITY INSTALLATION OPERATIONS.
5. CONDUCT INLET/OUTLET STRUCTURES.
6. REPLACE TOPSOIL AND CONDUCT FINISH GRADING.
7. SITE CLEANUP AND HYRO-SEEDING.

FOR THE ABOVE ANTICIPATED SEQUENCE OF MAJOR CONSTRUCTION ACTIVITIES THE FOLLOWING EROSION CONTROL MEASURES SHALL BE THE MINIMUM REQUIRED PROTECTION PRIOR TO THE START OF ANY ACTIVITY.

1. PERIMETER SILT FENCE OR WATTLES.
2. CONSTRUCTION STABILIZED EXIT WHERE ACTIVITY ENCROACHES ON ADJACENT PUBLIC ROADWAYS
3. FLOATING SILT CURTAIN
4. FINAL STABILIZATION.

AS THE WORK PROGRESSES, ADDITIONAL EROSION CONTROL MEASURES SHALL BE INSTALLED AS REQUIRED TO MINIMIZE EROSION AND SEDIMENT TRANSPORT. THESE MEASURES MAY INCLUDE, BUT NOT BE LIMITED TO, TEMPORARY AND PERMANENT SEEDING, SILT FENCE, RIPRAP, AND ADDITIONAL WATTLES.

ALL ACTIVITIES SHALL BE CONDUCTED IN A LOGICAL SEQUENCE AS TO MINIMIZE THE AMOUNT OF BARE SOIL EXPOSED AT ANY ONE TIME. MAINTAIN EXISTING VEGETATION AS LONG AS POSSIBLE. VEGETATION IN AREAS NOT NEEDED FOR CONSTRUCTION SHALL BE PRESERVED.

TEMPORARY AND PERMANENT STABILIZED SEEDING SHALL BE COMPLETED AS DISTURBED AREAS ARE CONSTRUCTED. IF CONSTRUCTION ACTIVITY IS NOT PLANNED TO OCCUR IN A DISTURBED AREA FOR AT LEAST TWENTY-ONE (21) DAYS, THE AREA SHALL BE STABILIZED BY TEMPORARY/PERMANENT HYDRO-SEEDING OR MULCHING WITHIN FOURTEEN (14) DAYS. OTHER STABILIZING BEST MANAGEMENT PRACTICES SHALL BE USED TO STABILIZE THE SOIL TO PREVENT EROSION AND SEDIMENT RUNOFF OUTSIDE THE SEEDING PERIOD. THE CONTRACTOR SHALL COMPLETE THE CONSTRUCTION AND RESEED AS NECESSARY UNTIL THE ESTABLISHMENT OF PERMANENT VEGETATION OF ALL DISTURBED AREAS.

EROSION CONTROL WORK SHALL BE DONE IN ACCORDANCE WITH THE CURRENT 'IOWA CONSTRUCTION SITE EROSION CONTROL MANUAL'.

THE CONTRACTOR SHALL BE FAMILIAR WITH THESE EROSION AND SEDIMENT CONTROL MEASURES AND SHALL FOLLOW THE PLANS AND SPECIFICATIONS AS WELL AS ANY OTHER SOURCES AS OUTLINED IN SPECIFICATIONS TO DETERMINE HOW THESE MEASURES ARE TO BE CONSTRUCTED, MAINTAINED, AND REMOVED.

4. STORM WATER MANAGEMENT

THE ANTICIPATED SEQUENCE OF CONSTRUCTION OPERATIONS WILL BE AS INDICATED IN SECTION 3 ABOVE. DISTURBED SLOPES SHALL BE STABILIZED, WEATHER PERMITTING, WITH TOPSOIL, MULCH, SEED, AND FERTILIZER WITHIN 1 DAY OF CONSTRUCTION. SILT FENCE/WATTLES WILL BE PLACED AS NEEDED TO REDUCE SEDIMENT TRANSPORT. EXTRA CARE SHALL BE TAKEN WHEN THE TEMPERATURE ALLOWS SOILS TO THAW, ESPECIALLY WHEN SPRING SNOW MELT AND RAINS APPROACH. VEGETATION SHALL NOT BE DISTURBED IN AREAS OUTSIDE THE CONSTRUCTION LIMITS.

A CONSTRUCTION ENTRANCE SHALL BE ESTABLISHED AT EACH OF THE PRIMARY POINTS OF ACCESS TO THE CONSTRUCTION SITE. TEMPORARY SEEDING OR MULCHING WITHIN 1-DAY, WEATHER PERMITTING, SHALL STABILIZE THE AREA IF CONSTRUCTION ACTIVITIES ARE NOT PLANNED TO OCCUR IN AN AREA FOR AT LEAST SEVENTY-TWO (72) HOURS. OTHER STABILIZATION METHODS SHALL BE USED IN THE INTERIM. IF NECESSARY, DIVERSIONARY STRUCTURES, SUCH AS SMALL DIKES AND SWALES, SHALL BE CONSTRUCTED TO CONTROL DIRECTION AND FLOW OF RUNOFF.

5. TOPSOIL PRESERVATION

PRESERVATION OF TOPSOIL IS REQUIRED ON THIS PROJECT. ON AREAS WHERE 4.0 INCHES OF TOPSOIL EXISTED PRIOR TO BEGINNING SOIL DISTURBING ACTIVITIES, THE MINIMUM DEPTH OF TOPSOIL AFTER DISTURBING ACTIVITIES HAVE BEEN COMPLETED SHALL BE EQUAL TO, OR GREATER THAN, 4.0 INCHES OF TOPSOIL. ON AREAS WHERE LESS THAN 4.0 INCHES OF TOPSOIL EXISTED PRIOR TO BEGINNING SOIL DISTURBING ACTIVITIES, THE MINIMUM DEPTH OF TOPSOIL AFTER SOIL DISTURBING ACTIVITIES HAVE BEEN COMPLETED SHALL BE EQUAL TO, OR GREATER THAN, THE DEPTH OF TOPSOIL THAT EXISTED PRIOR TO BEGINNING SOIL DISTURBING ACTIVITIES.

6. OTHER CONTROLS

CONTRACTOR DISPOSAL OF UNUSED CONSTRUCTION MATERIALS AND CONSTRUCTION MATERIAL WASTES SHALL COMPLY WITH APPLICABLE STATE AND LOCAL WASTE DISPOSAL, SANITARY SEWER, OR SEPTIC SYSTEM REGULATIONS. IN THE EVENT OF A CONFLICT WITH OTHER GOVERNMENTAL LAWS, RULES, AND REGULATIONS, THE MORE RESTRICTIVE LAWS, RULES, OR REGULATIONS SHALL APPLY.

HAZARDOUS MATERIALS STORED ON SITE SHALL BE STORED SUCH THAT ANY LEAK MAY BE READILY CONTAINED AND SO THAT ANY LEAK WILL NOT FLOW FROM THE SITE.

ANY STAGING AREAS ARE TO BE PROTECTED IN COMPLIANCE WITH ALL APPLICABLE LAWS AS TO PREVENT DIESEL OR ANY OTHER VEHICLE RELATED POLLUTION TO FLOW FROM THE SITE.

THE CONTRACTOR SHALL TAKE NOTE OF THE CONSTRUCTION BOUNDARY DELINEATED ON THE PLAN. ON SITE AREAS OUTSIDE OF THE CONSTRUCTION BOUNDARY SHALL BE CONSIDERED PRESERVED AREAS UNLESS OTHERWISE DIRECTED BY THE OWNER. THE CONTRACTOR SHALL TAKE CARE NOT TO DISTURB ANY AREA OUTSIDE THIS BOUNDARY WITHOUT PRIOR PERMISSION BY THE OWNER. THE OWNER SHALL DETERMINE IF ADDITIONAL EROSION AND SEDIMENT CONTROL MEASURES ARE REQUIRED PRIOR TO ALLOWING WORK OR STORAGE OF EQUIPMENT OR MATERIALS BEYOND THE ILLUSTRATED CONSTRUCTION LIMITS.

7. APPROVED STATE OR LOCAL PLANS

DURING THE COURSE OF THIS CONSTRUCTION, IT IS POSSIBLE THAT SITUATIONS WILL ARISE WHERE UNKNOWN MATERIALS WILL BE ENCOUNTERED. WHEN SUCH SITUATIONS ARE ENCOUNTERED, THEY WILL BE HANDLED ACCORDING TO ALL APPLICABLE FEDERAL, STATE, AND LOCAL REGULATIONS IN EFFECT AT THE TIME. IN THE EVENT OF A CONFLICT, THE MORE RESTRICTIVE LAWS, RULES OR REGULATIONS SHALL APPLY.

SECTION 161A.64 OF THE CODE OF IOWA REQUIRES THAT PRIOR TO PERFORMING ANY LAND-DISTURBING ACTIVITY, A SIGNED AFFIDAVIT MUST BE FILED WITH THE LOCAL SOIL AND WATER CONSERVATION DISTRICT STATING THAT THE PROJECT WILL NOT EXCEED MAXIMUM DESIRED SOIL LOSS LIMITS. THE CONTRACTOR SHALL BE RESPONSIBLE FOR PROVIDING THIS AFFIDAVIT.

8. MAINTENANCE

THE GENERAL CONTRACTOR IS REQUIRED TO MAINTAIN ALL EROSION CONTROL MEASURES IN PROPER WORKING ORDER, INCLUDING CLEANING, REPAIRING, OR REPLACING THEM THROUGHOUT THE CONTRACT PERIOD. THE OWNER SHALL BE RESPONSIBLE FOR THESE MEASURES FOLLOWING THE GENERAL CONTRACTOR'S CONTRACT PERIOD. CLEANING OF SILT CONTROL DEVICES SHALL BEGIN WHEN THE FEATURES HAVE LOST 50% OF THEIR CAPACITY.

MAINTENANCE SHALL INCLUDE REMOVAL OF SEDIMENT FROM STREETS, DITCHES AND OFF-SITE AREAS FOLLOWING EACH RAIN EVENT OR AS REQUIRED AT THE END OF EACH WORK DAY DUE TO CONTRACTOR'S WORK METHODS (SUCH AS DUE TO TRACKING OF SOIL AND SEDIMENT ON LOCAL ROADS).

ALL OFF-SITE SEDIMENT DEPOSITS OCCURRING AS A RESULT OF CONSTRUCTION WORK OR A STORM EVENT SHALL BE CLEANED UP BY THE END OF EACH DAY. FLUSHING SHALL NOT BE ALLOWED.

9. INSPECTIONS

QUALIFIED PERSONNEL SHALL INSPECT AND DOCUMENT DISTURBED AREAS OF THE CONSTRUCTION SITE THAT HAVE NOT BEEN STABILIZED WITH A PERENNIAL, VEGETATIVE COVER OF SUFFICIENT DENSITY TO PRECLUDE EROSION AT LEAST ONCE EVERY SEVEN CALENDAR DAYS. UNLESS EROSION IS EVIDENT OR OTHER CONDITIONS WARRANT THEM, REGULAR INSPECTIONS ARE NOT REQUIRED ON AREAS THAT HAVE BEEN STABILIZED WITH A PERENNIAL, VEGETATIVE COVER OF SUFFICIENT DENSITY TO PRECLUDE EROSION. AT A MINIMUM THE FOLLOWING ITEMS SHALL BE EVALUATED DURING EACH INSPECTION:

a. INSPECT DISTURBED AREAS AND AREAS USED FOR STORAGE OF MATERIALS AND VEHICLES FOR EVIDENCE OF POLLUTANTS LEAVING THE SITE AND/OR ENTERING THE DRAINAGE SYSTEM.
b. INSPECT EROSION AND SEDIMENT CONTROL MEASURES TO ENSURE THEY ARE FUNCTIONING CORRECTLY.
c. INSPECT DISCHARGE LOCATIONS TO ASCERTAIN IF THE CURRENT CONTROL MEASURES ARE EFFECTIVE IN PREVENTING SIGNIFICANT IMPACTS TO THE RECEIVING WATERS.
d. INSPECT LOCATIONS WHERE VEHICLES ENTER/EXIT THE CONSTRUCTION SITE FOR SIGNS OF SEDIMENT TRACKING.
e. PREPARE AN INSPECTION REPORT THAT LISTS THE DATE, NAME OF INSPECTOR, INSPECTOR'S QUALIFICATIONS, SUMMARIZES THE INSPECTION, AND NOTES ANY MAINTENANCE OF THE CONTROLS OR REQUIRED CHANGES TO THE PPP.
f. IMPLEMENT THE REQUIRED MAINTENANCE OR CHANGES WITHIN THREE CALENDAR DAYS FOLLOWING THE DAY OF THE INSPECTION.

THE CONTRACTOR SHALL IMMEDIATELY BEGIN CORRECTIVE ACTION ON ALL DEFICIENCIES FOUND. THE FINDINGS OF THE INSPECTIONS SHALL BE RECORDED BY THE CONTRACTOR IN AN INSPECTION REPORT THAT SHALL BE PREPARED AND MAINTAINED AS PART OF THE PPP UNTIL COMPLETION OF THE PROJECT. INSPECTION REPORTS SHALL BE SUBMITTED TO THE OWNER ON THE DAY THAT THEY ARE PREPARED. THE PPP MAY BE REVISED BY THE CONTRACTOR BASED ON THE FINDINGS OF THE INSPECTION. THE CONTRACTOR SHALL IMPLEMENT ALL REVISIONS. ALL CORRECTIVE ACTIONS SHALL BE COMPLETED WITHIN THREE (3) CALENDAR DAYS OF THE INSPECTION.

A COPY OF THE INSPECTION REPORTS AND CURRENT PPP SHALL BE KEPT AT THE PROJECT SITE AND SHALL BE MADE READILY AVAILABLE TO THE OWNER, IDNR, THE EPA OR OTHER REGULATORY PERSONNEL UPON REQUEST.

10. NON-STORM DISCHARGES

NON-STORM DISCHARGES INCLUDE SUBSURFACE DRAINS (I.E. COLLECTOR LINES AND FIELD TILE). THE VELOCITY OF DISCHARGE FOR SUBSURFACE DRAINS MAY BE CONTROLLED BY THE USE OF PATIO BLOCKS OR EROSION STONE.

NON-STORM DISCHARGES ALSO INCLUDE INTERNAL EROSION OF SEDIMENT WITHIN THE POOL AREA

11. CONTRACTORS

ALL CONTRACTORS AND SUBCONTRACTORS THAT WILL IMPLEMENT EACH EROSION CONTROL MEASURE SHALL BE REQUIRED TO SIGN A CERTIFICATION STATEMENT MAKING THEM A CO-PERMITTEE WITH THE OWNER AND OTHER CONTRACTORS REQUIRING THEM TO MEET FEDERAL CLEAN WATER ACT, THE CODE OF IOWA, STATE OF IOWA NPDES, AND LOCAL EROSION AND SEDIMENT CONTROL REQUIREMENTS UNDER PENALTY OF LAW.

SEE CONTRACT DOCUMENTS FOR A COPY OF THE STORM WATER CONTRACTOR CERTIFICATION STATEMENT AND INSPECTION CHECKLIST.

EROSION & SEDIMENT CONTROL SCHEDULE:

1) MARK CONSTRUCTION LIMITS AND "DO NOT DISTURB AREAS"
2) INSTALL PERIMETER EROSION CONTROL
3) CONSTRUCT STABILIZED CONSTRUCTION EXIT
4) CONDUCT CONSTRUCTION OPERATIONS
5) COMPLETE MAINTENANCE AND REPAIRS OF EROSION AND SEDIMENT CONTROLS
6) STABILIZE FINAL INCREMENT OF CONSTRUCTION AREA
7) MONITOR GRASS GROWTH AND RESEED WHERE NEEDED UNTIL SITE IS STABILIZED
8) REMOVE SILT FENCE/WATTLES AND OTHER EROSION CONTROLS

GENERAL NOTES:

1) CONTRACTOR IS NOTIFIED THAT ACTIONS ON THE PROJECT GOVERNED BY AN INDIVIDUAL STORM WATER POLLUTION PREVENTION PLAN (SWPPP). THIS PLAN SHEET. THE PLANS AND SPECIFICATIONS AND THE SWPPP INCORPORATES SEDIMENTATION AND EROSION CONTROL MEASURES THAT THE CONTRACTOR MUST COMPLY WITH.

2) THE EROSION CONTROL PLAN IS A CONSTANTLY CHANGING DOCUMENT AND IS DIRECTLY RELATED TO THE CONSTRUCTION ACTIVITIES OCCURRING AT ANY GIVEN TIME. THEREFORE, A SINGLE COMPREHENSIVE PLAN CANNOT BE SUPPLIED. THE OWNER AND HIS CONTRACTORS WILL NEED TO CONSTANTLY UPDATE AND ADD OR REMOVE EROSION AND SEDIMENTARY DEVICES. NOT ALL AVAILABLE CONTROL DEVICES ARE LISTED HERE. THE STATE URBAN DESIGN AND SPECIFICATIONS (SUDAS) IS AN EXCELLENT RESOURCES FOR THE EROSION CONTROL DEVICES AND HOW/WHERE TO USE THEM. SEE CHAPTER 7 IN THE SUDAS DESIGN MANUAL.

3) THE CONTRACTOR IS RESPONSIBLE FOR DETERMINING IF THE PERMITS HAVE BEEN SECURED PRIOR TO STARTING WORK.

4) THE CONTRACTOR SHALL PROVIDE AN EROSION CONTROL SUPERVISOR FOR THIS PROJECT. THE EROSION CONTROL SUPERVISOR WILL OVERSEE IMPLEMENTATION OF THE SWPPP.

5) ALL STORM SEWER INLETS AND CULVERTS SHALL BE PROTECTED TO PREVENT SEDIMENT FROM ENTERING THE SYSTEM BY APPROVED TREATMENT.

6) STABILIZED CONSTRUCTION EXIT MUST BE PROVIDED AT ALL EXIT POINTS.

7) CONTRACTOR IS RESPONSIBLE FOR CLEANING UP ANY SEDIMENT DEPOSITED ON ADJOINING PROPERTIES, IN THE STREETS, OR OTHER ON OR OFF SITE LOCATIONS.

8) ALL SEDIMENT LADEN WATER PUMPED FROM THE SITE SHALL BE TREATED BY A TEMPORARY SEDIMENT BASIN OR BE FILTERED BY OTHER APPROVED MEANS. WATER SHALL NOT BE DISCHARGED IN A MANNER THAT CAUSES EROSION OF THE SITE OR RECEIVING CHANNELS.

whks engineers + planners + land surveyors

BRAUN INTERTEC

REVISIONS

NO.	DATE	DESCRIPTION
1		
2		

POLLUTION PREVENTION PLAN
HICKORY GROVE LAKE
LOW WATER DRAIN PIPE AND VALVE
STORY COUNTY, IOWA

SCALE: AS SHOWN
PROJECT NO. 8503
DRAWN BY: NWA
CHECKED BY:
SHEET P-1

F&I ROCK CONSTRUCTION ENTRANCE
SUDAS DETAIL 9040.120

F&I FLOATING SILT CURTAIN
IDOT STANDARD PLAN EC-202

SEED & MULCH ALL DISTURBED AREAS
IDOT TABLE 9010.07 (TYPE 2 MIX)

F&I EROSION CONTROL MAT ON
SEEDED CHANNEL SLOPE
SUDAS DETAIL 9040.103

ST-02

F&I SILT FENCE (250 LF)
SUDAS DETAIL 9040.119

ST-03

F&I ROCK CONSTRUCTION ENTRANCE
SUDAS DETAIL 9040.120

EXCAVATE 5' DEEP POOL EXTENDING OUT
(20' RADIUS) AROUND PUMP INLET(S).
F&I FLOATING SILT CURTAIN (10' RADIUS)
AROUND INLET(S). IDOT EC-202
LOCATION AND CONFIGURATION MAY VARY
DEPENDING ON PUMP LOCATION. CREATE
ZONE OF EXCLUSION TO LIMIT SEDIMENT
FROM ENTERING PUMP. CURTAIN ONLY
REQUIRED ONCE RESERVOIR IS LOWERED.

F&I FLOATING SILT CURTAIN
10' RADIUS (31 LF) AROUND
INLET UPON COMPLETION
IDOT EC-202

CONTRACTOR SHALL DEVELOP, SUBMIT, AND
IMPLEMENT PLAN TO CONTROL DRILLING FLUIDS.
DISCHARGE OF DRILLING FLUIDS SHALL NOT BE ALLOWED.

N

HORIZ.

75 0 75 150 ft

whks
engineers + planners + land surveyors

BRAUN INTERTEC

REVISIONS

NO.	DATE	DESCRIPTION
1		

EROSION & SEDIMENT CONTROL PLAN
HICKORY GROVE LAKE
LOW WATER DRAIN PIPE AND VALVE
STORY COUNTY, IOWA

SCALE: AS SHOWN
PROJECT NO. 8503
DRAWN BY: NWA
CHECKED BY:
SHEET P-2