IOWA DEPARTMENT OF NATURAL RESOURCES

CONSTRUCTION DRAWINGS FOR OFFICE & STORAGE BUILDING (REBID) AT VIKING LAKE STATE PARK MONTGOMERY COUNTY, IOWA

IOWA ONE CALL
1-800-292-8989 | 811
www.iowaonecall.com

PROJECT # 17-04-69-02
PLANS PREPARED BY
LAND AND WATERS BUREAU
CONSERVATION AND RECREATION DIVISION

REGISTERED PROFESSIONAL ARCHITECT
RYAN E. RICHEY
06461
IOWA

I hereby certify that this architectural document was prepared by me or under my direct personal supervision and that I am a duly Registered Professional Architect under the laws of the State of Iowa.

RYAN E. RICHEY DATE

My license renewal date is June 30, 2019.

Pages or sheets covered by this seal:

A-001 – A-600

LICENSED PROFESSIONAL ENGINEER
BRETT JOHNSON
13653
IOWA

I hereby certify that this engineering document was prepared by me or under my direct personal supervision and that I am a duly LICENSED Professional ENGINEER under the laws of the State of Iowa.

BRETT JOHNSON DATE

My license renewal date is DECEMBER 31, 2019.

Pages or sheets covered by this seal:

C1 – C7

LICENSED PROFESSIONAL ENGINEER
CHAD D. BASS
21397
IOWA

I hereby certify that this engineering document was prepared by me or under my direct personal supervision and that I am a duly LICENSED Professional ENGINEER under the laws of the State of Iowa.

CHAD D. BASS DATE

My license renewal date is DECEMBER 31, 2019.

Pages or sheets covered by this seal:

M0.0 – P3.0

LICENSED PROFESSIONAL ENGINEER
JAMES R. DEEDS IV
17588
IOWA

I hereby certify that this engineering document was prepared by me or under my direct personal supervision and that I am a duly LICENSED Professional ENGINEER under the laws of the State of Iowa.

JAMES R. DEEDS IV DATE

My license renewal date is DECEMBER 31, 2018.

Pages or sheets covered by this seal:

E0.0 – E5.0

SHEET INDEX

SHEET. NO.	SHEET TITLE
	ARCHITECTURAL
A-001	COVER SHEET
A-002	WALL TYPES, NOTES & SYMBOLS
A-003	PROJECT LOCATION
	CIVIL
C1	SURVEY CONTROL
C2	DEMOLITION PLAN
C3	DIMENSION PLAN
C4	GRADING PLAN
C5	UTILITY PLAN
C6	SANITARY SEWER PLAN
C7	STANDARD DETAILS
	ARCHITECTURAL
A-010	ARCHITECTURAL SITE DETAILS
A-011	ARCHITECTURAL SITE PLAN
A-020	LIFE SAFETY PLAN
A-100	REFERENCE FLOOR PLAN
A-101	DIMENSION FLOOR PLAN
A-110	REFLECTED CEILING
A-120	EXTERIOR ELEVATIONS
A-121	EXTERIOR ELEVATIONS
A-130	BUILDING SECTIONS AND ROOF DETAILS
A-131	BUILDING SECTIONS
A-140	ENLARGED FLOOR PLAN
A-141	INTERIOR ELEVATIONS & MILLWORK SECTIONS
A-202	LIFE SAFETY PLAN
A-210	REFERENCE FLOOR PLAN
A-220	BUILDING ELEVATIONS
A-230	BUILDING SECTIONS
A-600	FINISH, DOOR & WINDOW SCHEDULES
	MECHANICAL
M0.0	MECHANICAL SYMBOLS AND NOTES
M1.0	OFFICE FLOOR PLAN – MECHANICAL
M2.0	MECHANICAL DETAILS
M3.0	MECHANICAL SCHEDULES
	PLUMBING
P0.0	OFFICE UNDERFLOOR PLAN – PLUMBING
P1.0	OFFICE FLOOR PLAN – PLUMBING
P2.0	STORAGE FLOOR PLAN – PLUMBING
P3.0	PLUMBING SCHEDULES AND DETAILS
	ELECTRICAL
E0.0	ELECTRICAL SYMBOLS, NOTES & SITE PLAN
E1.0	OFFICE FLOOR PLAN – LIGHTING
E2.0	OFFICE FLOOR PLAN – POWER
E3.0	STORAGE FLOOR PLAN – ELECTRICAL
E4.0	ELECTRICAL DETAILS
E5.0	ELECTRICAL SCHEDULES

BID ITEMS

ITEM NUMBER	ITEM DESCRIPTION	ESTIMATED QUANTITY
1	REMOVAL OF EXISTING ACC PAVEMENT	291.5 SY
2	TREE CLEARING AND GRUBBING	1 LS
3	FULL DEPTH SAW CUT	138 LF
4	GRADING	1 LS
5	SEEDING, FERTILIZING AND MULCHING	1 LS
6	8" FILTER SOCK	160 LF
7	WILKINSON PRECAST 1250 GALLON SEPTIC TANK (OR EQUIVALENT)	1 LS
8	ORENCO EFFLUENT FILTER MODEL #FTS0444-36V (OR EQUIVALENT)	1 LS
9	TUF-TITE MODEL #6HD2 DISTRIBUTION BOX (OR EQUIVALENT)	1 LS
10	4" SANITARY SEWER SERVICE (PVC SDR 35)	134 LF
11	4" 45 DEGREE BENDS (PVC SDR 35)	8 EA
12	QUICK4 STANDARD CHAMBERS (4'-0" LENGTHS)	36 EA
13	QUICK4 MULTIPORT END CAPS	8 EA
14	4" SCHEDULE 40 (2LF) WITH COVERS & COUPLING RINGS	5 EA
15	SANITARY SEWER SERVICE CLEANOUTS	1 EA
16	12" RCP CLASS III	48 LF
17	12" RCP CLASS III FES	2 EA
18	1.5" TYPE 'K' COPPER WATER SERVICE	56 LF
19	2X2X1.5 TAPPING TEE	1 EA
20	1.5" CURB STOP	1 EA
21	3/4" LP SERVICE LINE	60 LF
22	CLASS 'A' CRUSHED STONE	297 TN
23	ELECTRICAL SERVICE (SERVICE TO BUILDINGS ONLY)	1 LS
24	BLACK PVC COATED CHAIN LINK FENCING	244 LF
25	BLACK PVC COATED CHAIN LINK FENCING 16' SWING GATE	2 EA
26	OFFICE/SHOP BUILDING (INCLUDE MECHANICAL & ELECTRICAL ITEMS)	1 LS
27	LP TANK & PAD	1 LS
28	FUEL TANK & PAD	1 LS
29	NPDES GENERAL PERMIT #2	1 LS
30	CONSTRUCTION STAKING	1 LS
31	MOBILIZATION	1 LS
32	STORAGE BUILDING	1 LS

PROJECT DATA – OFFICE BUILDING

OCCUPANT LOAD:

GROUP B – BUSINESS
BUSINESS AREAS – 708 SF GROSS (IBC TABLE 1004.1.1)

GROUP S – STORAGE / ACCESSORY
MECHANICAL AREAS – 239 SF GROSS (IBC TABLE 1004.1.1)
GARAGE AREAS – 1,715 SF GROSS

BUSINESS 708 SF / 100 = 7.08 = 8 OCCUPANTS
ACCESSORY – MECH. 239 SF / 300 = .8 = 1 OCCUPANT
GARAGE – STORAGE 1,715 SF / 300 = 8.14 = 9 OCCUPANTS

TOTAL OCCUPANT LOAD = 18 OCCUPANTS

REQUIRED FIXTURES:

1 TOTAL WATER CLOSET (1 UNISEX)

WATER CLOSETS – 1 PER 25 FOR FIRST 50 = 1 REQUIRED / 1 PROVIDED
LAVATORIES – 1 PER 40 FOR FIRST 80 = 1 REQUIRED / 1 PROVIDED

MEANS OF EGRESS:

MIN. REQUIRED # EXITS = 2 EXITS PER LEVEL (IBC TABLE 1021.1)
MAX TRAVEL DISTANCE = 200' (IBC 1016.1)
DEAD-END CORRIDOR WIDTH = 20' MAX. (IBC 1018.4)
MIN. CORRIDOR WIDTH = 36" CLEAR
MIN. CLEAR OPENINGS FOR EXIT DOORS = 34" (ACTUAL 32")

FIRE EXTINGUISHERS:
THE NUMBER AND LOCATION OF FIRE EXTINGUISHERS TO BE DETERMINED BY THE FIRE MARSHALL PRIOR TO CERTIFICATE OF OCCUPANCY.

BUILDING:

ADDRESS: VIKING LAKE STATE PARK
1480 130TH STREET
CRESTON, IA 50801
UNION COUNTY
USE – OFFICE / STORAGE
BUILDING CONSTRUCTION – TYPE V-B (WITHOUT SPRINKLER SYSTEM)
NUMBER OF STORIES – 1 STORY
BUILDING HEIGHT – 22'-0"
BUILDING AREA – 2,970 NSF
BUILDING OCCUPANCY – GROUP B, BUSINESS & GROUP S-1, STORAGE

PROJECT DATA – STORAGE BUILDING

OCCUPANT LOAD:

GROUP S – STORAGE / ACCESSORY
STORAGE AREAS – 3,200 GROSS (IBC TABLE 1004.1.1)

STORAGE 3,200 SF / 300 = 10.67 = 11 OCCUPANTS

TOTAL OCCUPANT LOAD = 11 OCCUPANTS

FIRE EXTINGUISHERS:
THE NUMBER AND LOCATION OF FIRE EXTINGUISHERS TO BE DETERMINED BY THE FIRE MARSHALL PRIOR TO CERTIFICATE OF OCCUPANCY.

BUILDING:

USE – STORAGE
BUILDING CONSTRUCTION – TYPE V-B (WITHOUT SPRINKLER SYSTEM)
NUMBER OF STORIES – 1 STORY
BUILDING HEIGHT – 22'-0"
BUILDING AREA – 3,200 NSF
BUILDING OCCUPANCY – GROUP S-1, STORAGE

PROJECT DESCRIPTION

VIKING LAKE STATE PARK IS LOCATED JUST EAST OF STANTON, IOWA. THE PARK WILL RECEIVE A NEW OFFICE/SHOP AND STORAGE BUILDING AS SHOWN IN THE DOCUMENTS. THE OFFICE/SHOP WILL HAVE A GARAGE/STORAGE AREA WHICH WILL HAVE TWO IDENTICAL HEATED BAYS. THE OFFICE WILL HAVE ONE LARGE OPEN OFFICE SPACE, ONE STORAGE AREA, ONE RESTROOM, MECHANICAL ROOM AND A TWELVE PERSON CONFERENCE/BREAKROOM. THERE WILL BE A PAVED DRIVE INTO THE GARAGE BAYS AND A STORAGE YARD TO THE REAR OF THE BUILDING. THE PUBLIC ENTRY WILL HAVE A LARGE OVERHANG WITH A DECORATIVE HEAVY TIMBER TRUSS. CONTRACTOR SHALL ALSO DEMOLISH THE EXISTING SHOP AND OFFICE. THIS PROJECT WILL ALSO RECEIVE A 40' X 80' POST-FRAME STORAGE BUILDING.

AUTHORIZATION TO BID

ENGINEERING BUREAU CHIEF DATE

AUTHORIZED - PARKS | WILDLIFE | FISHERIES | LAW ENFORCEMENT DATE

DIRECTORY

OWNER		DISTRICT INSPECTOR	
COMPANY	IOWA DEPARTMENT OF NATURAL RESOURCES	COMPANY	IOWA DEPARTMENT OF NATURAL RESOURCES
ADDRESS	502 E. 9TH. ST.	ADDRESS	
CITY,STATE,ZIP	DES MOINES, IA 50319	CITY,STATE,ZIP	BRAYTON, IA
CONTACT	N/A	CONTACT	MARK JOHNSON
TELEPHONE	515.725.8200	TELEPHONE	515.250.3713
FAX	515.725.8202	FAX	–
EMAIL	N/A	EMAIL	MARK.JOHNSON@DNR.IOWA.GOV
ARCHITECT		**ELECTRICAL ENGINEER**	
COMPANY	IOWA DEPARTMENT OF NATURAL RESOURCES	COMPANY	KCL ENGINEERING
ADDRESS	502 E. 9TH. ST.	ADDRESS	218 1/2 5TH STREET
CITY,STATE,ZIP	DES MOINES, IA 50319	CITY,STATE,ZIP	WEST DES MOINES, IA 50265
CONTACT	RYAN RICHEY	CONTACT	JAMES DEEDS
TELEPHONE	515.979.0107	TELEPHONE	515-371-9970
FAX	–	FAX	–
EMAIL	RYAN.RICHEY@DNR.IOWA.GOV	EMAIL	JDEEDS@KCLENGINEERING.COM
CIVIL ENGINEER		**MECHANICAL ENGINEER**	
COMPANY	IOWA DEPARTMENT OF NATURAL RESOURCES	COMPANY	KCL ENGINEERING
ADDRESS	502 E. 9TH. ST.	ADDRESS	218 1/2 5TH STREET
CITY,STATE,ZIP	DES MOINES, IA 50319	CITY,STATE,ZIP	WEST DES MOINES, IA 50265
CONTACT	BRETT JOHNSON	CONTACT	CHAD BASS
TELEPHONE	515.250.3711	TELEPHONE	515-205-1397
FAX	–	FAX	–
EMAIL	BRETT.JOHNSON@DNR.IOWA.GOV	EMAIL	CBASS@KCLENGINEERING.COM
	–		–
	–		–
	–		–
	–		–
	–		–
	–		–
	–		–

CONSULTANT:

IOWA DEPARTMENT OF NATURAL RESOURCES
ENGINEERING SERVICES - WALLACE BUILING
502 E. 9TH ST., DES MOINES, IA 50319-0034
P: 515.725.8200
F: 515.725.8202

COVER SHEET

NEW OFFICE & STORAGE BUILDING FOR:
VIKING LAKE STATE PARK

2780 VIKING LAKE ROAD
STANTON, IA 51573

NO.	BY / DATE	REVISION

DRAWN BY:
PROJECT NUMBER: 17-04-69-02
CHK'D BY:
DATE: 10.24.2018
SHEET No: A-001

DIMENSION NOTES

1. IN INTERIOR SPACES THE ACTUAL DIMENSIONS MAY BE LESS IMPORTANT THAN IF AT TWO ELEMENTS IN THE BUILDING WERE TO BE EQUAL. IN THESE CASES, THE WORD "EQUAL OR EQ" IS USED IN LIEU OF THE ACTUAL DIMENSIONS.
2. WHEN A ROOM CENTERLINE IS INDICATED ONLY ONE SIDE OF THE ROOMS ELEMENTS MAY BE DIMENSIONED.
3. COLUMN IDENTIFICATION: DETAILS WILL GOVERN ALL DIMENSIONS AND NO DIMENSIONS WILL BE SHOWN ON SMALL SCALE PLANS.
4. PARTITION CENTERED ON COLUMN OR GRID LINES WILL NOT BE DIMENSIONED ON SMALL SCALE PLANS.
5. PARTITION WITH A FINISHED FACE FLUSH WITH FINISH FACE OF COLUMN WILL NOT be DIMENSIONED ON SMALL SCALE PLANS.
6. PARTITION FINISH FACE ON COLUMN OR GRID LINE WILL NOT BE DIMENSIONED ON SMALL SCALE PLANS .
7. WHEN ONE JAMB OCCURS AT A COLUMN OR GRID LINE NO DIMENSIONS WILL BE SHOWN ON THE SMALL SCALE PLANS. THE OPENING WIDTH WILL BE GOVERNED BY CRITERIA OR SCHEDULES.
8. WHEN NEITHER JAMB OCCURS AT A COLUMN OR GRID LINE ONE JAMB WILL BE DIMENSIONED.
9. DOOR LOCATIONS ARE TO BE LOCATED BY ONE OF FOLLOWING:
   a. ONE JAMB FACE LOCATED BY A PARTITION AT RIGHT ANGLE. 4"TYPICAL UNLESS INDICATED ON PLAN.
   b. OR AS DIMENSIONED ON PLAN.
10. PARTITIONS ARE DIMENSIONED TO FACE OF CMU OR FACE OF STUD UNLESS OTHERWISE NOTED.
11. DIMENSIONS ARE INDICATED IN THE DOCUMENTS. THE DRAWINGS SHALL NOT BE SCALED FOR DIMENSIONS.

MATERIAL LEGEND

EARTH
COMPACTED EARTH
GRASS
GRAVEL
CLAY
FENCE
TURF BLOCK
PAVERS
CONCRETE MASONRY UNIT
METAL STUD
PARTICLE BOARD
PLYWOOD
BATT INSULATION
ACOUSTICAL CEILING TILE
PLASTIC
CARPET
GYPSUM / STUCCO
GROUT
TURF
FOAM INSULATION
RIGID INSULATION
ALUMINUM
STEEL
FINISHED WOOD
MASONRY
CONCRETE
CRUSHED STONE/SAND
CAST STONE/STONE
STONE
GLASS
WOOD BLOCKING
CONTINUOUS WOOD

SYMBOL LEGEND

NORTH AAROW

00 TITLE
SCALE: 0 = 0'-0"
DRAWING / DETAIL IDENTIFICATION

00 / A-000
SECTION REFERENCE

00 / A-000
DETAIL REFERENCE

00 / A-000
EXTERIOR ELEVATION

00/A-100
INTERIOR ELEVATION

ELEVATION : 0'-0"
DESCRIPTION1
ELEVATION TARGET

1 / A
COLUMN GRID

00 / A-000
00 / A-000
MATCH LINES

ROOM / 000
ROOM/SPACE IDENTIFICATION

100
DOOR TAG

00
WINDOW TAG

00
WALL TYPE REFERENCE
KEYNOTE NUMBER -NEW C.S.I. DIVISION/KEY

00
KEYNOTE – DEMOLITION

00
KEYNOTE – NEW/RENOVATION

00
KEYNOTE – FINISH/ACCESSORY

℄
PROPERTY LINE REFERENCE

℄
CENTER LINE REFERENCE

0"
LEVEL CHANGE REFERENCE

DETAIL CUT LINE

1
REVISION NUMBER AND CLOUD

GENERAL NOTES

THE FOLLOWING GENERAL NOTES SHALL PERTAIN TO THE ENTIRE SET OF CONTRACT DOCUMENTS

1. A GENERAL CONTRACTOR SHALL NOTE THAT THE ARCHITECTURAL DRAWINGS ARE ESTABLISHING A MINIMUM MATERIAL OR CONSTRUCTION METHOD STANDARD. THE GENERAL CONTRACTOR SHALL PROVIDE A BID PRICE BASED ON THE SPECIFIC MATERIALS NOTED.
2. DO NOT SCALE DRAWINGS. IF DIMENSIONS ARE IN QUESTION, THE CONTRACTOR SHALL BE RESPONSIBLE FOR OBTAINING CLARIFICATION FROM THE ARCHITECT BEFORE CONTINUING WITH CONSTRUCTION.
3. GENERAL CONTRACTOR AND SUBCONTRACTORS SHALL PERFORM THEIR WORK IN ACCORDANCE WITH ALL APPLICABLE CODES GOVERNING EACH TRADE.
4. THE CONTRACTOR SHALL MAINTAIN A CLEAN AND ORGANIZED JOB SITE, ACCEPTABLE TO THE OWNER.
5. THE CONTRACTOR SHALL COORDINATE THE SEQUENCE OF WORK WITH THE OWNER REPRESENTATIVE.
6. THERE SHALL BE NO DEVIATION BY THE GENERAL CONTRACTOR FROM THE CONSTRUCTION DOCUMENTS UNLESS APPROVED IN WRITING BY THE ARCHITECT.
7. EACH CONTRACTOR SHALL VERIFY EXISTING CONDITIONS IN THE FIELD PRIOR TO THE INITIATION OF WORK AND SHALL NOTIFY THE ARCHITECT OF ANY DISCREPANCIES OR CONDITIONS INTERFERING WITH THE ABILITY OF THE CONTRACTOR TO COMPLETE WORK AS OUTLINED ON THE CONSTRUCTION DRAWINGS.
8. ALL CONTRACTORS ARE REQUIRED TO COORDINATE THEIR WORK WITH OTHER TRADES. LACK OF THIS COORDINATION RESULTING IN ADDED COST TO THE CONTRACT WILL BE BORNE BY THE CONTRACTOR.
9. GENERAL CONTRACTOR SHALL BE RESPONSIBLE FOR KEEPING THE BUILDING WATER TIGHT DURING CONSTRUCTION.
10. THE CONTRACTOR WILL VERIFY THAT EXIT EGRESS IS MAINTAINED FOR ALL OCCUPIED AREAS OF THE BUILDING THROUGHOUT ALL PHASES OF CONSTRUCTION.
11. PLAN DIMENSIONS ARE GIVEN TO FACE OF STUD OR BLOCK WALL. "CLEAR" DIMENSIONS ARE GIVEN TO THE FACE
12. THE OWNER WILL ASSUME ALL LIABILITY AND SHALL TAKE PERSONAL RESPONSIBILITY FOR ANY DECISIONS THAT THEY MAKE TO CHANGE OR ALTER THE CONSTRUCTION DOCUMENTS WITHOUT THE ARCHITECT'S WRITTEN APPROVAL.
13. PROTECT ALL EXISTING FINISHES AND MATERIALS TO REMAIN, IN ACCORDANCE WITH ACCEPTABLE TRADE PRACTICES, MANUFACTURER, RECOMMENDATIONS, OR AS DIRECTED BY THE ARCHITECT.
14. CUTTING OF EXISTING CONSTRUCTION FOR THE INSTALLATION OF ALL NEW WORK BY ALL TRADES, AND THE SUBSEQUENT PATCHING THEREOF, SHALL BE THE RESPONSIBILITY OF THE GENERAL CONTRACTOR, WHETHER THE WORK IS DONE BY HIS OWN FORCES OR NOT. GRINDING OF MATERIALS FOR REMOVAL SHALL NOT BE PERMITTED. CUTTING SHALL BE TO STRAIGHT LINE. UNWORKMAN-LIKE CUTTING, DAMAGE RESULTING THEREFROM AND UNACCEPTABLE PATCHING SHALL BE REPAIRED AND/OR REPLACED TO AN ACCEPTABLE CONDITION APPROVED BY THE ARCHITECT. A OWNER PROJECT REPRESENTATIVE SHALL BE NOTIFIED PRIOR TO CUTTING OF ANY STRUCTURAL ITEM (I.E. CONCRETE FLOOR, MASONRY, WALL, ETC.) WITHIN THE EXISTING BUILDING. METHOD OF CUTTING SHALL BE APPROVED BY THE OWNER PROJECT REPRESENTATIVE.
15. PATCHING MATERIAL SHALL MATCH EXISTING ADJACENT MATERIALS AS CLOSELY AS POSSIBLE IN COLOR, PATTERNS, AND/OR TEXTURES.
16. ALL SALVAGE MATERIALS REMOVED SHALL REMAIN THE PROPERTY OF THE OWNER. ALL NON-SALVAGE CONSTRUCTION MATERIALS AND DEBRIS FROM DEMOLITION WORK SHALL BE REMOVED FROM THE SITE AS WORK PROGRESSES, UNLESS OTHERWISE NOTED.
17. ISOLATE ALL DISSIMILAR METALS. CONTRACTOR SHALL REQUEST APPROVAL BY THE ARCHITECT FOR MATERIALS USED FOR THIS PURPOSE, PRIOR TO INSTALLATION.
18. SEALANTS SHALL BE COMPATIBLE WITH ADJACENT SURFACE(S) THAT ARE IN CONTACT. REFER TO SPECIFICATIONS FOR APPROVED MANUFACTURERS AND PROCEDURES.
19. CAULK JOINTS WHICH ARE EXPOSED SHALL BE SIMILAR COLORS TO ADJACENT MATERIALS AS REQUIRED BY THE ARCHITECT.
20. ALL DOOR HARDWARE TO BE ADA COMPLIANT AS SPECIFIED.
21. NO CONSTRUCTION SHALL OCCUR WITHOUT SHOP DRAWING APPROVAL. SHOP DRAWINGS TO BE PROVIDED TO ARCHITECT FOR REVIEW UPON BEING REVIEWED AND SIGNED/DATED BY THE GENERAL CONTRACTOR AND SHALL INCLUDE BUT NOT BE LIMITED TO THE FOLLOWING ITEMS:
   - BUILDING DRAWINGS
   - CABINETRY MILLWORK
   - RUNNING TRIM AND CASING PROFILES
   - PAINT/LAMINATE COLOR SAMPLES
   - ACOUSTICAL CEILING AND GRID
   - TOILET ACCESSORIES
   - KITCHEN EQUIPMENT
   - ROOF PENETRATIONS
   - HVAC EQUIPMENT
   - PLUMBING EQUIPMENT AND FIXTURES
   - ELECTRICAL EQUIPMENT AND FIXTURES
22. PRIOR TO COMMENCING WORK, THE CONTRACTOR SHALL SUBMIT COPIES OF MATERIAL SAFETY DATA SHEETS (MSDS) FOR ALL PRODUCTS USED TO PERFORM THE WORK.

ABBREVIATIONS

ABV	ABOVE
AFF	ABOVE FINISH FLOOR
ACT	ACOUSTICAL CEILING TILE
AHU	AIR HANDLER UNIT
AL	ALUMINUM
AB	ANCHOR BOLT
@	AT
BM	BEAM
BRG	BEARING
BLK	BLOCK
BD	BOARD
BTM	BOTTOM
BLDG	BUILDING
BUR	BUILT-UP ROOF
CAB	CABINET
CPT	CARPET
CF	CEILING FINISH
CIP	CAST IN PLACE
CLG	CEILING
CL	CENTER LINE
CT	CERAMIC TILE
CLR	CLEAR
COL	COLUMN
CONC	CONCRETE
CMU	CONCRETE MASONRY UNIT
CONT	CONTINUOUS
CJ	CONTROL JOINT
DIA	DIAMETER
DEMO	DEMOLITION
DR	DOOR
DN	DOWN
DS	DOWNSPOUT
DWG	DRAWINGS
ELEC	ELECTRICAL
EWC	ELECTRIC WATER COOLER
ELEV	ELEVATION
EQ	EQUAL
EXIST	EXISTING
EJ	EXPANSION JOINT
EXT	EXTERIOR
FIN	FINISH
FV	FIELD VERIFY
FE	FIRE EXTINGUISHER
FLR	FLOOR
FD	FLOOR DRAIN
FTG	FOOTING
FR	FIRE RETARDANT
GA	GAUGE
GC	GENERAL CONTRACTOR
GALV	GALVANIZED
GFI	GROUND FAULT INTERRUPT
GYP	GYPSUM
HC	HANDICAPPED
HDW	HARDWARE
HT	HEIGHT
HDR	HEADER
HM	HOLLOW METAL
IC	INSTALLED BY CONTRACTOR
IO	INSTALLED BY OWNER
INSUL	INSULATION
INT	INTERIOR
JAN	JANITOR
JT	JOINT
LAM	LAMINATED
LF	LINEAR FEET
MANUF	MANUFACTURER
MAX	MAXIMUM
MO	MASONRY OPENING
MECH	MECHANICAL
MEMB	MEMBRANE
MTL	METAL
MIN	MINIMUM
N/A	NOT APPLICABLE
NIC	NOT IN CONTRACT
NTS	NOT TO SCALE
#, NO	NUMBER
OA	OVERALL
OC	ON CENTER
OCC	OCCUPANCY
OPNG	OPENING
OPP	OPPOSITE
OH	OVERHANG
PAV	PAVERS
PNT	PAINTED
PR	PAIR
PBO	PURCHASED BY OWNER
PF	PRE-FINISHED/PRIMED
PL	PLATE
PLMB	PLUMBING
PLYWD	PLYWOOD
PT	PRESSURE TREATED
POR	POINT OF REFERENCE
QT	QUARRY TILE
R	RADIUS
RCP	REFLECTED CEILING PLAN
REINF	REINFORCED
RENO	RENOVATION
REQ'D	REQUIRED
RD	ROOF DRAIN
RM	ROOM
RO	ROUGH OPENING
S	STAIN
SECT	SECTION
SIM	SIMILAR
SC	SOLID CORE
ST	STUCCO
SPEC	SPECIFICATION
SF	SQUARE FOOT
SS	STAINLESS STEEL
STL	STEEL
STRUCT	STRUCTURAL
STD	STANDARD
TR	TRUSS
TG	TEMPERED GLASS
TEXT	TEXTURED
TYP	TYPICAL
T&G	TONGUE & GROOVE
T&B	TOP & BOTTOM
UL	UNDERWRITERS LAB
UNO	UNLESS NOTED OTHERWISE
VP	VAPOR BARRIER
VB	VINYL BASE
VCT	VINYL COMPOSITION-TILE
VWC	VINYL WALL COVERING
WC	WATER COOLER
WH	WATER HEATER
WWF	WELDED WIRE FABRIC
WD	WOOD
W/	WITH
W/O	WITHOUT

WALLTYPES

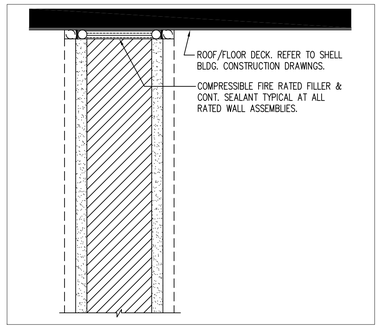

B FIRE RATED WALL HEADER/SILL DETAIL

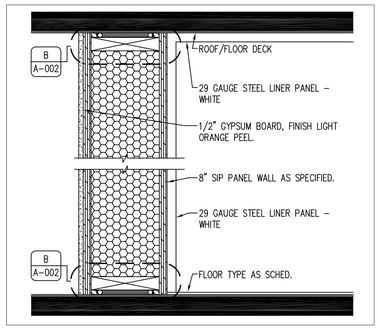

06 NON-RATED/LOAD BEARING
8 1/4" S.I.P. PANELS EXTERIOR WALL

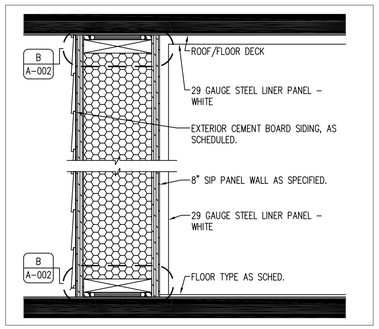

05 NON-RATED/LOAD BEARING
8 1/4" S.I.P. PANELS EXTERIOR WALL

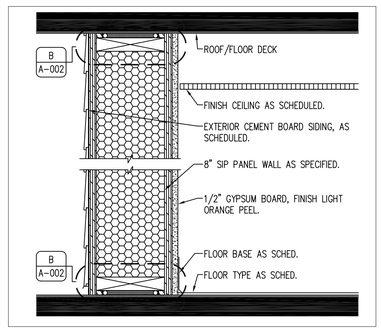

04 NON-RATED/LOAD BEARING
8 1/4" S.I.P. PANELS EXTERIOR WALL

WALLTYPES

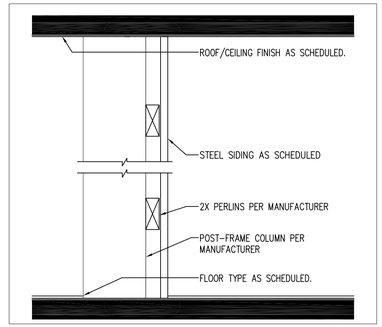

07 NON-RATED/LOAD BEARING
POST-FRAME STRUCTURE

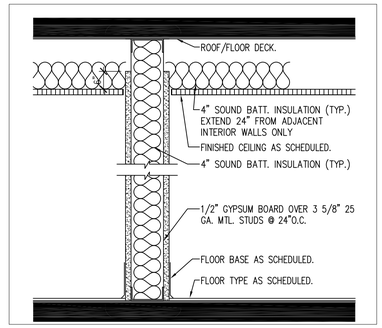

03 NON-RATED/NON-BEARING
3 5/8" MTL. STUD INTERIOR WALL

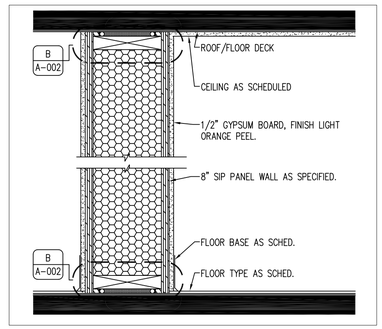

02 NON-RATED/LOAD BEARING
8 1/4" S.I.P. PANELS INTERIOR WALL

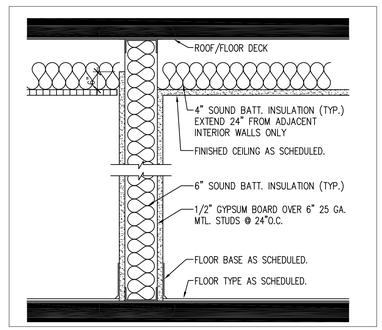

01 NON-RATED/NON-BEARING
6" MTL. STUD WET WALL

CONSULTANT:

IOWA DEPARTMENT OF NATURAL RESOURCES
ENGINEERING SERVICES - WALLACE BUILING
502 E. 9TH ST., DES MOINES, IA 50319-0034
P: 515.725.8200
F: 515.725.8202

WALL TYPES, NOTES & SYMBOLS

NEW OFFICE & STORAGE BUILDING FOR:
VIKING LAKE STATE PARK
2780 VIKING LAKE ROAD
STANTON, IA 51573

NO.	BY DATE	REVISION

DRAWN BY:
PROJECT NUMBER: 17-04-69-02
CHK'D BY:
DATE: 10.24.2018
SHEET No: **A-002**

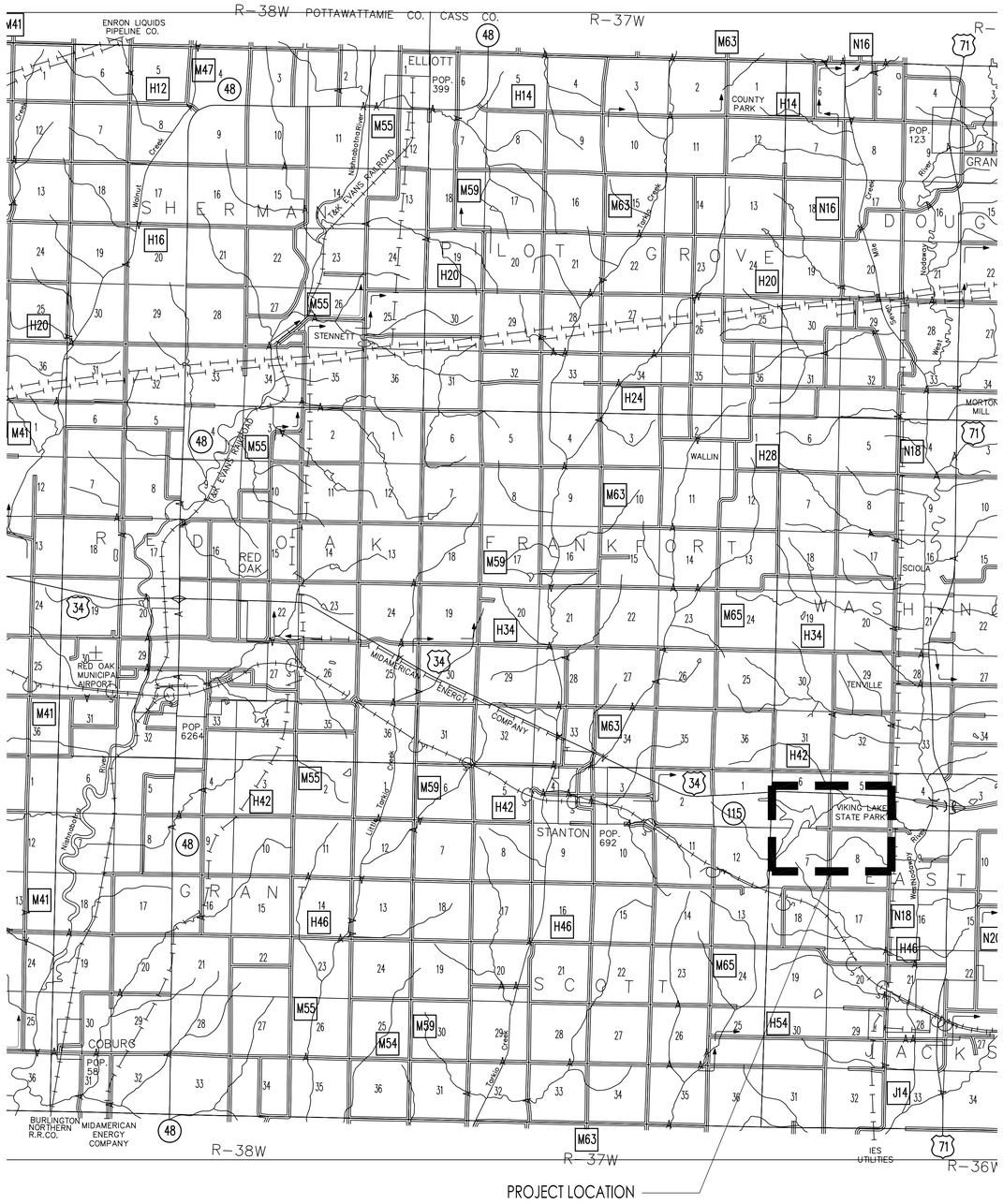

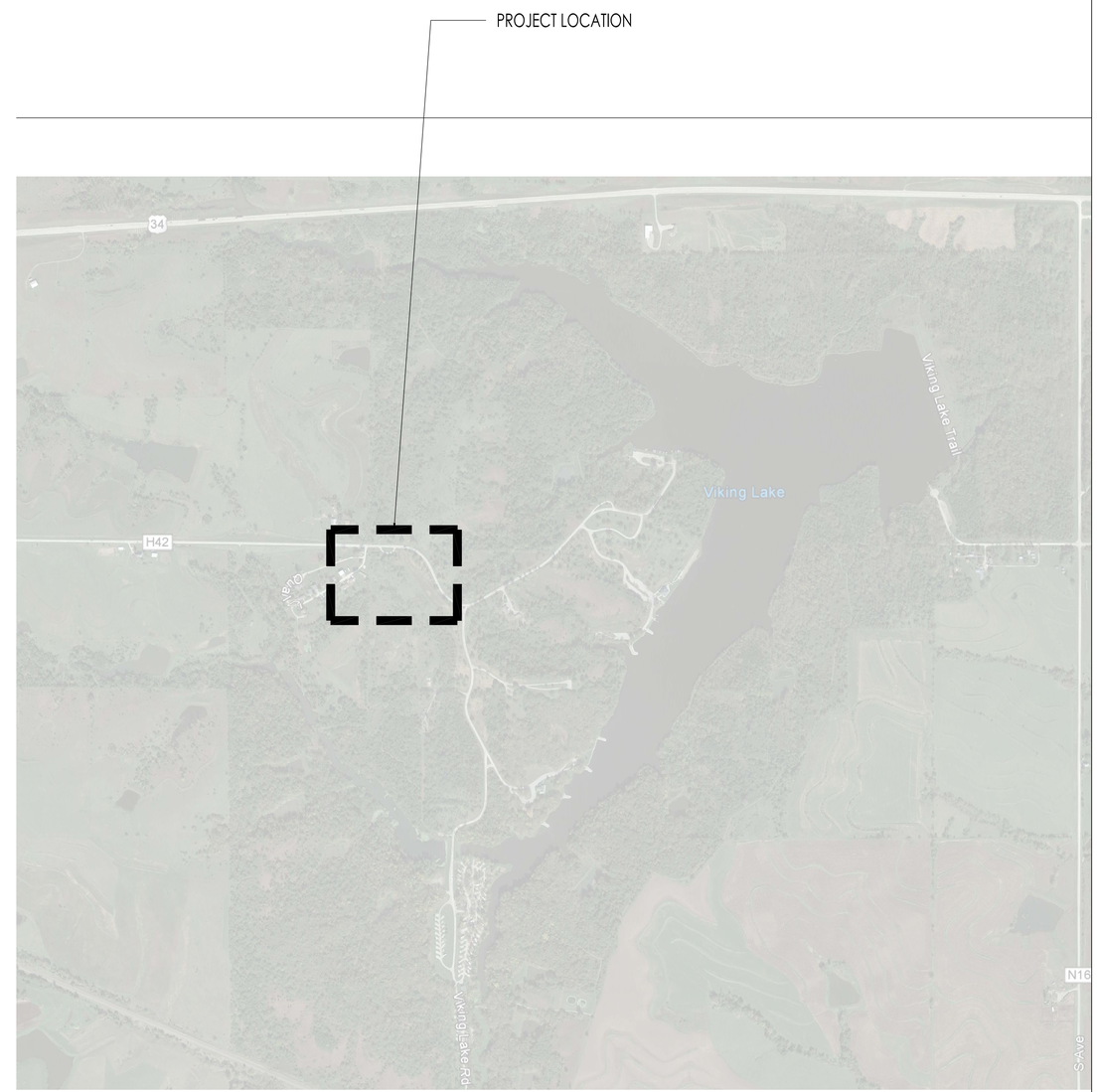

CONSULTANT:

IOWA DEPARTMENT OF NATURAL RESOURCES

ENGINEERING SERVICES - WALLACE BUILING
502 E. 9TH ST., DES MOINES, IA 50319-0034
P: 515.725.8200
F: 515.725.8202

PROJECT LOCATION

NEW OFFICE & STORAGE BUILDING FOR:

VIKING LAKE STATE PARK

STANTON, IA 51573

2780 VIKING LAKE ROAD

NO.	BY / DATE	REVISION

DRAWN BY:

PROJECT NUMBER: 17-04-69-02

CHK'D BY:

DATE: 10.24.2018

SHEET No:

A-003

LEGEND
EXISTING/PROPOSED

S 6"	SANITARY SEWER
W 2"	WATER MAIN
ST 8"	STORM SEWER
E	ELECTRICAL LINE
990 990	ELEVATION
882.67 884.50	SPOT ELEVATION
	TREES
	8" FILTER SOCK
	CLEARING LIMITS

N

0 20
FEET

SURVEY CONTROL POINTS

SURVEY CONTROL POINT #900		SURVEY CONTROL POINT #903	
N:	358279.9880	N:	358325.9950
E:	1213500.7520	E:	1213690.4660
ELEV:	1250.503	ELEV:	1251.700
PK NAIL IN ASPHALT		12-INCH NAIL	

SURVEY CONTROL NOTES

1. SURVEY CONTROL POINT #900 IS LOCATED WITHIN THE DEMOLITION LIMITS (PART OF EXISTING ASPHALT BEING REMOVED). ADDITIONAL CONTROL POINTS MAY NEED TO BE SET BY THE SURVEYOR BECAUSE OF THIS.

CONSULTANT:

IOWA DEPARTMENT OF NATURAL RESOURCES
ENGINEERING SERVICES - WALLACE BUILING
502 E. 9TH ST., DES MOINES, IA 50319-0034
P: 515.725.8200
F: 515.725.8202

SURVEY CONTROL

NEW OFFICE & STORAGE BUILDING FOR:

VIKING LAKE STATE PARK

2780 VIKING LAKE ROAD STANTON, IA 51573

NO.	BY DATE	REVISION

DRAWN BY:
PROJECT NUMBER: 17-04-69-02
CHK'D BY:
DATE: 10.24.2018
SHEET No: C1

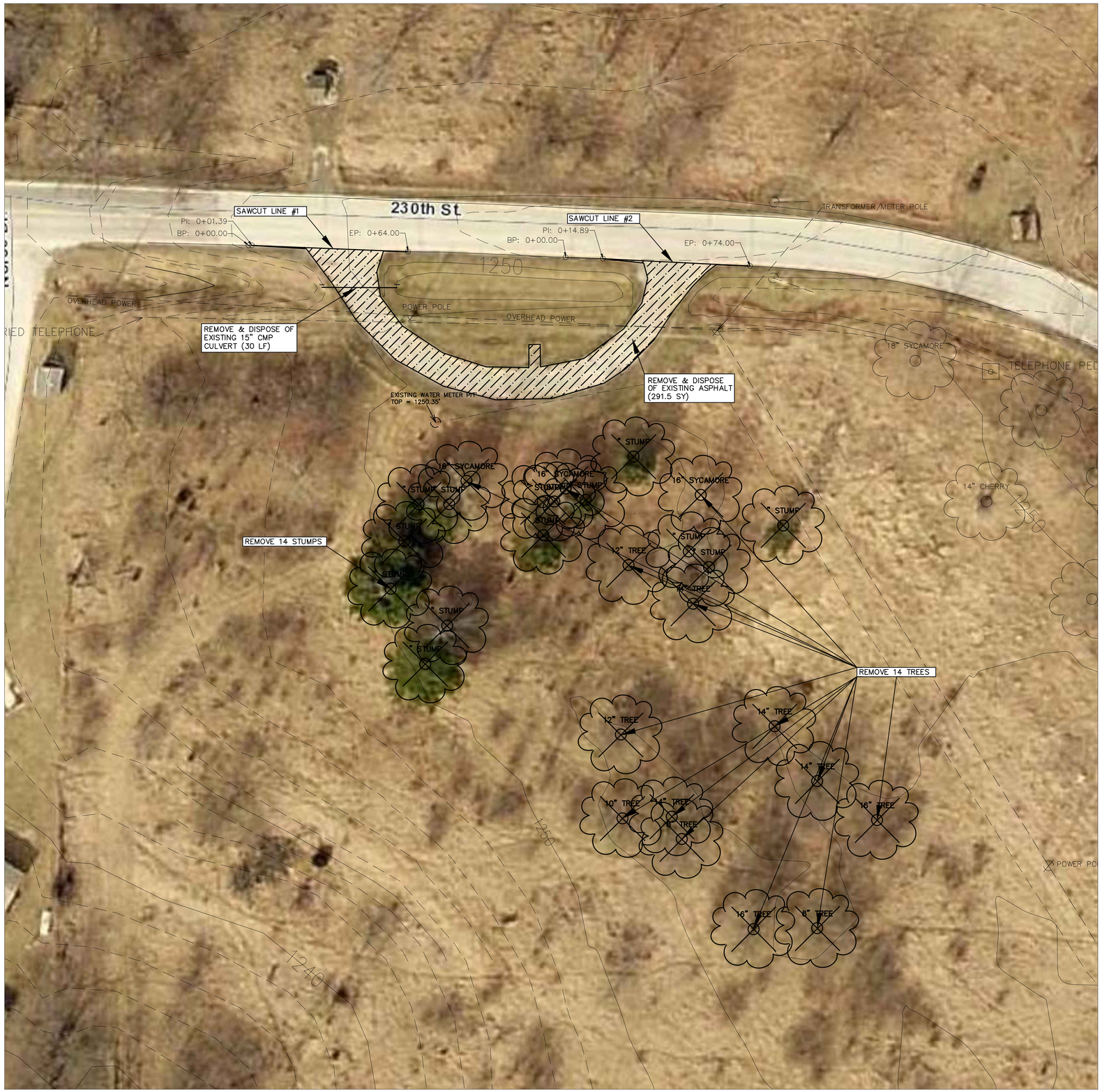

CLEARING & GRUBBING NOTES

1. CONTRACTOR TO CLEAR AND GRUB THE CONSTRUCTION PROJECT SITE AND INCLUDES THE REMOVAL OF 14 TREE STUMPS AND 14 TREES:
   - (2) 8–INCH DIAMETER TREE
   - (1) 10–INCH DIAMETER TREE
   - (2) 12–INCH DIAMETER TREES
   - (4) 14–INCH DIAMETER TREES
   - (5) 16–INCH DIAMETER TREES
2. CONTRACTOR TO REMOVE TREES AND STUMPS, INCLUDING ROOTS, TO A DEPTH OF AT LEAST 12–INCHES IN ACCORDANCE WITH SUDAS SECTION 2010.3.01.C. PLACE BACKFILL TO FILL HOLE AND COMPACT. REMOVED TREES & STUMPS CAN BE PLACED IN THE EXISTING BRUSH PILE APPROXIMATELY 1,000' TO THE SOUTH.
3. CONTRACTOR TO REMOVE AND DISPOSE OF EXISTING CMP CULVERT (15–INCH DIAMETER ASSUMED). TO BE INCLUDED IN TREE CLEARING AND GRUBBING BID ITEM.
4. CONTRACTOR TO DISPOSE OF MATERIAL OFF–SITE PROPERLY.

DEMOLITION NOTES

1. CONTRACTOR TO REMOVE AND DISPOSE OF EXISTING ASPHALT LOOP DRIVE (291.5 SY).
2. SURVEY CONTROL POINT #900 IS LOCATED WITHIN THE DEMOLITION LIMITS (PART OF EXISTING ASPHALT BEING REMOVED). ADDITIONAL CONTROL POINTS MAY NEED TO BE SET BY THE SURVEYOR BECAUSE OF THIS.
3. PROVIDE TRAFFIC CONTROL AS NEEDED FOR DEMOLITION OF THE EXISTING PAVEMENT. LANE CLOSURES ARE ONLY ALLOWED BETWEEN MONDAYS AND THURSDAYS.

SAW CUT LINE CONTROL

1. CONTRACTOR TO SAW CUT FULL DEPTH EXISTING ASPHALT FOR CLEAN EDGE FOR PROPOSED PCC PAVING (138 LF).

SAW CUT #1 ALIGNMENT						
No.	Type	Length	Direction	Start Station	End Station	Start Point	End Point
1	Line	1.39'	S88° 29' 12"E	0+00.00'	0+01.39'	{1213384.4119',358324.6087'}	{1213385.8000',358324.5720'}
2	Line	62.61'	S87° 43' 16"E	0+01.39'	0+64.00'	{1213385.8000',358324.5720'}	{1213448.3620',358322.0825'}
SAW CUT #2 ALIGNMENT							
No.	Type	Length	Direction	Start Station	End Station	Start Point	End Point
1	Line	14.89'	S87° 49' 19"E	0+00.00'	0+14.89'	{1213511.5108',358319.7920'}	{1213526.3930',358319.2260'}
2	Line	59.11'	S87° 05' 18"E	0+14.89'	0+74.00'	{1213526.3930',358319.2260'}	{1213585.4250',358316.2234'}

N

0 FEET 20

LEGEND

EXISTING/PROPOSED

- S 6" — SANITARY SEWER
- W 2" — WATER MAIN
- ST 8" — STORM SEWER
- E — ELECTRICAL LINE
- 990 990 — ELEVATION
- 882.67 884.50 — SPOT ELEVATION
- TREES
- DIA. CONNECTICUT — TREE TO BE REMOVED
- ASPHALT DEMOLITION

CONSULTANT:

IOWA DEPARTMENT OF NATURAL RESOURCES
ENGINEERING SERVICES - WALLACE BUILING
502 E. 9TH ST., DES MOINES, IA 50319-0034
P: 515.725.8200
F: 515.725.8202

DEMOLITION PLAN

NEW OFFICE & STORAGE BUILDING FOR:

VIKING LAKE STATE PARK

2780 VIKING LAKE ROAD STANTON, IA 51573

NO.	BY DATE	REVISION

DRAWN BY:
PROJECT NUMBER: 17–04–69–02
CHK'D BY:
DATE: 10.24.2018
SHEET No: C2

LEGEND
EXISTING/PROPOSED

- S 6" — SANITARY SEWER
- W 2" — WATER MAIN
- ST 8" — STORM SEWER
- E — ELECTRICAL LINE
- TREES

0 20 FEET

GENERAL NOTES

1. TWO WEEKS PRIOR TO CONSTRUCTION THE CONTRACTOR SHALL NOTIFY:
   A. IOWA DNR PROJECT MANAGER: RYAN RICHEY 515-979-0107
   B. DISTRICT INSPECTOR: MARK JOHNSON 515-250-3713
2. ALL CONSTRUCTION SHALL BE IN ACCORDANCE WITH STATEWIDE URBAN STANDARD DESIGN SPECIFICATIONS FOR PUBLIC IMPROVEMENTS (SUDAS). ALL CONSTRUCTION TESTING TO BE IN ACCORDANCE WITH SUDAS AND IS THE EXPENSE OF THE CONTRACTORS.
3. THE CONTRACTOR SHALL VERIFY THE EXISTING CONDITIONS PRIOR TO THE START OF CONSTRUCTION AND NOTIFY THE ABOVE MENTIONED CONTACTS OF ANY DISCREPANCIES.
4. THE LOCATIONS AND DIMENSIONS SHOWN ON THE PLANS FOR EXISTING FACILITIES ARE IN ACCORDANCE WITH AVAILABLE INFORMATION WITHOUT UNCOVERING AND MEASURING. THE ENGINEER DOES NOT GUARANTEE THE ACCURACY OF THIS INFORMATION OR THAT ALL EXISTING UNDERGROUND FACILITIES ARE SHOWN. IT IS THE RESPONSIBILITY OF THE CONTRACTOR TO CONTACT ALL PUBLIC AND/OR PRIVATE UTILITIES SERVING THE AREA TO DETERMINE THE PRESENT EXTENT AND LOCATION OF THEIR FACILITIES BEFORE BEGINNING WORK.
5. THE CONTRACTOR IS REQUIRED TO TAKE DUE PRECAUTIONARY MEASURES TO PROTECT THE UTILITIES OR STRUCTURES AT THE SITE. IT SHALL BE THE CONTRACTOR'S RESPONSIBILITY TO NOTIFY THE PROPER UTILITY IMMEDIATELY UPON BREAKING OR DAMAGE TO ANY UTILITY LINE OR APPURTENANCE, OR THE INTERRUPTION OF THEIR SERVICE. HE SHALL NOTIFY THE PROPER UTILITY INVOLVED. IF EXISTING UTILITY LINES ARE ENCOUNTERED THAT CONFLICT IN LOCATION WITH NEW CONSTRUCTION, THE CONTRACTOR SHALL NOTIFY THE ENGINEER SO THAT THE CONFLICT CAN BE RESOLVED.
6. CONTRACTOR TO PROTECT ALL UTILITY, PAVING, BUILDINGS, ETC. OUTSIDE OF LIMITS OF PROPOSED CONSTRUCTION.
7. IN THE EVENT THAT THERE IS A DISCREPANCY BETWEEN THE QUANTITIES AND THE PLANS, THE DETAILED PLANS SHALL GOVERN.
8. CONTRACTOR SHALL SEED/MULCH ALL DISTURBED AREAS. USE TYPE 1 (PERMANENT LAWN MIXTURE) SEED MIX.
9. MAINTAIN ALL CUT AND FILL AREAS TO ACCOMMODATE SURFACE DRAINAGE.
10. FINISHED GRADE ON ALL NON-PAVED AREAS SHALL BE WITHIN 0.20 FOOT OF PLAN GRADE. PAVED AREAS SHALL BE WITHIN 0.10 FOOT.
11. TOPSOIL SHALL BE SPREAD TO A MINIMUM THICKNESS OF 6-INCHES ON ALL DISTURBED UNPAVED AREAS.
12. BACKFILL TO THE TOP OF ALL ROCK OR PAVED SURFACES.
13. ALL ELEVATIONS ARE TO THE GUTTER GRADE UNLESS NOTED OTHERWISE.
14. PROTECT ALL EXISTING TREES AND VEGETATION UNLESS OTHERWISE NOTED.
15. ANY SPOIL MATERIAL THAT MAY BE GENERATED DURING THE CONSTRUCTION, COORDINATE LOCATION FOR DISPOSITION WITH THE DNR INSPECTOR AND IS CONSIDERED INCIDENTAL TO THE PROJECT. THE AREA WEST OF THE PROPOSED BUILDING CAN BE USED AS A POSSIBLE LOCATION FOR ANY SPOIL MATERIAL. FINISHED GRADES SHOULD HAVE A MINIMUM SLOPE OF 2% AWAY FROM THE PROPOSED BUILDING. ANOTHER SPOIL AREA CAN BE SOUTHWEST OF THE LATERAL FIELD.
16. INSTALL 244 LINEAL FEET OF 6' HEIGHT, BLACK PVC COATED CHAIN LINK FENCING AND (2) 16-FOOT SWING GATES IN ACCORDANCE WITH SUDAS SECTION 9060. SEE FENCING DETAILS ON SHEET C8.
17. INSTALL 297 TONS OF CLASS 'A' CRUSHED STONE FOR THE 6-INCH DEPTH STORAGE YARD AREA.
18. THE CONCRETE PAVEMENT FOR THE DRIVE AISLES, PARKING AND SIDEWALKS WILL BE HANDLED UNDER A SEPARATE CONTRACT. CONTRACTOR SHALL COORDINATE CONSTRUCTION ACTIVITIES WITH THE PAVING CONTRACTOR. PAVING CONSTRUCTION IS PROJECTED TO OCCUR IN JUNE, 2019.

EDGE OF FUTURE CONCRETE ALIGNMENT (SEPARATE CONSTRUCTION CONTRACT)

No.	Type	Length	Radius	Direction	Start Station	End Station	Delta angle	Chord length	Chord Direction	Start Point	End Point	Center Point
1	Line	2.00'		S2° 54' 42"W	0+00.00'	0+02.00'				{1213585.4250',358316.2234'}	{1213585.3234',358314.2260'}	
2	Curve	39.27'	25.00'		0+02.00'	0+41.27'	90.0000 (d)	35.36'	S47° 54' 42"W	{1213585.3234',358314.2260'}	{1213559.0857',358290.5282'}	{1213584.0534',358289.2583'}
3	Line	30.05'		S2° 54' 42"W	0+41.27'	0+71.32'				{1213559.0857',358290.5282'}	{1213557.5593',358260.5191'}	
4	Curve	7.17'	25.00'		0+71.32'	0+78.49'	16.4301 (d)	7.14'	S11° 07' 37"W	{1213557.5593',358260.5191'}	{1213556.1806',358253.5089'}	{1213532.5916',358261.7890'}
5	Curve	16.61'	25.00'		0+78.49'	0+95.10'	38.0677 (d)	16.31'	S0° 18' 29"W	{1213556.1806',358253.5089'}	{1213556.0929',358237.2028'}	{1213579.7696',358245.2288'}
6	Line	72.00'		S18° 43' 33"E	0+95.10'	1+67.10'				{1213556.0929',358237.2028'}	{1213579.2078',358169.0141'}	
7	Line	14.00'		S71° 16' 27"W	1+67.10'	1+81.10'				{1213579.2078',358169.0141'}	{1213565.9488',358164.5195'}	
8	Line	72.00'		N18° 43' 33"W	1+81.10'	2+53.10'				{1213565.9488',358164.5195'}	{1213542.8340',358232.7083'}	
9	Curve	7.85'	5.00'		2+53.10'	2+60.95'	90.0000 (d)	7.07'	N63° 43' 33"W	{1213542.8340',358232.7083'}	{1213536.4935',358235.8384'}	{1213538.0987',358231.1031'}
10	Line	23.83'		S71° 16' 27"W	2+60.95'	2+84.78'				{1213536.4935',358235.8384'}	{1213513.9217',358228.1870'}	
11	Curve	7.85'	5.00'		2+84.78'	2+92.64'	90.0000 (d)	7.07'	S26° 16' 27"W	{1213513.9217',358228.1870'}	{1213510.7916',358221.8464'}	{1213515.5269',358223.4516'}
12	Line	15.00'		S18° 43' 33"E	2+92.64'	3+07.64'				{1213510.7916',358221.8464'}	{1213515.6072',358207.6404'}	
13	Line	45.00'		S71° 16' 27"W	3+07.64'	3+52.64'				{1213515.6072',358207.6404'}	{1213472.9892',358193.1937'}	
14	Line	15.23'		N18° 43' 33"W	3+52.64'	3+67.87'				{1213472.9892',358193.1937'}	{1213468.0992',358207.6194'}	
15	Curve	7.39'	5.00'		3+67.87'	3+75.26'	84.6872 (d)	6.74'	N61° 04' 10"W	{1213468.0992',358207.6194'}	{1213462.2040',358210.8778'}	{1213463.3638',358206.0142'}
16	Curve	90.39'	49.00'		3+75.26'	4+65.65'	105.6918 (d)	78.11'	N50° 34' 02"W	{1213462.2040',358210.8778'}	{1213401.8763',358260.4895'}	{1213450.8375',358258.5412'}
17	Line	41.37'		N2° 16' 43"E	4+65.65'	5+07.02'				{1213401.8763',358260.4895'}	{1213403.5213',358301.8308'}	
18	Curve	31.42'	20.00'		5+07.02'	5+38.44'	90.0001 (d)	28.28'	N42° 43' 16"W	{1213403.5213',358301.8308'}	{1213384.3324',358322.6102'}	{1213383.5372',358302.6261'}
19	Line	2.00'		N2° 16' 44"E	5+38.44'	5+40.44'				{1213384.3324',358322.6102'}	{1213384.4119',358324.6087'}	
20	Line	1.39'		S88° 29' 12"E	5+40.44'	5+41.83'				{1213384.4119',358324.6087'}	{1213385.8000',358324.5720'}	
21	Line	62.61'		S87° 43' 16"E	5+41.83'	6+04.44'				{1213385.8000',358324.5720'}	{1213448.3620',358322.0825'}	
22	Line	2.00'		S2° 16' 44"W	6+04.44'	6+06.44'				{1213448.3620',358322.0825'}	{1213448.2825',358320.0841'}	
23	Curve	31.42'	20.00'		6+06.44'	6+37.86'	90.0000 (d)	28.28'	S47° 16' 44"W	{1213448.2825',358320.0841'}	{1213427.5031',358300.8951'}	{1213447.4873',358300.0999'}
24	Line	41.39'		S2° 16' 44"W	6+37.86'	6+79.25'				{1213427.5031',358300.8951'}	{1213425.8573',358259.5352'}	
25	Curve	22.47'	25.00'		6+79.25'	7+01.72'	51.4930 (d)	21.72'	S23° 28' 04"E	{1213425.8573',358259.5352'}	{1213434.5067',358239.6123'}	{1213450.8375',358258.5412'}
26	Curve	34.04'	20.00'		7+01.72'	7+35.75'	97.5060 (d)	30.07'	N82° 01' 58"E	{1213434.5067',358239.6123'}	{1213464.2914',358243.7809'}	{1213447.5713',358254.7554'}
27	Curve	16.58'	25.00'		7+35.75'	7+52.33'	37.9944 (d)	16.28'	N52° 16' 37"E	{1213464.2914',358243.7809'}	{1213477.1654',358253.7393'}	{1213485.1914',358230.0627'}
28	Line	50.00'		N71° 16' 27"E	7+52.33'	8+02.33'				{1213477.1654',358253.7393'}	{1213524.5187',358269.7913'}	
29	Curve	17.90'	15.00'		8+02.33'	8+20.23'	68.3624 (d)	16.85'	N37° 05' 35"E	{1213524.5187',358269.7913'}	{1213534.6837',358283.2353'}	{1213519.7031',358283.9973'}
30	Line	8.33'		N2° 54' 42"E	8+20.23'	8+28.56'				{1213534.6837',358283.2353'}	{1213535.1070',358291.5573'}	
31	Curve	39.27'	25.00'		8+28.56'	8+67.83'	89.9992 (d)	35.36'	N42° 05' 19"W	{1213535.1070',358291.5573'}	{1213511.4092',358317.7946'}	{1213510.1393',358292.8269'}
32	Line	2.00'		N2° 54' 42"E	8+67.83'	8+69.83'				{1213511.4092',358317.7946'}	{1213511.5108',358319.7920'}	

CONSULTANT:

IOWA DEPARTMENT OF NATURAL RESOURCES
ENGINEERING SERVICES - WALLACE BUILING
502 E. 9TH ST., DES MOINES, IA 50319-0034
P: 515.725.8200
F: 515.725.8202

DIMENSION PLAN

NEW OFFICE & STORAGE BUILDING FOR:

VIKING LAKE STATE PARK

2780 VIKING LAKE ROAD
STANTON, IA 51573

NO.	BY / DATE	REVISION

DRAWN BY:
PROJECT NUMBER: 17-04-69-02
CHK'D BY:
DATE: 10.24.2018
SHEET No: C3

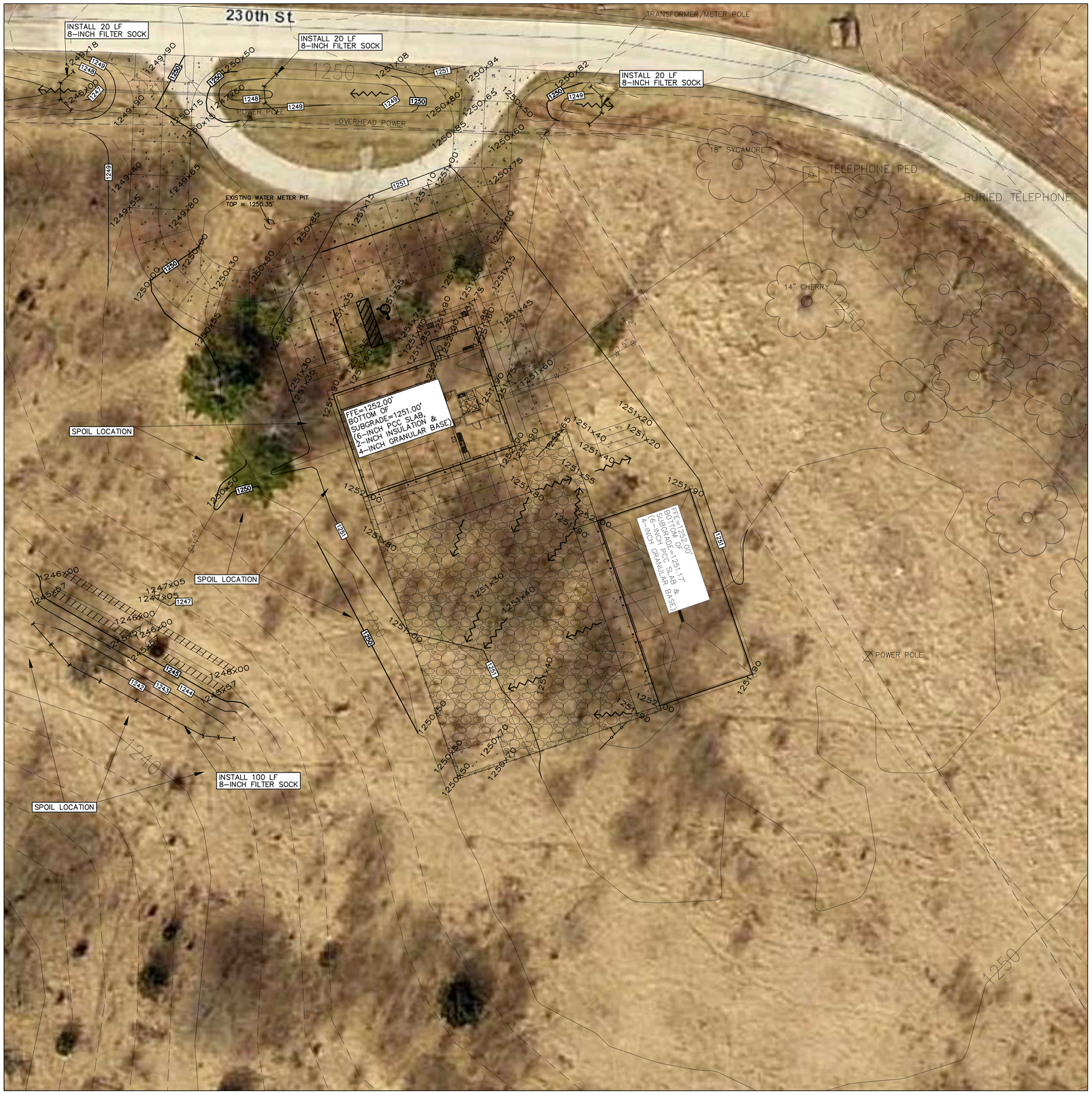

N

0 FEET 20

LEGEND
EXISTING/PROPOSED

S 6"	SANITARY SEWER
W 2"	WATER MAIN
ST 8"	STORM SEWER
E	ELECTRICAL LINE
990 990	ELEVATION
882.67 884.50	SPOT ELEVATION
	TREES
	8" FILTER SOCK
	DRAINAGE PATH

GRADING NOTES

1. TWO WEEKS PRIOR TO CONSTRUCTION THE CONTRACTOR SHALL NOTIFY:
   A. IOWA DNR PROJECT MANAGER: RYAN RICHEY 515-979-0107
   B. DISTRICT INSPECTOR: MARK JOHNSON 515-250-3713
2. ALL CONSTRUCTION SHALL BE IN ACCORDANCE WITH STATEWIDE URBAN STANDARD DESIGN SPECIFICATIONS FOR PUBLIC IMPROVEMENTS (SUDAS). ALL CONSTRUCTION TESTING TO BE IN ACCORDANCE WITH SUDAS AND IS THE EXPENSE OF THE CONTRACTORS.
3. THE CONTRACTOR SHALL VERIFY THE EXISTING CONDITIONS PRIOR TO THE START OF CONSTRUCTION AND NOTIFY THE ABOVE MENTIONED CONTACTS OF ANY DISCREPANCIES.
4. THE LOCATIONS AND DIMENSIONS SHOWN ON THE PLANS FOR EXISTING FACILITIES ARE IN ACCORDANCE WITH AVAILABLE INFORMATION WITHOUT UNCOVERING AND MEASURING. THE ENGINEER DOES NOT GUARANTEE THE ACCURACY OF THIS INFORMATION OR THAT ALL EXISTING UNDERGROUND FACILITIES ARE SHOWN. IT IS THE RESPONSIBILITY OF THE CONTRACTOR TO CONTACT ALL PUBLIC AND/OR PRIVATE UTILITIES SERVING THE AREA TO DETERMINE THE PRESENT EXTENT AND LOCATION OF THEIR FACILITIES BEFORE BEGINNING WORK.
5. THE CONTRACTOR IS REQUIRED TO TAKE DUE PRECAUTIONARY MEASURES TO PROTECT THE UTILITIES OR STRUCTURES AT THE SITE. IT SHALL BE THE CONTRACTOR'S RESPONSIBILITY TO NOTIFY THE PROPER UTILITY IMMEDIATELY UPON BREAKING OR DAMAGE TO ANY UTILITY LINE OR APPURTENANCE, OR THE INTERRUPTION OF THEIR SERVICE. HE SHALL NOTIFY THE PROPER UTILITY INVOLVED. IF EXISTING UTILITY LINES ARE ENCOUNTERED THAT CONFLICT IN LOCATION WITH NEW CONSTRUCTION, THE CONTRACTOR SHALL NOTIFY THE ENGINEER SO THAT THE CONFLICT CAN BE RESOLVED.
6. CONTRACTOR TO PROTECT ALL UTILITY, PAVING, BUILDINGS, ETC. OUTSIDE OF LIMITS OF PROPOSED CONSTRUCTION.
7. IN THE EVENT THAT THERE IS A DISCREPANCY BETWEEN THE QUANTITIES AND THE PLANS, THE DETAILED PLANS SHALL GOVERN.
8. CONTRACTOR SHALL SEED/MULCH ALL DISTURBED AREAS (APPROXIMATELY 1.5 ACRE, INCLUDING SPOIL AREAS). USE TYPE 1 (PERMANENT LAWN MIXTURE) SEED MIX.
9. MAINTAIN ALL CUT AND FILL AREAS TO ACCOMMODATE SURFACE DRAINAGE.
10. FINISHED GRADE ON ALL NON-PAVED AREAS SHALL BE WITHIN 0.20 FOOT OF PLAN GRADE. PAVED AREAS SHALL BE WITHIN 0.10 FOOT.
11. TOPSOIL SHALL BE SPREAD TO A MINIMUM THICKNESS OF 6-INCHES ON ALL DISTURBED UNPAVED AREAS.
12. BACKFILL TO THE TOP OF ALL ROCK OR PAVED SURFACES.
13. ALL ELEVATIONS ARE TO THE GUTTER GRADE UNLESS NOTED OTHERWISE.
14. EARTHWORK QUANTITY IS ROUGHLY 800 CY.
15. NPDES GENERAL PERMIT #2 WILL BE REQUIRED FOR THIS PROJECT AND IS THE RESPONSIBILITY OF THE CONTRACTOR TO OBTAIN AND TO INSPECT AND LOG.
16. ANY SPOIL MATERIAL THAT MAY BE GENERATED DURING THE CONSTRUCTION, COORDINATE LOCATION FOR DISPOSITION WITH THE DNR INSPECTOR AND IS CONSIDERED INCIDENTAL TO THE PROJECT. THE AREA WEST OF THE PROPOSED BUILDING CAN BE USED AS A POSSIBLE LOCATION FOR ANY SPOIL MATERIAL. FINISHED GRADES SHOULD HAVE A MINIMUM SLOPE OF 2% AWAY FROM THE PROPOSED BUILDING. ANOTHER SPOIL AREA CAN BE SOUTHWEST OF THE LATERAL FIELD.
17. IN AREAS WHERE PAVEMENT IS GOING TO BE INSTALLED BY A SEPARATE CONTRACT, GRADE TO TOP OF SUBGRADE (MINUS 1 FOOT: 6-INCH PCC & 6-INCH GRANULAR SUBBASE).

CONSULTANT:

IOWA DEPARTMENT OF NATURAL RESOURCES
ENGINEERING SERVICES - WALLACE BUILING
502 E. 9TH ST., DES MOINES, IA 50319-0034
P: 515.725.8200
F: 515.725.8202

GRADING PLAN

NEW OFFICE & STORAGE BUILDING FOR:

VIKING LAKE STATE PARK

2780 VIKING LAKE ROAD STANTON, IA 51573

NO.	BY / DATE	REVISION

DRAWN BY:
PROJECT NUMBER: 17-04-69-02
CHK'D BY:
DATE: 10.24.2018
SHEET No: C4

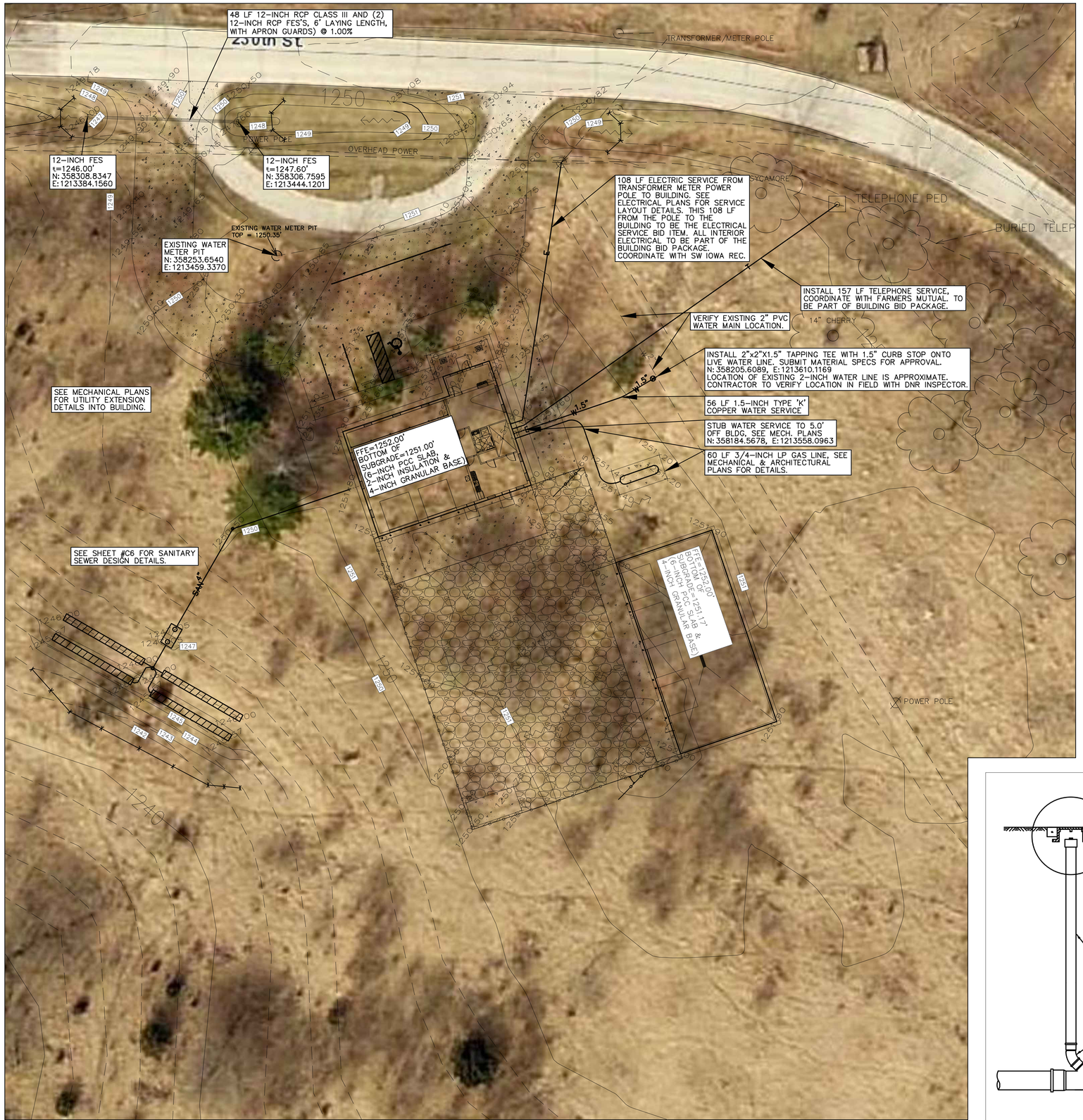

N

0 FEET 20

LEGEND
EXISTING/PROPOSED

S 6"	SANITARY SEWER
W 2"	WATER MAIN
ST 8"	STORM SEWER
E	ELECTRICAL LINE
990 990	ELEVATION
882.67 884.50	SPOT ELEVATION
	TREES
	8" FILTER SOCK

UTILITY NOTES

1. MAINTAIN A MINIMUM 4' COVER OVER WATER LINES.
2. PROVIDE THRUST BLOCKS AT ALL ABRUPT CHANGES IN DIRECTION FOR WATER APPURTENANCES: TEES, BENDS, DEAD ENDS AND HYDRANTS. THE COST OF THRUST BLOCKS SHALL BE CONSIDERED INCIDENTAL AND INCLUDED IN THE APPROPRIATE LINE ITEM.
3. SEE SANITARY SEWER CLEANOUT DETAIL BELOW.
4. ALL CONSTRUCTION SHALL BE IN ACCORDANCE WITH STATEWIDE URBAN STANDARD DESIGN SPECIFICATIONS FOR PUBLIC IMPROVEMENTS (SUDAS). ALL CONSTRUCTION TESTING TO BE IN ACCORDANCE WITH SUDAS AND IS THE EXPENSE OF THE CONTRACTORS.
5. REFER TO MECHANICAL PLANS FOR UTILITY SERVICE CONNECTIONS TO OFFICE BUILDING. MECHANICAL PLANS CALL FOR STUBBING THE 4" SANITARY SEWER SERVICE TO A CLEAN-OUT (PART OF BUILDING BID PACKAGE) AND THE 1.5" WATER SERVICE 5' OUTSIDE OF BUILDING.
6. WATER SERVICE TO BE 1.5-INCH TYPE 'K' COPPER.

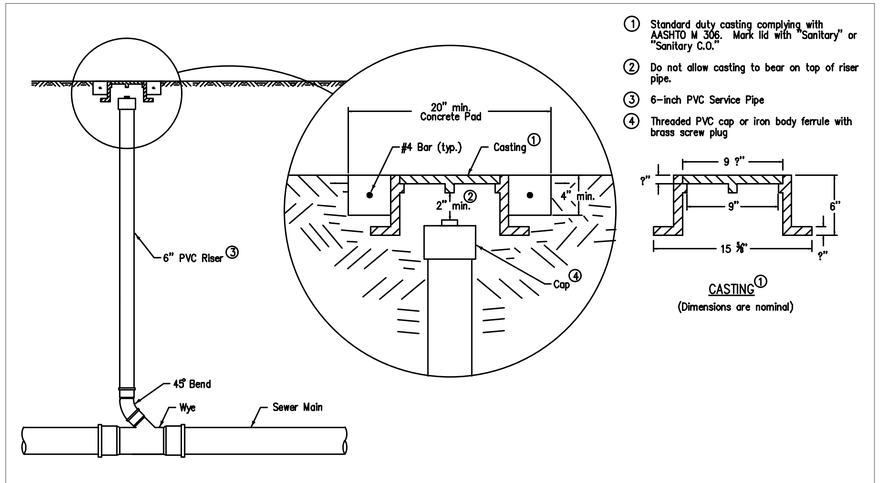

CLEANOUT

CASTING ①
(Dimensions are nominal)

SANITARY SEWER CLEANOUT

CONSULTANT:

IOWA DEPARTMENT OF NATURAL RESOURCES
ENGINEERING SERVICES - WALLACE BUILING
502 E. 9TH ST., DES MOINES, IA 50319-0034
P: 515.725.8200
F: 515.725.8202

UTILITY PLAN

NEW OFFICE & STORAGE BUILDING FOR:

VIKING LAKE STATE PARK

2780 VIKING LAKE ROAD STANTON, IA 51573

NO.	BY DATE	REVISION

DRAWN BY: PROJECT NUMBER: 17-04-69-02

CHK'D BY: DATE: 10.24.2018

SHEET No: C5

LEGEND
EXISTING/PROPOSED

S 6"	SANITARY SEWER
W 2"	WATER MAIN
ST 8"	STORM SEWER
E	ELECTRICAL LINE
990 990	ELEVATION
882.67 884.50	SPOT ELEVATION

NOTES
1. PROVIDE INSPECTION HOLES WITH 4" SCHEDULE 40 PIPES AT END OF EACH 36' CHAMBER RUN SECTIONS.
2. INDIVIDUAL TRENCHES SHALL HAVE LEVEL BOTTOM.

SANITARY SEWER SEPTIC/LEACH FIELD QUANTITIES
1 EA WILKINSON PRECAST 1250 GALLON SEPTIC TANK (OR EQUIVALENT)
1 EA ORENCO EFFLUENT FILTER MODEL #FTS0444-36V (OR EQUIVALENT)
1 EA TUF-TITE MODEL #6HD2 DISTRIBUTION BOX (OR EQUIVALENT) WITH (4) S-35 PIPE SEALS, P-10 PLUG AND AN INSPECTION PORT LID
134 LF 4-INCH SANITARY SEWER SERVICE (SDR 35)
8 EA 4-INCH 45° BENDS (SDR 35)
36 EA QUICK4 STANDARD CHAMBERS (4-FOOT LENGTHS)
8 EA QUICK4 MULTIPORT END CAPS
5 EA 4-INCH SCHEDULE 40 INSPECTION HOLE PIPES (2 LF EACH) WITH COVERS AND COUPLING RINGS
1 SW-203 SANITARY SEWER CLEANOUT

N

0 10 FEET

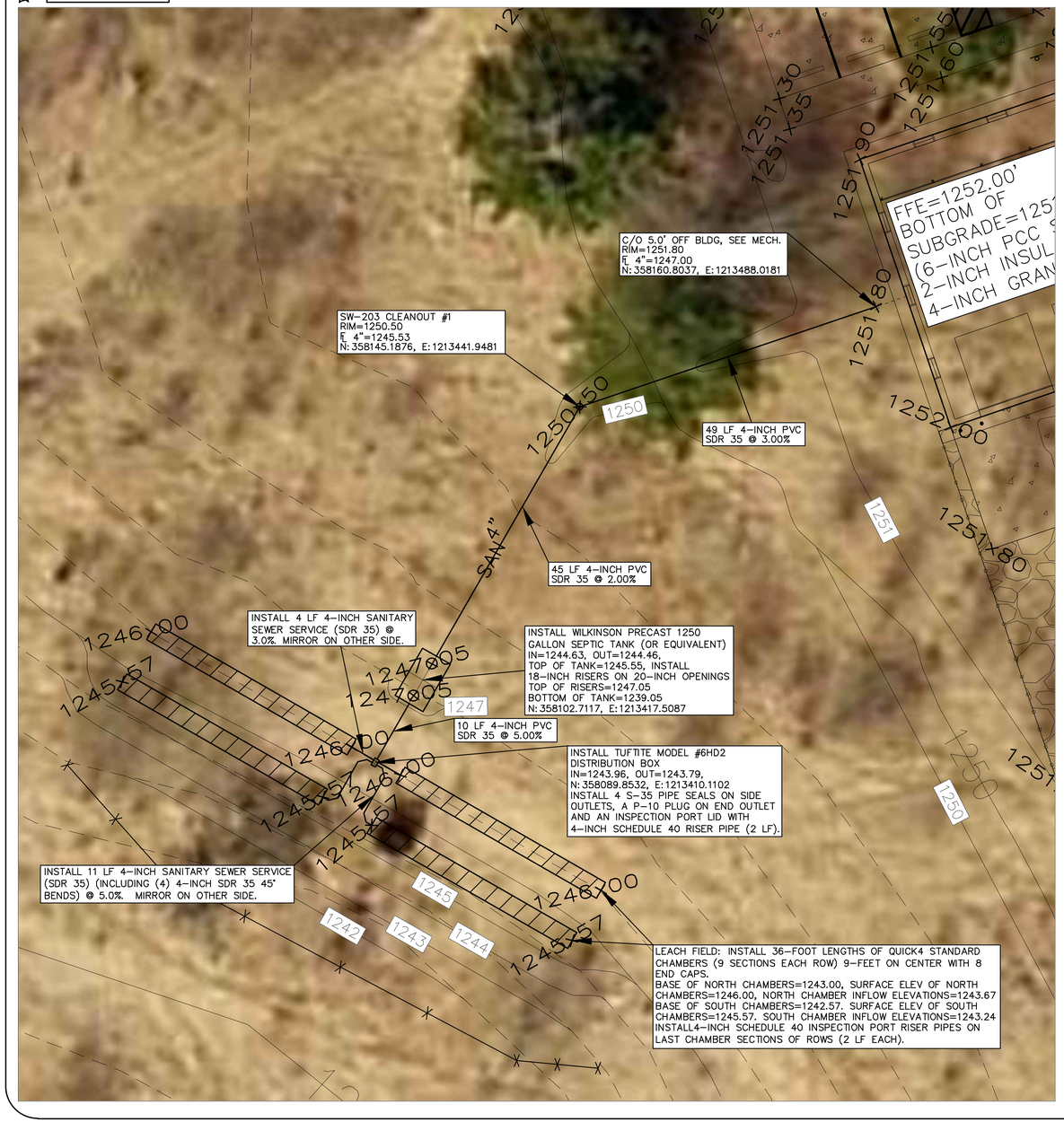

Top View

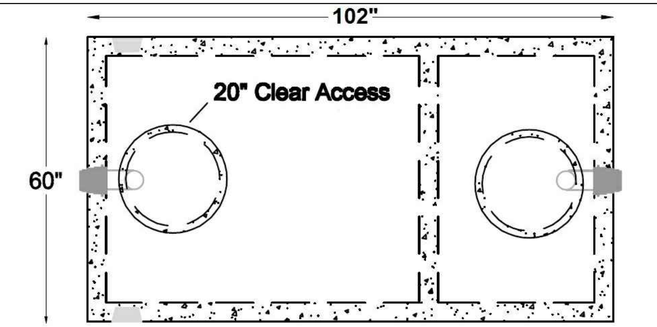

Section View

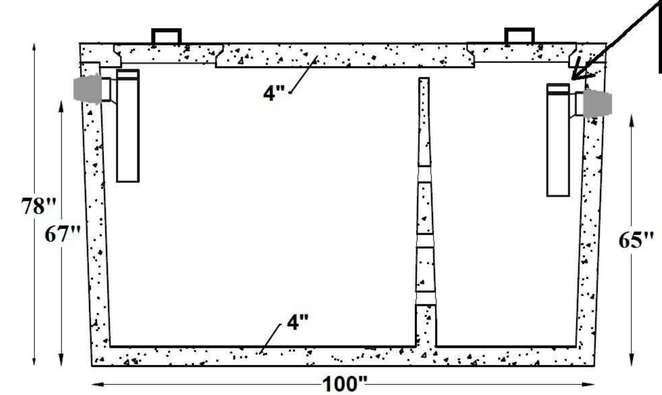

1250 GALLON PRECAST SEPTIC TANK DETAILS

Quick4 Standard Chamber

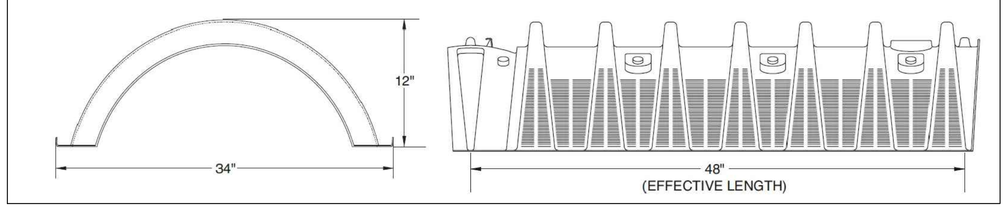

MultiPort EndCap

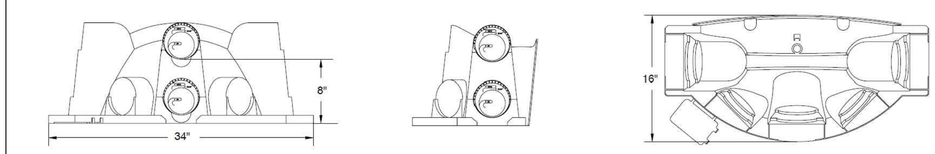

Typical Trench View

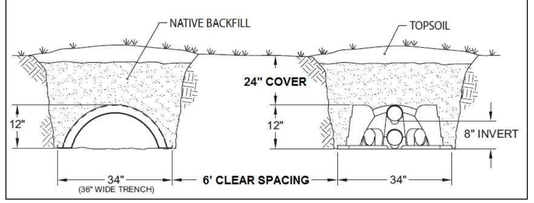

LATERAL DETAILS

CONSULTANT:

IOWA DEPARTMENT OF NATURAL RESOURCES
ENGINEERING SERVICES - WALLACE BUILING
502 E. 9TH ST., DES MOINES, IA 50319-0034
P: 515.725.8200
F: 515.725.8202

UTILITY PLAN-SANITARY SEWER

NEW OFFICE & STORAGE BUILDING FOR:
VIKING LAKE STATE PARK
2780 VIKING LAKE ROAD
STANTON, IA 51573

NO.	BY DATE	REVISION

DRAWN BY:
PROJECT NUMBER: 17-04-69-02
CHK'D BY:
DATE: 10.24.2018
SHEET No: C6

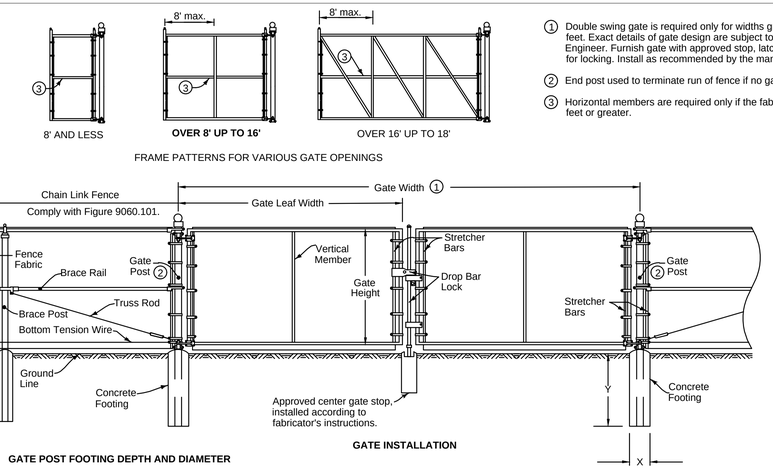

1. Double swing gate is required only for widths greater than 16 feet. Exact details of gate design are subject to approval of the Engineer. Furnish gate with approved stop, latch, and means for locking. Install as recommended by the manufacturer.
2. End post used to terminate run of fence if no gate is proposed.
3. Horizontal members are required only if the fabric height is 8 feet or greater.

GATE POST FOOTING DEPTH AND DIAMETER

GATE HEIGHT	GATE LEAF WIDTH	X	Y
6'-0" or less	4'-0" or less	0'-10"	3'-0"
6'-0" or less	over 4'-0" to 10'-0"	0'-12"	3'-0"
6'-0" or less	over 10'-0" to 18'-0"	1'-2"	3'-0"
over 6'-0"	6'-0" or less	0'-10"	3'-0"
over 6'-0"	over 6'-0" to 12'-0"	1'-0"	3'-0"
over 6'-0"	over 12'-0" to 18'-0"	1'-4"	3'-6"
over 6'-0"	over 18'-0" to 24'-0"	1'-6"	4'-0"

FIGURE 9060.102 SHEET 1 OF 1

REVISION New 10-18-11
9060.102
SHEET 1 of 1

CHAIN LINK GATE

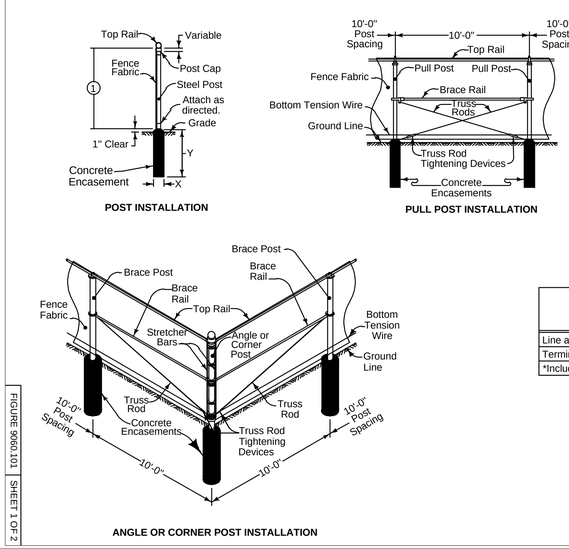

Place fence fabric on roadway side of post. For certain curves, stream crossings, or other locations, the Contractor has the option to place fabric on the side of the post away from the roadway.

1. Fabric width as specified in the contract documents.
2. For fence heights greater than 8 feet, the depth of the fence post footing is 3 feet plus 3 inches for each 1 foot in height over 8 feet.

FENCE POST FOOTING DEPTH AND DIAMETER

USE IN FENCE	FENCE HEIGHT						
	4'-0" and less		Over 4'-0" to 8'-0"		Over 8'-0"		
	X	Y	X	Y	X	Y	
Line and Brace Posts	0'-8"	3'-0"	0'-10"	3'-0"	1'-0"	2	
Terminal Post*	0'-10"	3'-0"	1'-0"	3'-0"	1'-4"	2	
*Includes corner, angle, end, and pull posts.							

FIGURE 9060.101 SHEET 1 OF 2

REVISION New 10-18-11
9060.101
SHEET 1 of 2

CHAIN LINK FENCE

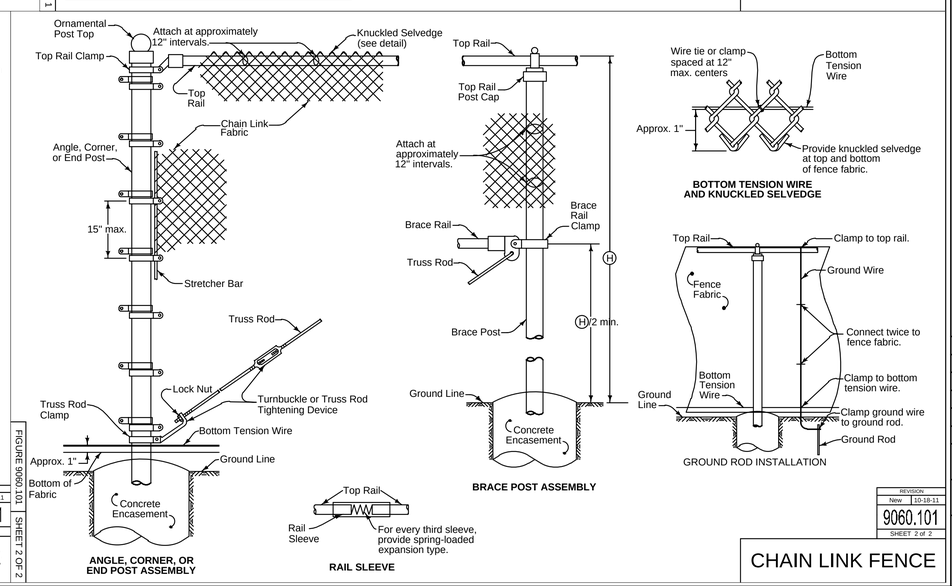

FIGURE 9060.101 SHEET 2 OF 2

REVISION New 10-18-11
9060.101
SHEET 2 of 2

CHAIN LINK FENCE

CONSULTANT:

IOWA DEPARTMENT OF NATURAL RESOURCES
ENGINEERING SERVICES - WALLACE BUILING
502 E. 9TH ST., DES MOINES, IA 50319-0034
P: 515.725.8200
F: 515.725.8202

STANDARD DETAILS

NEW OFFICE & STORAGE BUILDING FOR:

VIKING LAKE STATE PARK

2780 VIKING LAKE ROAD STANTON, IA 51573

NO.	BY / DATE	REVISION

DRAWN BY:
PROJECT NUMBER: 17–04–69–02
CHK'D BY:
DATE: 10.24.2018
SHEET No: C7

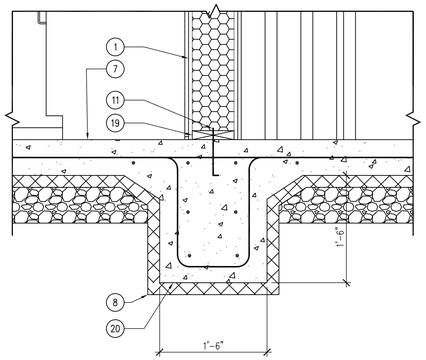

06 NOT USED
SCALE: NTS

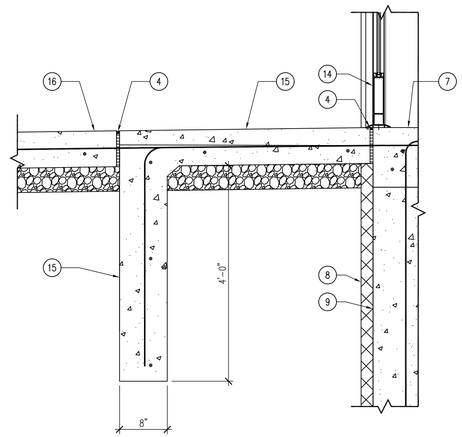

05 DETAIL – STOOP FOOTING
SCALE: 1" = 1'-0"

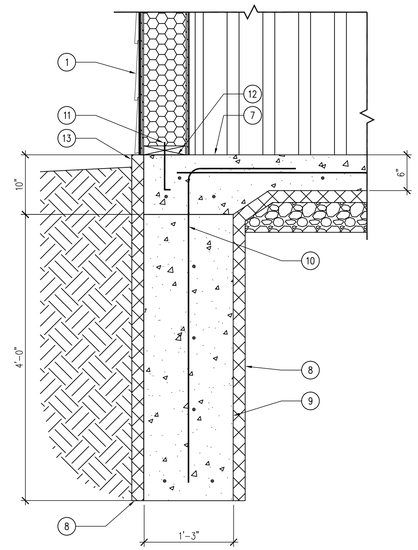

04 DETAIL – PERIMETER BUILDING FOOTING
SCALE: 1" = 1'-0"

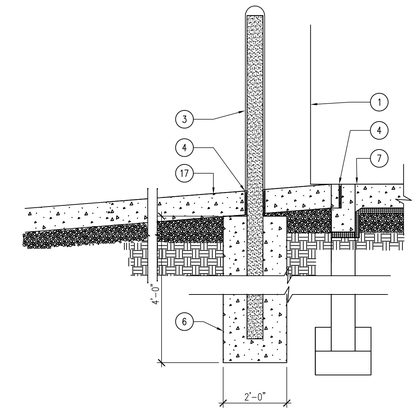

03 DETAIL – BOLLARD
SCALE: NTS

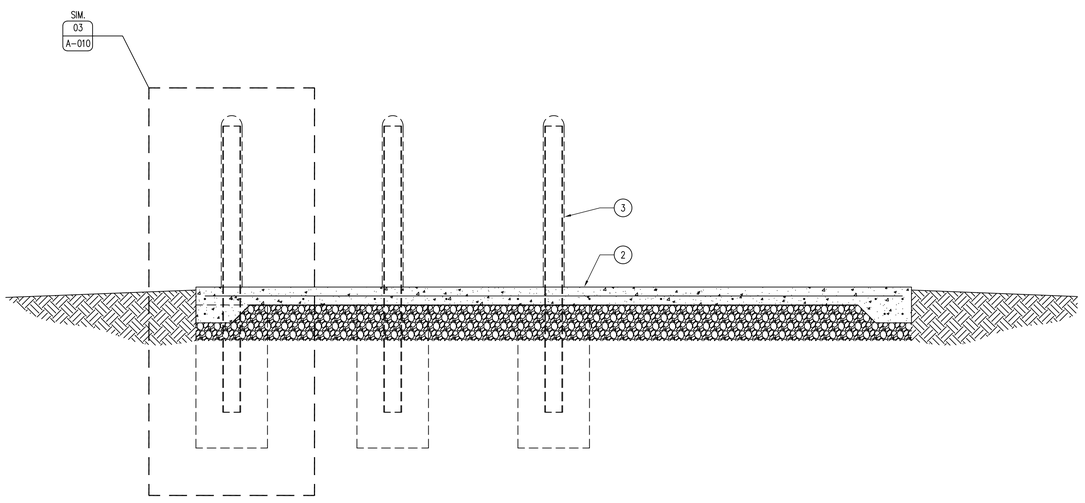

02 SECTION – FUEL & LP TANK PADS
SCALE: NTS

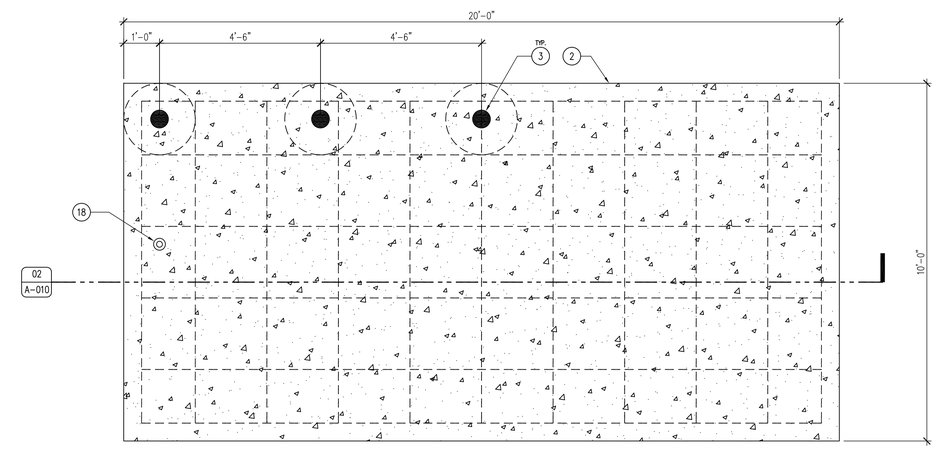

01 FUEL & LP TANK PAD LAYOUT
SCALE: NTS

FUEL & LP TANK NARRATIVE

CONTRACTOR SHALL PROVIDE:

FUEL TANK – THE FUEL TANK SHALL BE A 500 GALLON DOUBLE WALL, SPLIT 250/250 WITH ALL NECESSARY GAUGES, VENTS, CAPS, DRAIN PLUGS, OVERSPILL CONTAINMENT AND DECALS. ALL WIRING IS TO BE EXPLOSION PROOF. TWO GASBOY 72-S FUEL PUMPS (OR EQUAL) ARE TO BE INCLUDED WITH THE TANK. INSTALLATION INCLUDES ELECTRICAL HOOKUP TO ADJACENT BUILDING (REFER TO PLANS). TANK MUST MEET ALL APPLICABLE CODES FOR OUTSIDE FUEL STORAGE TANKS. ANY PERMITS NECESSARY WILL BE THE RESPONSIBILITY OF THE CONTRACTOR.

LP TANK – CONTRACTOR SHALL PURCHASE AND INSTALL (OR COORDINATE INSTALLATION WITH LP SUPPLIER) ONE (1) ONE-THOUSAND GALLON (1,000 GA) LIQUID PROPANE TANK. CONTRACTOR SHALL INCLUDE ALL NECESSARY EQUIPMENT (REGULATORS, PIPING, ETC.) FOR PROPER USE OF THE TANK. REFER TO CIVIL PLANS FOR MORE INFORMATION.

TANK PAD – TANK SHALL BE BOLTED DOWN TO A 6" THICK CONCRETE PAD (10'-0" X 20'-0") WITH #4 REBAR 24" O.C. BOTH DIRECTIONS OVER 6" SUBBASE AND 12" THICKENED EDGE, TO BE POURED BY THE CONTRACTOR AT A LOCATION TO BE DETERMINED BY CIVIL PLANS. THREE (3) BOLLARDS SHALL BE INSTALLED IN THE LAYOUT AS SHOWN (FUEL TANK PAD ONLY), SEE BOLLARD DETAIL FOR MORE INFORMATION.

1. PROPOSED BUILDING, REFER TO REFERENCE PLAN SHEET A-100 & A-200.
2. CONCRETE PAD FOR FUEL TANK & LP TANK, 6" THICK WITH #4 REBAR 24" O.C. BOTH DIRECTIONS, 12" SUBBASE, DIMENSION AS SHOWN.
3. 6" DIAMETER X 5/16" THICK STEEL POST, 8'-0" LONG. 3'-0" EMBEDDED IN CONCRETE FOOTING. FILL POST SOLID WITH CONCRETE GROUT, PROVIDE OSHA YELLOW PLASTIC COVER SLEEVES FOR ALL BOLLARDS.
4. ½" EXPANSION JOINT WITH CONTINUOUS SEALANT.
5. 24 GA. DARK BRONZE FLASHING, MATCH ROOF COLOR.
6. 24" DIAMETER CONCRETE FOOTING, MINIMUM 48" DEEP.
7. BUILDING SLAB, REFER TO REFERENCE PLANS.
8. 2" RIGID SUB-SLAB INSULATION. TAPE AND SEAL ALL JOINTS.
9. 15" CONCRETE TRENCH FOUNDATION WITH #5 REBAR 12" O.C. BOTH DIRECTIONS WITH 18" OVERLAP, MINIMUM 48" DEEP.
10. #4 "J" BAR, MINIMUM 36" EMBEDMENT INTO FOOTING, 24" EMBEDMENT INTO SLAB.
11. SILL ANCHOR, BY BUILDING MANUFACTURER.
12. SILL GASKET.
13. 24 GA. DARK BRONZE FLASHING, MATCH ROOF COLOR.
14. DOOR AS SCHEDULED.
15. 6" THICK STOOP FOOTING, #4 REBAR 24" O.C. ALL DIRECTIONS WITH 6" SUBBASE. TURN DOWN STOOP FOOTING ON THREE SIDES 48" MINIMUM.

KEYNOTES

16. 6" CONCRETE SIDEWALK WITH #4 REBAR 24" O.C. BOTH WAYS WITH 6" SUBBASE.
17. 6" CONCRETE APRON WITH #4 REBAR 24" O.C. BOTH WAYS WITH 6" SUBBASE.
18. 2" CONDUIT STUB FOR FUEL TANK. EXACT LOCATION TO BE DETERMINED ON-SITE BY INSPECTOR AND TANK SUPPLIER.
19. TREATED SILL PLATE BY BUILDING MANUFACTURER.
20. GRADE BEAM FOOTING, DIMENSION AS SHOWN. SIX (6) – #5 REBAR CONTINUOUS ALL DIRECTIONS, TIE INTO PERIMETER FOOTING AT ENDS OF BEAM.

GENERAL NOTES

A. REFER TO FINISH, DOOR & WINDOW SCHEDULE, SHEET A-600.
B. REFER TO REFLECTED CEILING PLAN FOR CEILING HEIGHTS, SHEET A-110.
C. REFER TO INDEX SHEET FOR WALL TYPES, SHEET A-002.
D. FIELD VERIFY ALL DIMENSIONS PRIOR TO CONSTRUCTION, SHEET A-101.
E. FIELD VERIFY ALL EQUIPMENT LOCATIONS FOR ELECTRICAL OUTLET LOCATIONS, REFER TO ELECTRICAL PLAN.
F. CONTRACTOR SHALL HAVE THIS BUILDING, PRIOR TO CONSTRUCTION, PRE-ENGINEERED BY BUILDING SUPPLIER.

CONSULTANT:

IOWA DEPARTMENT OF NATURAL RESOURCES
ENGINEERING SERVICES - WALLACE BUILING
502 E. 9TH ST., DES MOINES, IA 50319-0034
P: 515.725.8200
F: 515.725.8202

ARCHITECTURAL SITE DETAILS

NEW OFFICE & STORAGE BUILDING FOR:
VIKING LAKE STATE PARK

2780 VIKING LAKE ROAD
STANTON, IA 51573

NO.	BY / DATE	REVISION

DRAWN BY:
PROJECT NUMBER: 17-04-69-02
CHK'D BY:
DATE: 10.24.2018
SHEET No: A-010

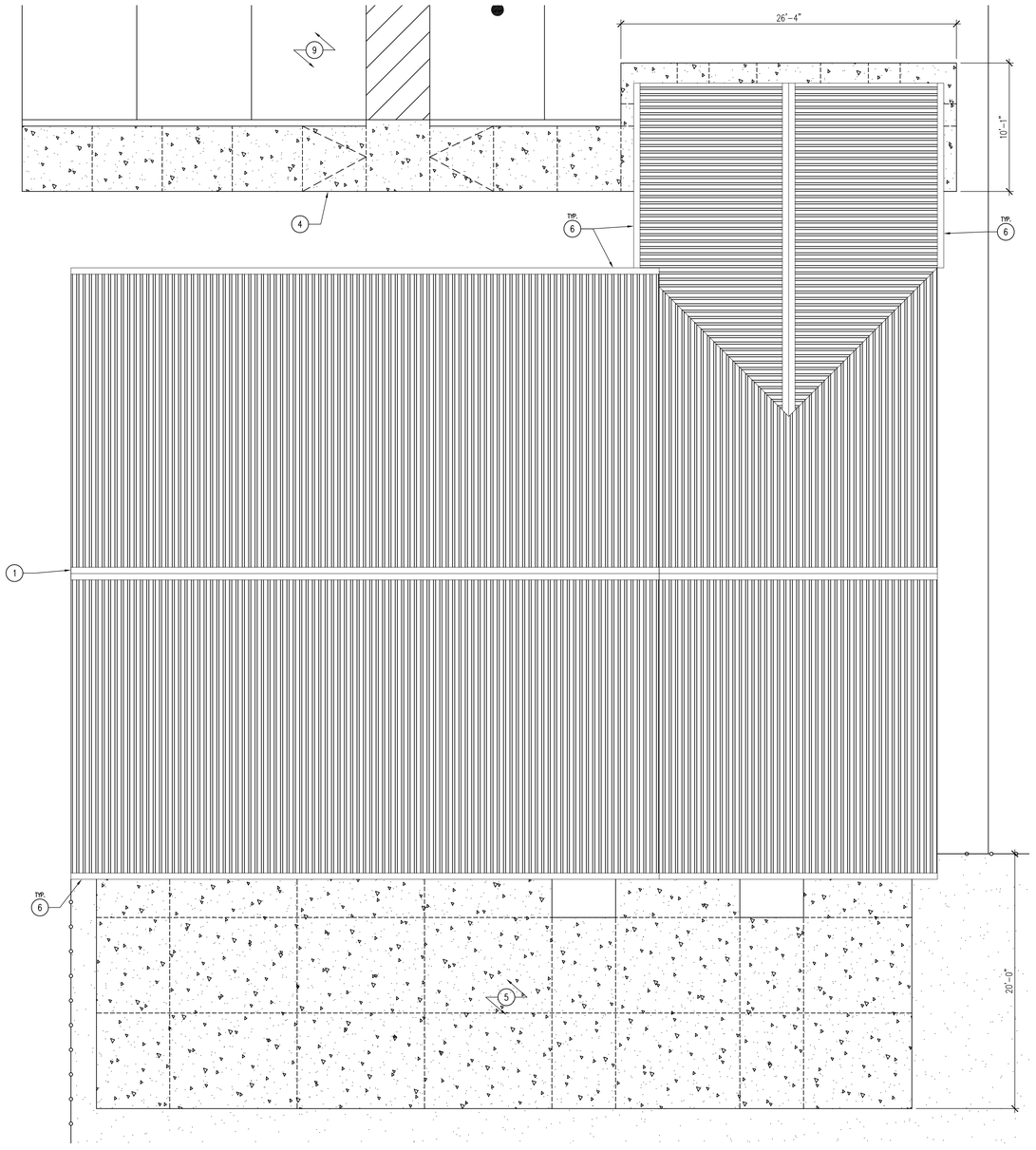

02 SITE PLAN – OFFICE & SHOP
SCALE: 3/16" = 1'-0"

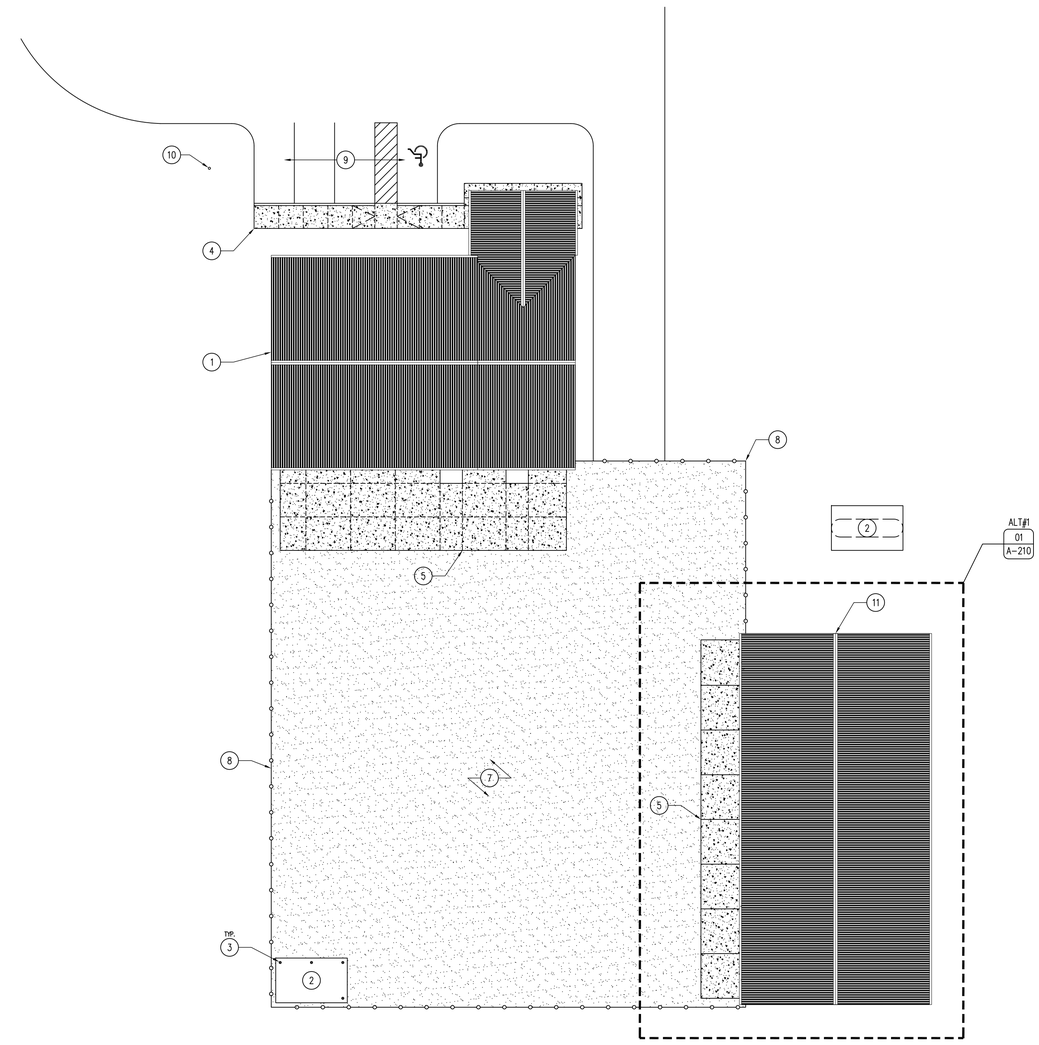

01 OVERALL SITE PLAN
SCALE: 1/16" = 1'-0"

FUEL & LP TANK NARRATIVE

CONTRACTOR SHALL PROVIDE:

FUEL TANK – THE FUEL TANK SHALL BE A 500 GALLON DOUBLE WALL, SPLIT 250/250 WITH ALL NECESSARY GAUGES, VENTS, CAPS, DRAIN PLUGS, OVERSPILL CONTAINMENT AND DECALS. ALL WIRING IS TO BE EXPLOSION PROOF. TWO GASBOY 72–S FUEL PUMPS (OR EQUAL) ARE TO BE INCLUDED WITH THE TANK. INSTALLATION INCLUDES ELECTRICAL HOOKUP TO ADJACENT BUILDING (REFER TO PLANS). TANK MUST MEET ALL APPLICABLE CODES FOR OUTSIDE FUEL STORAGE TANKS. ANY PERMITS NECESSARY WILL BE THE RESPONSIBILITY OF THE CONTRACTOR.

LP TANK – CONTRACTOR SHALL PURCHASE AND INSTALL (OR COORDINATE INSTALLATION WITH LP SUPPLIER) ONE (1) ONE–THOUSAND GALLON (1,000 GA) LIQUID PROPANE TANK. CONTRACTOR SHALL INCLUDE ALL NECESSARY EQUIPMENT (REGULATORS, PIPING, ETC.) FOR PROPER USE OF THE TANK. REFER TO CIVIL PLANS FOR MORE INFORMATION.

TANK PAD – TANK SHALL BE BOLTED DOWN TO A 6" THICK CONCRETE PAD (10'–0" X 16'–0") WITH #4 REBAR 24" O.C. BOTH DIRECTIONS OVER 6" SUBBASE AND 12" THICKENED EDGE, TO BE POURED BY THE CONTRACTOR AT A LOCATION TO BE DETERMINED BY CIVIL PLANS. FOUR (4) BOLLARDS SHALL BE INSTALLED IN THE LAYOUT AS SHOWN (FUEL TANK PAD ONLY), SEE BOLLARD DETAIL FOR MORE INFORMATION.

KEYNOTES

1. PROPOSED BUILDING, REFER TO REFERENCE PLAN SHEET A–100 & A–200.
2. CONCRETE PAD FOR NEW FUEL TANK, 6" THICK WITH #4 REBAR 24" O.C. BOTH DIRECTIONS, 12" SUBBASE, DIMENSION AS SHOWN.
3. 6" DIAMETER X 5/16" THICK STEEL POST, 8'–0" LONG. 3'–0" EMBEDDED IN CONCRETE FOOTING. FILL POST SOLID WITH CONCRETE GROUT, PROVIDE OSHA YELLOW PLASTIC COVER SLEEVES FOR ALL BOLLARDS.
4. 6" CONCRETE SIDEWALK WITH #4 REBAR 24" O.C. BOTH WAYS WITH 6" SUBBASE.
5. 6" CONCRETE APRON WITH #4 REBAR 24" O.C. BOTH WAYS WITH 6" SUBBASE.
6. GUTTER AND DOWNSPOUT SYSTEM WITH SHUR–FLO GUTTER GUARD SYSTEM.
7. CRUSHED ROCK EQUIPMENT YARD, REFER TO CIVIL DRAWINGS.
8. CHAINLINK FENCING, REFER TO CIVIL DRAWINGS.
9. PARKING AREA, REFER TO CIVIL DRAWINGS.
10. FLAG POLE, REFER TO CIVIL DRAWINGS.
11. ALTERNATE #1 – STORAGE BUILDING.

GENERAL NOTES

A. REFER TO FINISH, DOOR & WINDOW SCHEDULE, SHEET A–600.
B. REFER TO REFLECTED CEILING PLAN FOR CEILING HEIGHTS, SHEET A–110.
C. REFER TO INDEX SHEET FOR WALL TYPES, SHEET A–002.
D. FIELD VERIFY ALL DIMENSIONS PRIOR TO CONSTRUCTION, SHEET A–101.
E. FIELD VERIFY ALL EQUIPMENT LOCATIONS FOR ELECTRICAL OUTLET LOCATIONS, REFER TO ELECTRICAL PLAN.
F. CONTRACTOR SHALL HAVE THIS BUILDING, PRIOR TO CONSTRUCTION, PRE–ENGINEERED BY BUILDING SUPPLIER.

CONSULTANT:

IOWA DEPARTMENT OF NATURAL RESOURCES
ENGINEERING SERVICES - WALLACE BUILING
502 E. 9TH ST., DES MOINES, IA 50319-0034
P: 515.725.8200
F: 515.725.8202

ARCHITECTURAL SITE PLAN

NEW OFFICE & STORAGE BUILDING FOR:
VIKING LAKE STATE PARK

2780 VIKING LAKE ROAD
STANTON, IA 51573

NO.	BY / DATE	REVISION

DRAWN BY:
PROJECT NUMBER: 17-04-69-02
CHK'D BY:
DATE: 10.24.2018
SHEET No: A-011

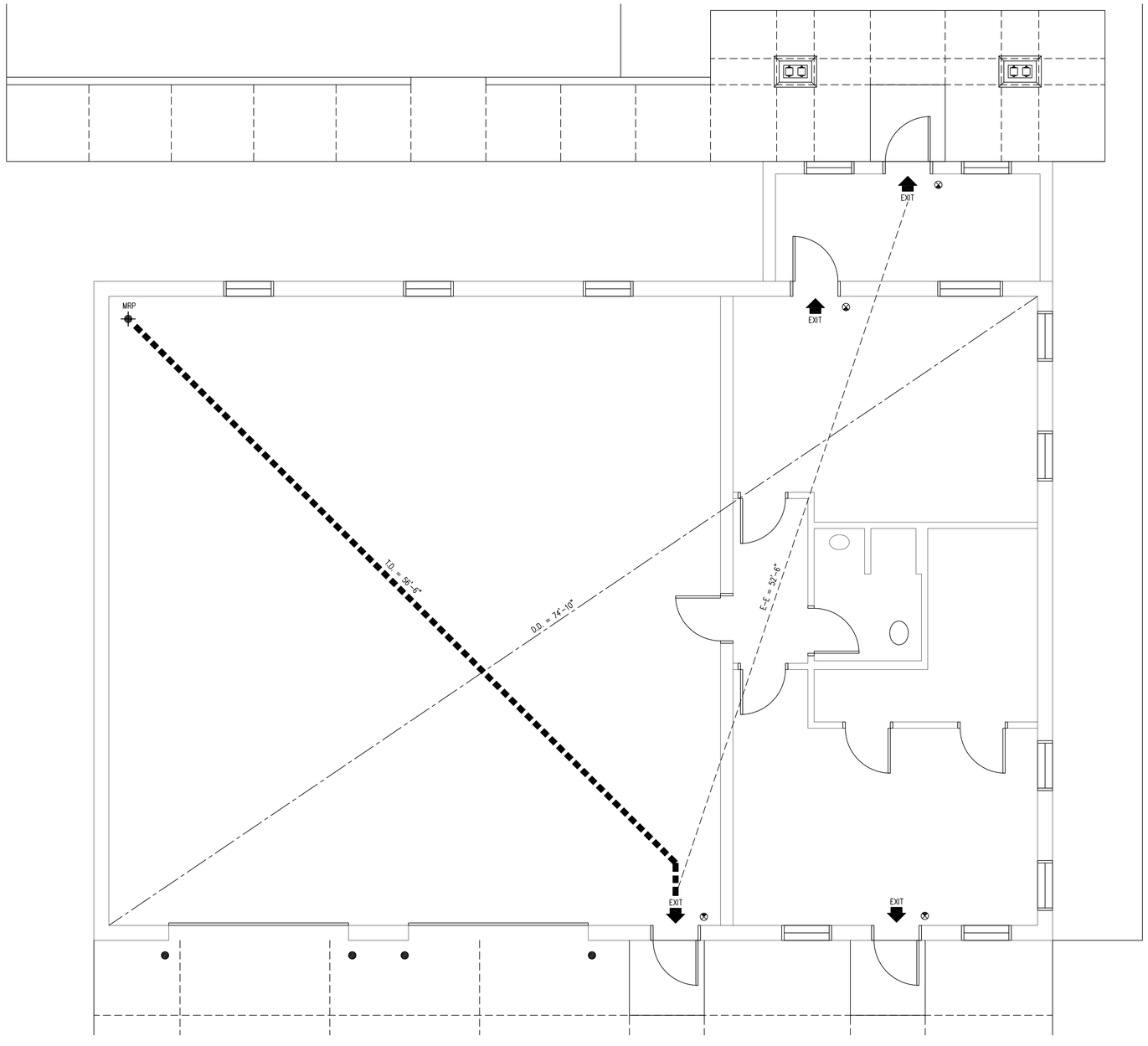

01 LIFE SAFETY PLAN
SCALE: 1/4" = 1'-0"

CODE SUMMARY

BUILDING AREA	2,970 GSF
TENANT AREA	708 NSF
CONSTRUCTION TYPE	V-B WITHOUT SPRINKLER SYSTEM
OCCUPANCY	GROUP B – BUSINESS / GROUP S-1 – STORAGE

	REQUIRED	PROVIDED
ALLOWABLE BLDG AREA (IBC TBL 503)	17,500 SF	2,970 SF
HEIGHT LIMITATION (IBC TBL 503)	2 STORIES (40')	1 STORIES (15')
AUTOMATIC SPRINKLER SYSTEM (NFPA 13)	NO	NO
EXIT ACCESS TRAVEL DISTANCE (IBC 1016.1)	200'-0"	56'-6"
EXIT ACCESS DOORWAYS (IBC TBL 1019.1)	1	3
EGRESS WIDTH PER OCCUPANT (IBC TBL 1005.1) LEVEL [.2"]	(.2") X 13 = 2.6"	3 DOORS @ 36"= 108"

LIFE SAFETY LEGEND

SYMBOL	DESCRIPTION	LINE TYPE
E-E	EXIT TO EXIT IN LINEAR FEET	
T.D.	TRAVEL DISTANCE FROM M.R.P.	
D.D.	DIAGONAL DISTANCE	
	EXIT LIGHT	
M.R.P.	MOST REMOTE POINT	
	EXIT / ENTRY	
FEC	FIRE EXTINGUISHER	

GENERAL NOTES

a. INFORMATION PROVIDED ON THE LIFE SAFETY PLAN INDICATES EGRESS REQUIREMENTS.
b. ALL CODE REFERENCES ARE FROM INTERNATIONAL BUILDING CODE, W/ AMENDMENTS UNLESS OTHERWISE NOTED

CONSULTANT:

IOWA DEPARTMENT OF NATURAL RESOURCES
ENGINEERING SERVICES - WALLACE BUILING
502 E. 9TH ST., DES MOINES, IA 50319-0034
P: 515.725.8200
F: 515.725.8202

LIFE SAFETY PLAN

NEW OFFICE & STORAGE BUILDING FOR:
VIKING LAKE STATE PARK

2780 VIKING LAKE ROAD
STANTON, IA 51573

NO.	BY / DATE	REVISION

DRAWN BY:
PROJECT NUMBER: 17-04-69-02
CHK'D BY:
DATE: 10.24.2018
SHEET No: A-020

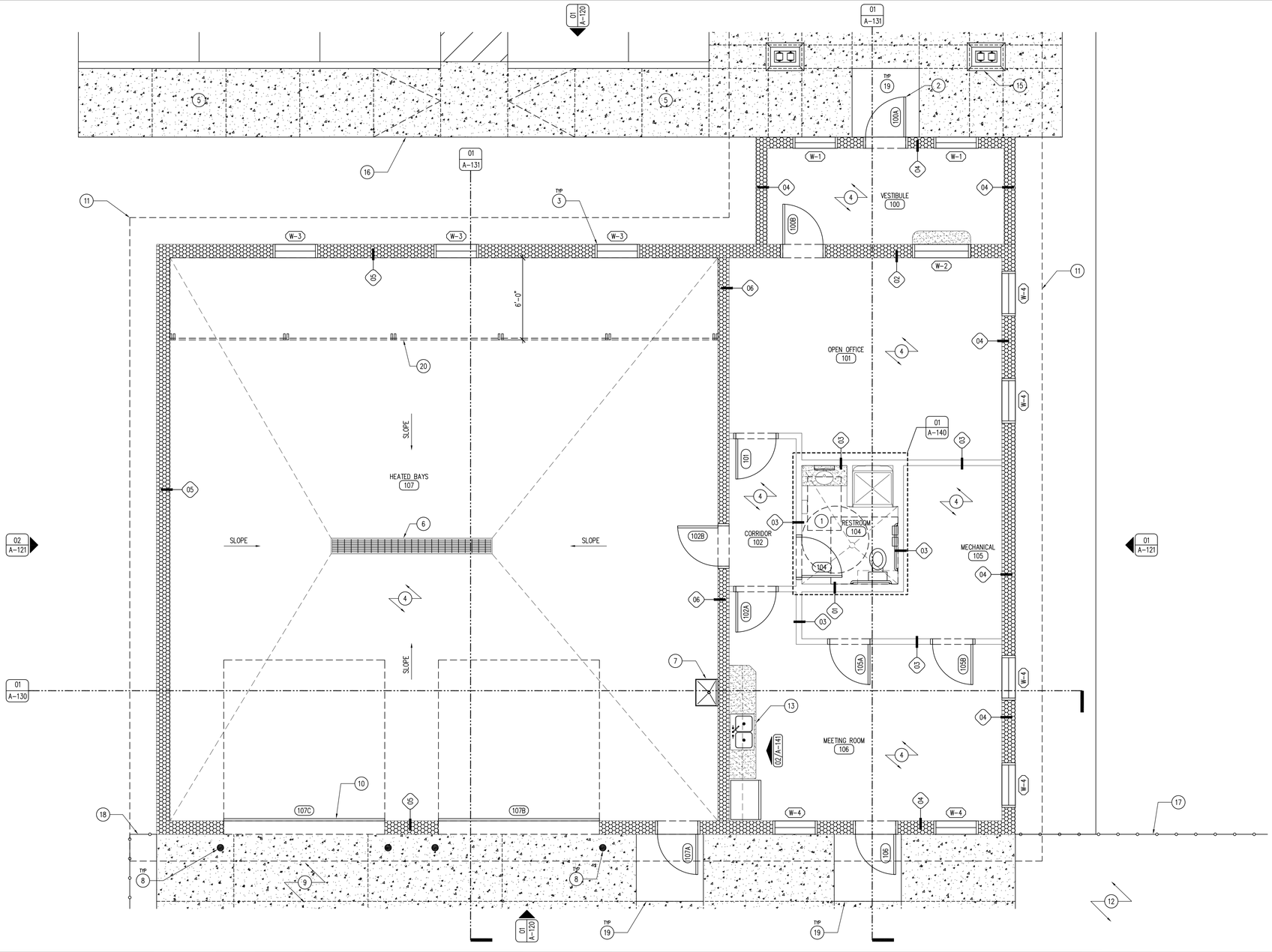

01 REFERENCE FLOOR PLAN
SCALE: 1/4" = 1'-0"

KEYNOTES

1. UNI-SEX RESTROOM, REFER TO ENLARGED FLOOR PLAN 01/A-140.
2. DOOR AS SCHEDULED, REFER TO SHEET A-600.
3. WINDOW AS SCHEDULED, REFER TO SHEET A-600.
4. FLOOR FINISH AS SCHEDULED, REFER TO SHEET A-600.
5. CONCRETE SIDEWALK, REFER TO CIVIL DRAWINGS.
6. TRENCH DRAIN WITH HEAVY DUTY STEEL GRATE, REFER TO PLUMBING DRAWINGS.
7. UTILITY SINK, REFER TO PLUMBING DRAWINGS.
8. STEEL TRAFFIC BOLLARD, REFER TO DETAIL 03/A-010.
9. 6" CONCRETE SLAB APRON WITH #4 REBAR 24" O.C. WITH 6" SUBBASE, TO EXTENT ENTIRE LENGTH OF BUILDING.
10. OVERHEAD GARAGE DOOR, REFER TO DOOR SCHEDULE SHEET A-600.
11. ROOF LINE ABOVE.
12. CRUSHED LIMESTONE EQUIPMENT YARD, REFER TO CIVIL DRAWINGS.
13. CABINETS AND COUNTER-TOP AS SPECIFIED, REFER TO SHEET A-141.
14. CONCRETE DRIVE, REFER TO CIVIL DRAWINGS.
15. COLUMN BASE, REFER TO SHEET A-120.
16. ADA SIDEWALK RAMP WITH DETECTION STRIP, REFER TO CIVIL DRAWINGS FOR MORE INFORMATION.
17. FENCE SWING-GATE, REFER TO CIVIL DRAWINGS FOR MORE INFORMATION.
18. FENCING, REFER TO CIVIL DRAWINGS FOR MORE INFORMATION.
19. STOOP FOOTING, REFER TO SHEET A-010.
20. 6'-0" DEEP X LENGTH OF BUILDING, SUSPENDED LOFT, TO BE ENGINEERED BY BUILDING MANUFACTURER TO HOLD 100 PSF. SAFETY CHAINS PER OSHA REGULATIONS, 18" AND 36" HEIGHT.

GENERAL NOTES

A. REFER TO FINISH, DOOR & WINDOW SCHEDULE, SHEET A-600.
B. REFER TO REFLECTED CEILING PLAN FOR CEILING HEIGHTS, SHEET A-110.
C. REFER TO INDEX SHEET FOR WALL TYPES, SHEET A-002.
D. FIELD VERIFY ALL DIMENSIONS PRIOR TO CONSTRUCTION, SHEET A-101.
E. FIELD VERIFY ALL EQUIPMENT LOCATIONS FOR ELECTRICAL OUTLET LOCATIONS, REFER TO ELECTRICAL PLAN.
F. CONTRACTOR SHALL HAVE THIS BUILDING, PRIOR TO CONSTRUCTION, PRE-ENGINEERED BY BUILDING SUPPLIER.
G. REFER TO ELECTRICAL DRAWINGS FOR LIGHTING AND POWER LAYOUTS.
H. CONTRACTOR SHALL CAULK ALL INTERIOR CONCRETE SAW-CUT JOINTS AND ALL EXPANSION JOINTS WITH FLOWABLE URETHANE SEALANT, COLOR TO BE GRAY.

CONSULTANT:

IOWA DEPARTMENT OF NATURAL RESOURCES
ENGINEERING SERVICES - WALLACE BUILING
502 E. 9TH ST., DES MOINES, IA 50319-0034
P: 515.725.8200
F: 515.725.8202

REFERENCE FLOOR PLAN

NEW OFFICE & STORAGE BUILDING FOR:
VIKING LAKE STATE PARK

2780 VIKING LAKE ROAD
STANTON, IA 51573

NO.	BY / DATE	REVISION

DRAWN BY:
PROJECT NUMBER: 17-04-69-02
CHK'D BY:
DATE: 10.24.2018
SHEET No: A-100

03 NOT USED
SCALE: 1/4" = 1'-0"

02 NOT USED
SCALE: 1 1/2" = 1'-0"

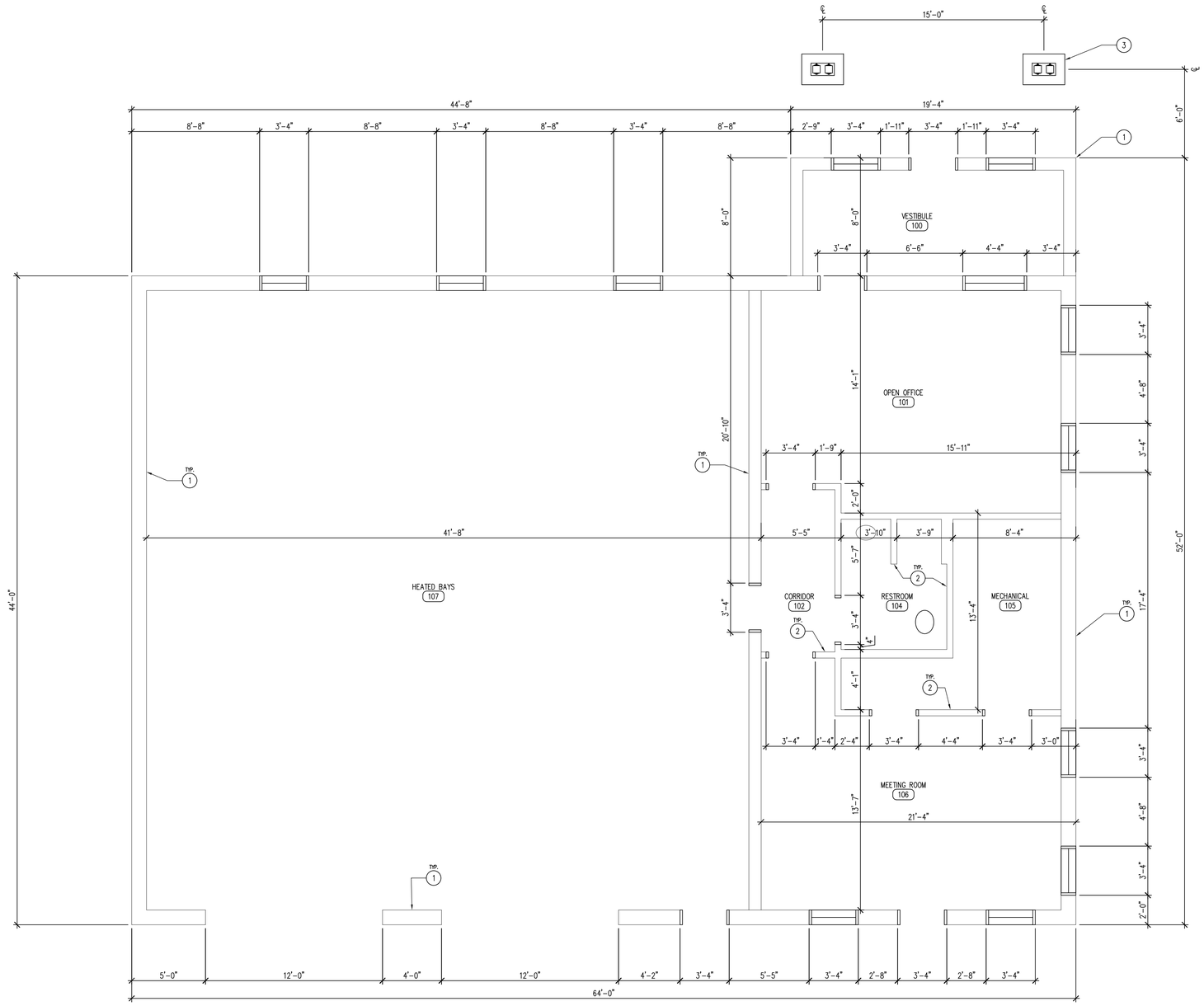

01 DIMENSION FLOOR PLAN
SCALE: 1/4" = 1'-0"

KEYNOTES

1. STRUCTURAL INSULATED PANEL WALL, SEE WALL TYPES SHEET A-002.
2. INTERIOR STUD WALL, SEE WALL TYPES SHEET A-002.
3. CANOPY OVERHANG COLUMNS.

GENERAL NOTES

A. REFER TO FINISH, DOOR & WINDOW SCHEDULE, SHEET A-600.
B. REFER TO REFLECTED CEILING PLAN FOR CEILING HEIGHTS, SHEET A-110.
C. REFER TO INDEX SHEET FOR WALL TYPES, SHEET A-002.
D. FIELD VERIFY ALL DIMENSIONS PRIOR TO CONSTRUCTION, SHEET A-101.
E. FIELD VERIFY ALL EQUIPMENT LOCATIONS FOR ELECTRICAL OUTLET LOCATIONS, REFER TO ELECTRICAL PLAN.
F. CONTRACTOR SHALL HAVE THIS BUILDING, PRIOR TO CONSTRUCTION, PRE-ENGINEERED BY BUILDING SUPPLIER.
G. REFER TO ELECTRICAL DRAWINGS FOR LIGHTING AND POWER LAYOUTS.

CONSULTANT:

IOWA DEPARTMENT OF NATURAL RESOURCES
ENGINEERING SERVICES - WALLACE BUILING
502 E. 9TH ST., DES MOINES, IA 50319-0034
P: 515.725.8200
F: 515.725.8202

DIMENSION FLOOR PLAN

NEW OFFICE & STORAGE BUILDING FOR:
VIKING LAKE STATE PARK

2780 VIKING LAKE ROAD
STANTON, IA 51573

NO.	BY DATE	REVISION

DRAWN BY:
PROJECT NUMBER: 17-04-69-02
CHK'D BY:
DATE: 10.24.2018
SHEET No: **A-101**

02 NOT USED
SCALE: 1/4" = 1'-0"

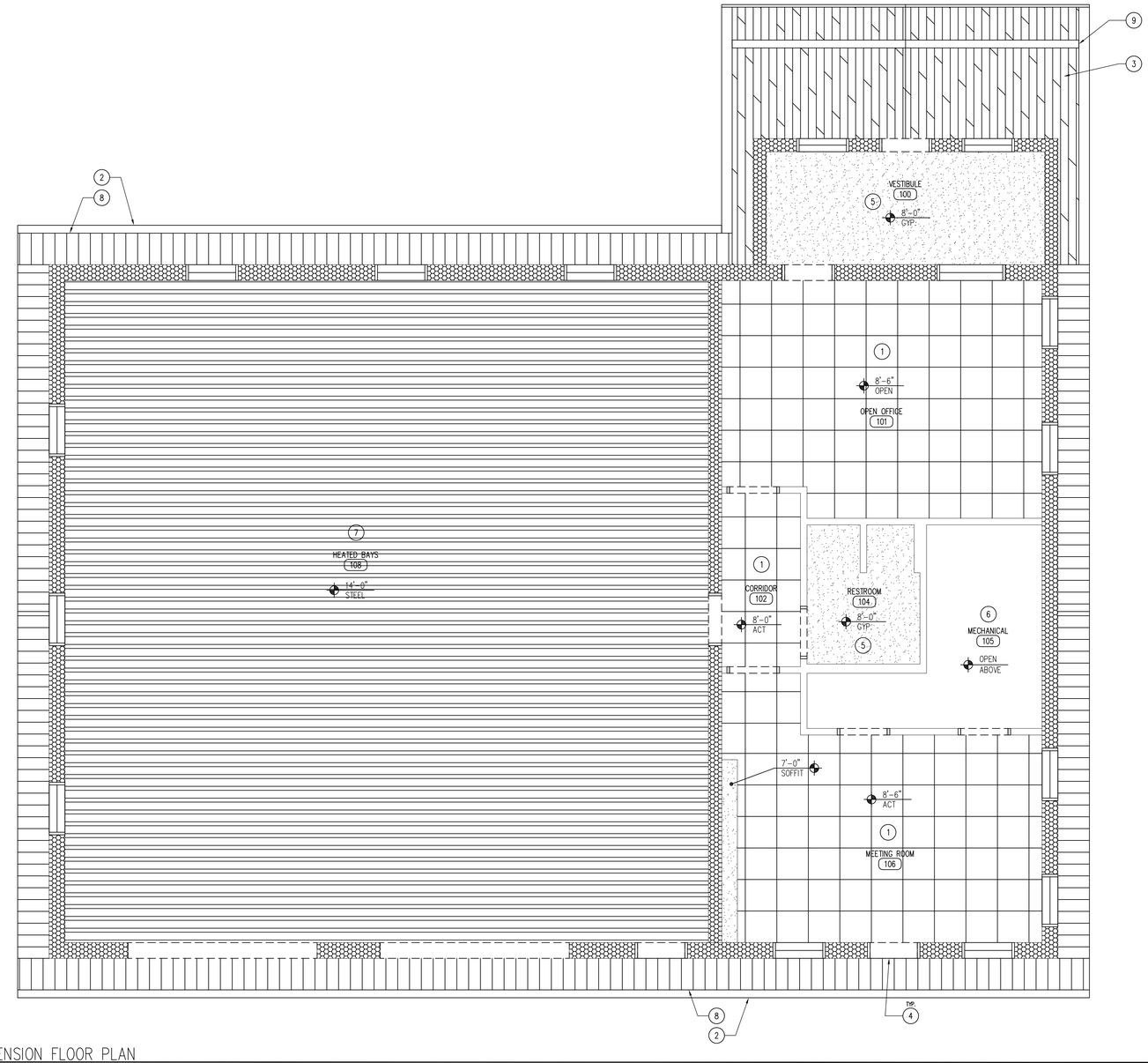

01 DIMENSION FLOOR PLAN
SCALE: 1/4" = 1'-0"

LEGEND

- 2' x 2' CEILING TILE AND GRID SYSTEM
- 5/8" TYPE X GYPSUM BOARD
- 29 GAUGE LINER PANEL

KEYNOTES

1. 2' X 2' X $\frac{3}{4}$" ARMSTRONG ULTIMA (TEGULAR) ACOUSTICAL CEILING TILE WITH $\frac{15}{16}$" PRELUDE SUSPENSION SYSTEM.
2. 6" SEAMLESS GUTTER AND DOWNSPOUT SYSTEM TO MATCH ROOF COLOR. INCLUDE SHUR-FLO GUTTER GUARDS ON ALL GUTTERS.
3. 3X DOUGLAS FIR T&G CEILING, TWO COATS OF CLEAR POLYURETHANE.
4. DOOR HEADER BELOW.
5. $\frac{5}{8}$" GYPSUM HARD CEILING.
6. NO-CEILING - OPEN TO GYPSUM DECKING ABOVE.
7. 29 GAUGE LINER PANEL - WHITE.
8. FLUSH SOFFIT PANELS TO MATCH STANDING SEAM METAL ROOF.
9. DOUGLAS FIR, HEAVY TIMBER, ROUGH SAWN TRUSS.

GENERAL NOTES

A. REFER TO FINISH, DOOR & WINDOW SCHEDULE, SHEET A-600.
B. REFER TO REFLECTED CEILING PLAN FOR CEILING HEIGHTS, SHEET A-110.
C. REFER TO INDEX SHEET FOR WALL TYPES, SHEET A-002.
D. FIELD VERIFY ALL DIMENSIONS PRIOR TO CONSTRUCTION, SHEET A-101.
E. FIELD VERIFY ALL EQUIPMENT LOCATIONS FOR ELECTRICAL OUTLET LOCATIONS, REFER TO ELECTRICAL PLAN.
F. CONTRACTOR SHALL HAVE THIS BUILDING, PRIOR TO CONSTRUCTION, PRE-ENGINEERED BY BUILDING SUPPLIER.
G. REFER TO ELECTRICAL DRAWINGS FOR LIGHTING AND POWER LAYOUTS.

CONSULTANT:

IOWA DEPARTMENT OF NATURAL RESOURCES
ENGINEERING SERVICES - WALLACE BUILING
502 E. 9TH ST., DES MOINES, IA 50319-0034
P: 515.725.8200
F: 515.725.8202

REFLECTED CEILING PLAN

NEW OFFICE & STORAGE BUILDING FOR:
VIKING LAKE STATE PARK
2780 VIKING LAKE ROAD
STANTON, IA 51573

NO.	BY DATE	REVISION

DRAWN BY:
PROJECT NUMBER: 17-04-69-02
CHK'D BY:
DATE: 10.24.2018
SHEET No: A-110

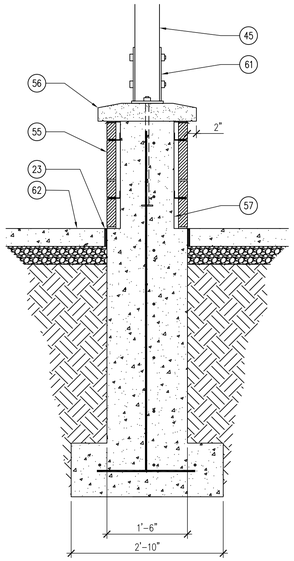

04 DETAIL – SECTION OF PORCH COLUMN BASE
SCALE: 3/4" = 1'-0"

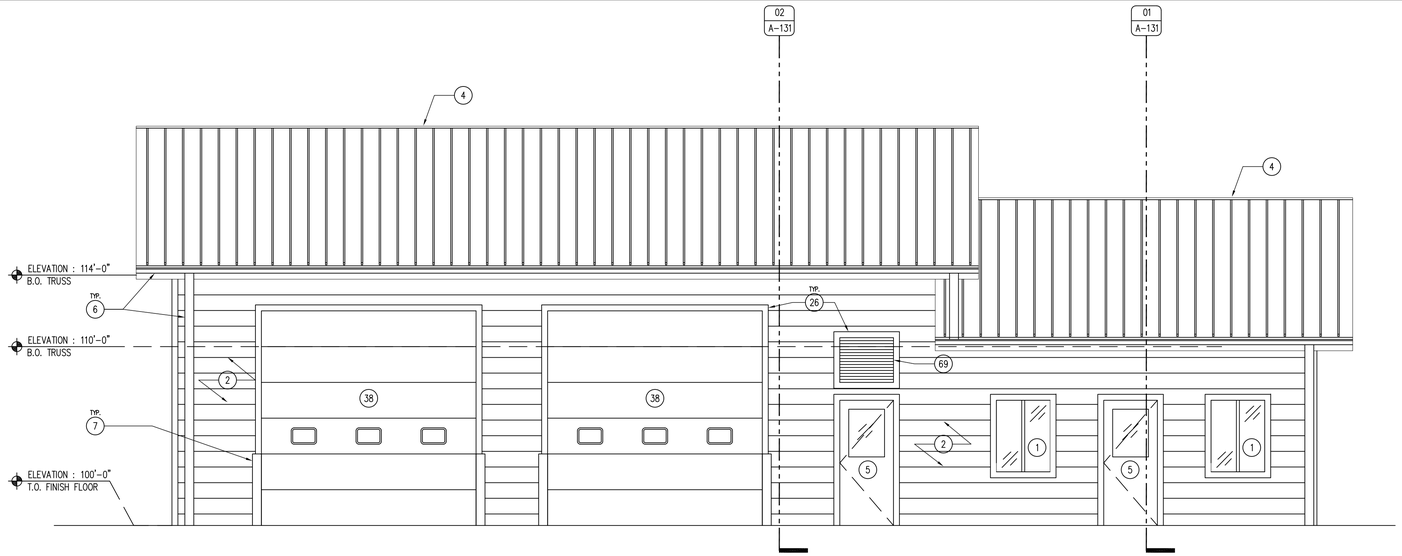

03 BUILDING ELEVATION – EAST
SCALE: 1/4" = 1'-0"

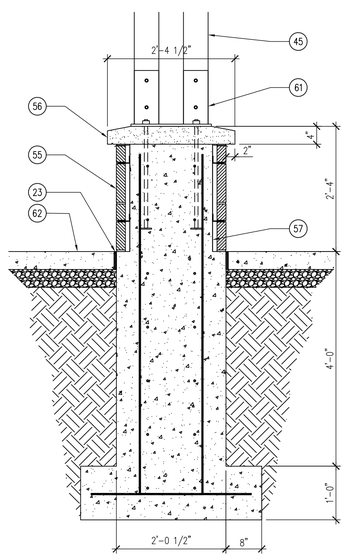

02 DETAIL – SECTION OF PORCH COLUMN BASE
SCALE: 3/4" = 1'-0"

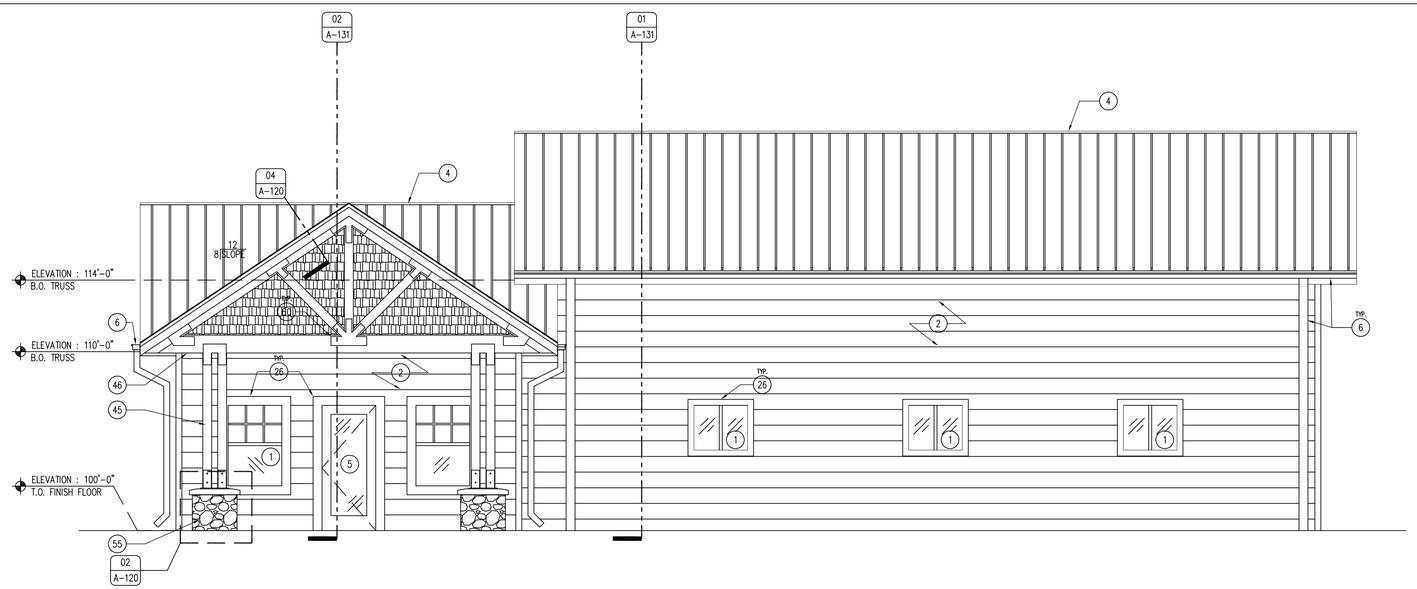

01 BUILDING ELEVATION – WEST
SCALE: 1/4" = 1'-0"

KEYNOTES

1. WINDOW AS SCHEDULED, REFER TO SHEET A-600.
2. 8 ¼" JAMES HARDIE PLANK LAP SIDING, SELECT CEDARMILL, COLOR TO BE TIMBER BARK.
3. METAL VENTED FLUSH-SOFFIT AND FASCIA PANEL. COLOR TO MATCH ROOF.
4. PAC-CLAD SNAP-CLAD METAL ROOF, COLOR TO BE DARK BRONZE.
5. DOOR AS SCHEDULED, REFER TO SHEET A-600.
6. 6" SEAMLESS METAL GUTTER AND DOWNSPOUT SYSTEM WITH SHUR-FLO GUTTER GUARDS.
7. TRAFFIC BOLLARD WITH PLASTIC COVER SLEEVE, REFER TO 03/A-010.
8. S-5! COLORGARD SNOW AND ICE GUARD BAR, PLACE OVER ENTIRE EAVE OF ROOF, BOTH SIDES.
9. 2X BLOCKING AS REQUIRED.
10. INSULATION BAFFLE.
11. TRUSS HANGER CLIP (SPECIFIED BY BUILDING MANUFACTURER).
12. TRUSS (SPECIFIED BY BUILDING MANUFACTURER), FOR DEMONSTRATION PURPOSES ONLY.
13. STRUCTURAL INSULATED PANEL (SIP) WALL, BY BUILDING MANUFACTURER.
14. BUILDING WRAP, PER MANUFACTURER'S RECOMMENDATIONS.
15. TOP PLATE WITH SEALANT ON ALL POINTS, PER BUILDING MANUFACTURER'S RECOMMENDATIONS.
16. R-42 CERTAINTEED FIBER-GLASS BATT ATTIC INSULATION.
17. ¾" PLYWOOD ROOF DECK SHEATHING WITH WATER AND ICE SHIELD OVER ENTIRE ROOF.
18. PAC-CLAD RIDGE VENT AND CAP, MATCH COLOR OF ROOF.
19. ROOF CLIPS, PER MANUFACTURER'S RECOMMENDATIONS.
20. CONCRETE FOOTING/FOUNDATION, REFER TO DETAILS SHEET A-010.
21. 29 GAUGE STEEL LINER PANEL THROUGHOUT ENTIRE HEATED BAY AREA – WHITE.
22. 2" SUB-SLAB RIGID INSULATION UNDER ENTIRE SLAB AND AROUND PERIMETER OF FOUNDATION. TAPE AND SEAL ALL JOINTS.
23. ½" EXPANSION JOINT WITH SEALANT.
24. TREATED SIP SILL PLATE, PER MANUFACTURER'S RECOMMENDATIONS.
25. ⅝" TYPE X GYPSUM BOARD DECK. INSTALL DIRECTLY TO TRUSSES THROUGHOUT OFFICE AREA.
26. 5.5" JAMES HARDIE 4/4 RUSTIC TRIM BOARDS, PRIMED AND PAINTED DARK BRONZE AROUND WINDOWS AND DOORS, COLOR TO MATCH SIDING ON BUILDING CORNERS.
27. 6" SOUND BATT INSULATION.
28. 4" SOUND BATT INSULATION.
29. ADA ACCESSIBLE DOOR THRESHOLD.
30. 24 X 24 ARMSTRONG ULTIMA TEGULAR ACOUSTIC CEILING TILES, REFER TO SHEET A-600.
31. PARTITION WALL AS SCHEDULED, REFER TO SHEET A-002.
32. TRENCH DRAIN, REFER TO PLUMBING DRAWINGS.
33. 6" R-19 BATT INSULATION.
34. 2X FASCIA, WRAP IN BREAK METAL TO MATCH ROOF.
35. METAL VALLEY FLASHING BY ROOFING MANUFACTURER.
36. METAL SILL FLASHING BY BUILDING MANUFACTURER.
37. METAL HEAD-WALL FLASHING BY ROOFING MANUFACTURER.
38. OVERHEAD GARAGE DOOR, REFER TO SHEET A-600.
39. 6" CONCRETE SLAB WITH CONTINUOUS #4 REBAR 24" O.C. BOTH DIRECTIONS, OVER 2" SUB-SLAB RIGID INSULATION, TAPED AND SEALED, WITH 6" SUBBASE.
40. #5 DOWEL, EMBED INTO SLAB 24" MINIMUM.
41. WALL FINISH AS SCHEDULED, REFER TO SHEET A-600.
42. METAL FLASHING, MATCH ROOF COLOR.
43. BACKER ROD AND SEALANT.
44. #5 DOWEL-ROD "J" HOOK, EMBED 36" INTO FOOTING, 18" INTO SLAB.
45. 6X6 ROUGH-SAWN DOUGLAS FIR COLUMN, STAIN WITH TWO COATS TWP 116.
46. HEAVY TIMBER, ROUGH-SAWN DOUGLAS FIR TRUSS, STAIN TWO COATS TWP 116 WITH OVERSIZED METAL BRACKETS AS SHOWN, POWDER COAT BLACK.
47. ¾" X 4" HARD MAPLE TRIM, REFER TO SHEET A-600.
48. 3X DOUGLAS FIR T&G DECKING, TWO COATS OF CLEAR POLYURETHANE.
49. CEILING AS SCHEDULED, REFER TO SHEET A-110.
50. UTILITY SINK, REFER TO PLUMBING DRAWINGS.
51. RUBBER BASE, REFER TO SHEET A-600.
52. CELLULAR PVC PROTECTION BOARD.
53. NOT USED.
54. NOT USED.
55. STONE COLUMN BASE, BEDFACE SURFACE OF VARYING HEIGHTS, BUCKINGHAM RUSTIC ROYAL CHATEAU – THIN VENEER, BY EDEN STONE. MORTAR TO BE WHITE BASED ASTM C270, COLOR TBD.
56. 4" HONED INDIANA LIMESTONE COLUMN CAP, BUFF COLORED, WITH DRIP EDGE.
57. CAST IN PLACE CONCRETE COLUMN FOUNDATION WITH #4 REBAR 12" O.C. ALL DIRECTIONS.
58. 2X6 CEDAR FASCIA TRIM EDGE, STAIN TWO COATS TWP 116.
59. SILL GASKET.
60. ⅜" OVERSIZED MILD-STEEL TRUSS BRACKET, POWDER COAT BLACK. ALL HARDWARE TO BE ¾" GALVANIZED WITH LOCK WASHERS.
61. STEEL COLUMN BASE PLATE, 3/8" MILD-STEEL POWDER COATED BLACK. ANCHOR BOLTS TO BE UNDER COLUMNS, PILOT HOLE CAP AND BASE PLATE, THEN EPOXY SET ANCHOR BOLTS INTO CONCRETE BASE, LEVEL. EMBED MINIMUM 18".
62. CONCRETE WALK WITH SUBBASE, REFER TO CIVIL DRAWINGS.
63. SILL ANCHOR, PER BUILDING MANUFACTURER'S RECOMMENDATIONS.
64. SELF-ADHERED WATER AND ICE SHIELD OVER ENTIRE ROOF DECKING.
65. 2X OUTRIGGER EAVE, PER BUILDING MANUFACTURER.
66. METAL RAKE EDGE FLASHING BY ROOFING MANUFACTURER.
67. 6" CONCRETE APRON SLAB WITH CONTINUOUS #4 REBAR 24" O.C. BOTH DIRECTIONS WITH 4" SUBBASE.
68. STOOP FOOTING, REFER TO 02/A-010.
69. LOUVER VENT, REFER TO MECHANICAL DRAWINGS.
70. 6'-0" DEEP X LENGTH OF BUILDING, SUSPENDED LOFT, TO BE ENGINEERED BY BUILDING MANUFACTURER TO HOLD 100 PSF. SAFETY CHAINS PER OSHA REGULATIONS, 18" AND 36" HEIGHT.

GENERAL NOTES

A. REFER TO FINISH, DOOR & WINDOW SCHEDULE, SHEET A-600.
B. REFER TO REFLECTED CEILING PLAN FOR CEILING HEIGHTS, SHEET A-110.
C. REFER TO INDEX SHEET FOR WALL TYPES, SHEET A-002.
D. FIELD VERIFY ALL DIMENSIONS PRIOR TO CONSTRUCTION, SHEET A-101.
E. FIELD VERIFY ALL EQUIPMENT LOCATIONS FOR ELECTRICAL OUTLET LOCATIONS, REFER TO ELECTRICAL PLAN.
F. CONTRACTOR SHALL HAVE THIS BUILDING, PRIOR TO CONSTRUCTION, PRE-ENGINEERED BY BUILDING SUPPLIER.
G. CONTRACTOR SHALL CAULK ALL CONCRETE SAW-CUT JOINTS AND EXPANSION JOINTS WITH FLOWABLE URETHANE SEALANT, COLOR TO BE GRAY.

CONSULTANT:

IOWA DEPARTMENT OF NATURAL RESOURCES
ENGINEERING SERVICES - WALLACE BUILING
502 E. 9TH ST., DES MOINES, IA 50319-0034
P: 515.725.8200
F: 515.725.8202

EXTERIOR ELEVATIONS

NEW OFFICE & STORAGE BUILDING FOR:
VIKING LAKE STATE PARK

STANTON, IA 51573

2780 VIKING LAKE ROAD

NO.	BY / DATE	REVISION

DRAWN BY:
PROJECT NUMBER: 17-04-69-02
CHK'D BY:
DATE: 10.24.2018
SHEET No: A-120

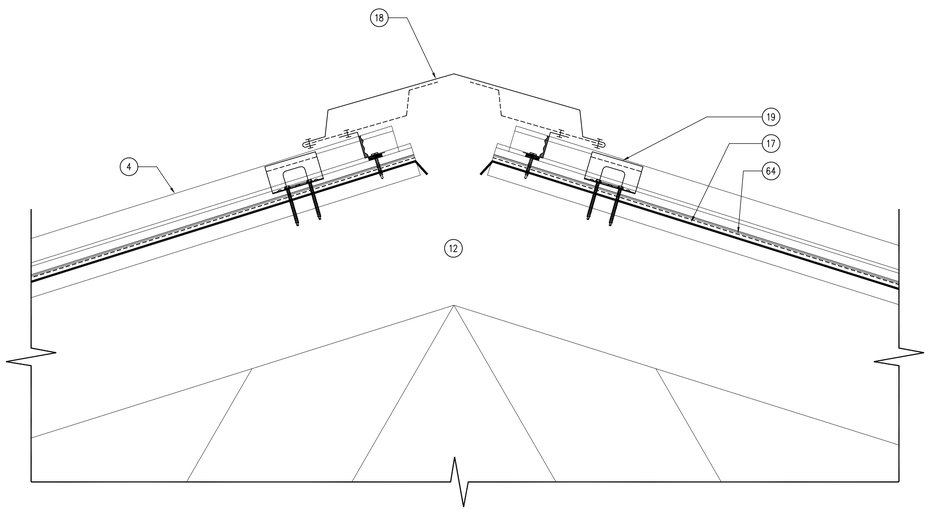

04 ROOF DETAIL – RIDGE
SCALE: 3" = 1'-0"

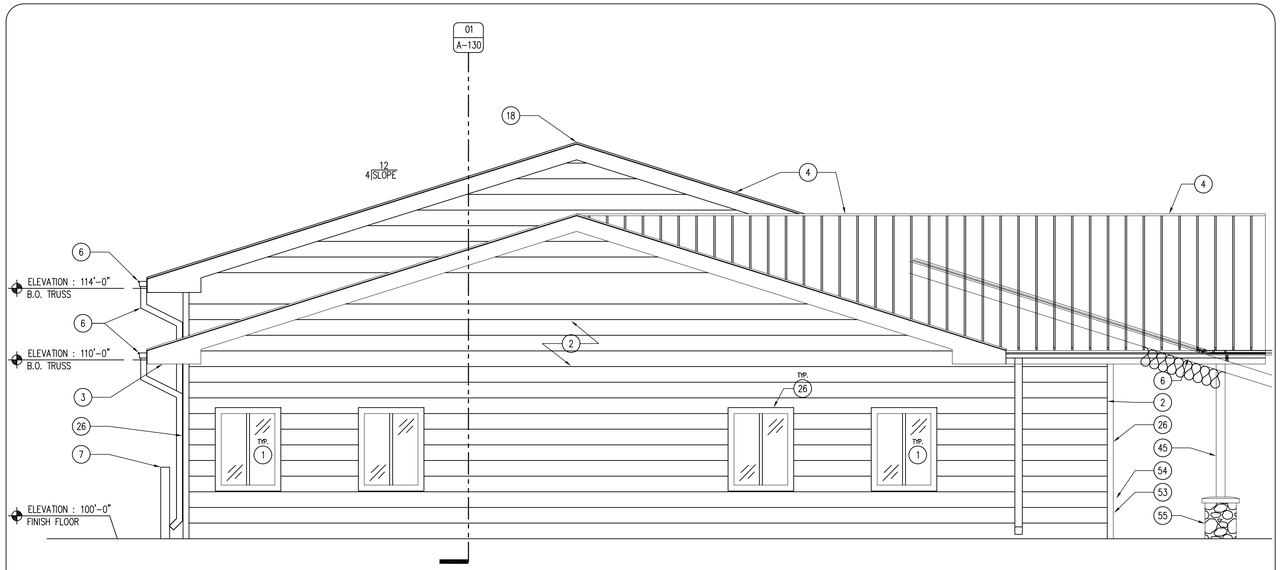

03 EXTERIOR ELEVATION – NORTH
SCALE: 1/4" = 1'-0"

WEST ELEVATION

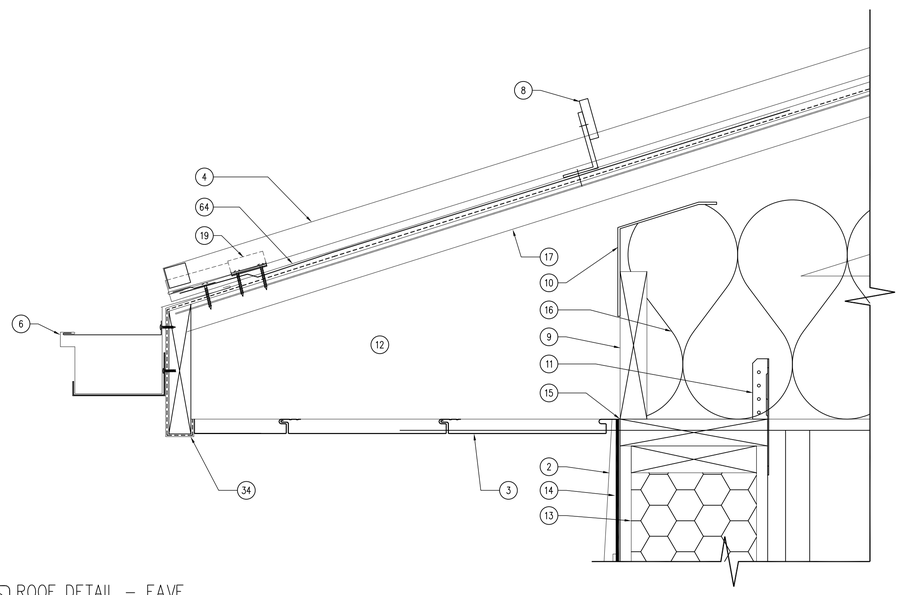

02 ROOF DETAIL – EAVE
SCALE: 3" = 1'-0"

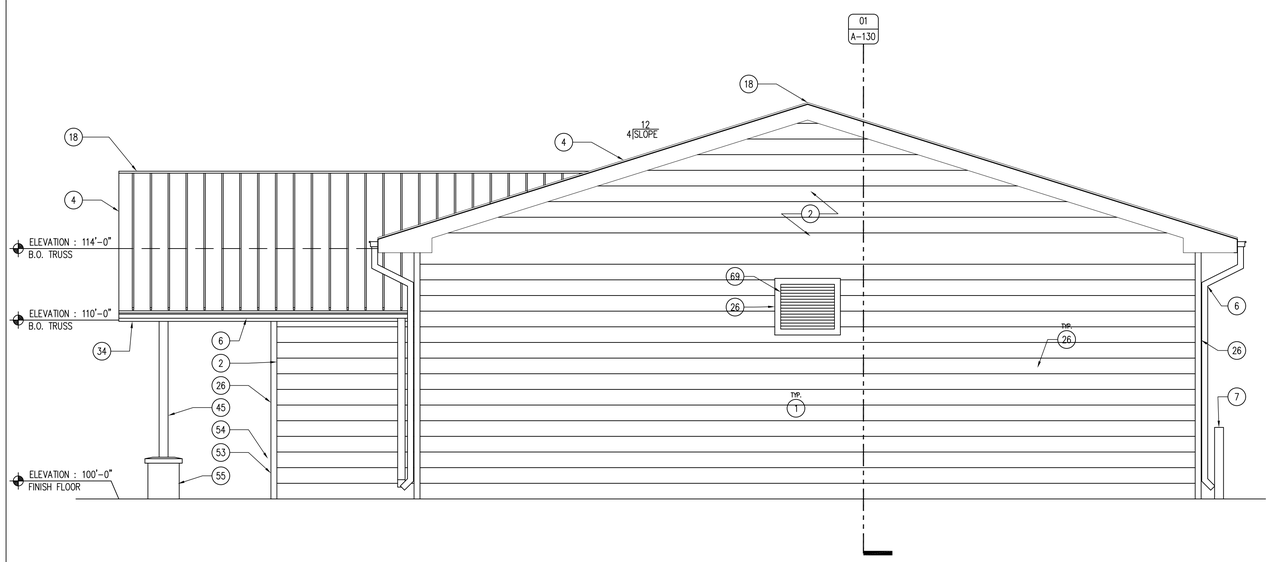

01 EXTERIOR ELEVATION – SOUTH
SCALE: 1/4" = 1'-0"

EAST ELEVATION

KEYNOTES

1. WINDOW AS SCHEDULED, REFER TO SHEET A-600.
2. 8 ¼" JAMES HARDIE PLANK LAP SIDING, SELECT CEDARMILL, COLOR TO BE TIMBER BARK.
3. METAL VENTED FLUSH-SOFFIT AND FASCIA PANEL. COLOR TO MATCH ROOF.
4. PAC-CLAD SNAP-CLAD METAL ROOF, COLOR TO BE DARK BRONZE.
5. DOOR AS SCHEDULED, REFER TO SHEET A-600.
6. 6" SEAMLESS METAL GUTTER AND DOWNSPOUT SYSTEM WITH SHUR-FLO GUTTER GUARDS.
7. TRAFFIC BOLLARD WITH PLASTIC COVER SLEEVE, REFER TO 03/A-010.
8. S-5! COLORGARD SNOW AND ICE GUARD BAR, PLACE OVER ENTIRE EAVE OF ROOF, BOTH SIDES.
9. 2X BLOCKING AS REQUIRED.
10. INSULATION BAFFLE.
11. TRUSS HANGER CLIP (SPECIFIED BY BUILDING MANUFACTURER).
12. TRUSS (SPECIFIED BY BUILDING MANUFACTURER), FOR DEMONSTRATION PURPOSES ONLY.
13. STRUCTURAL INSULATED PANEL (SIP) WALL, BY BUILDING MANUFACTURER.
14. BUILDING WRAP, PER MANUFACTURER'S RECOMMENDATIONS.
15. TOP PLATE WITH SEALANT ON ALL POINTS, PER BUILDING MANUFACTURER'S RECOMMENDATIONS.
16. R-42 CERTAINTEED FIBER-GLASS BATT ATTIC INSULATION.
17. ¾" PLYWOOD ROOF DECK SHEATHING WITH WATER AND ICE SHIELD OVER ENTIRE ROOF.
18. PAC-CLAD RIDGE VENT AND CAP, MATCH COLOR OF ROOF.
19. ROOF CLIPS, PER MANUFACTURER'S RECOMMENDATIONS.
20. CONCRETE FOOTING/FOUNDATION, REFER TO DETAILS SHEET A-010.
21. 29 GAUGE STEEL LINER PANEL THROUGHOUT ENTIRE HEATED BAY AREA – WHITE.
22. 2" SUB-SLAB RIGID INSULATION UNDER ENTIRE SLAB AND AROUND PERIMETER OF FOUNDATION. TAPE AND SEAL ALL JOINTS.
23. ½" EXPANSION JOINT WITH SEALANT.
24. TREATED SIP SILL PLATE, PER MANUFACTURER'S RECOMMENDATIONS.
25. ⅝" TYPE X GYPSUM BOARD DECK. INSTALL DIRECTLY TO TRUSSES THROUGHOUT OFFICE AREA.
26. 5.5" JAMES HARDIE 4/4 RUSTIC TRIM BOARDS, PRIMED AND PAINTED DARK BRONZE AROUND WINDOWS AND DOORS, COLOR TO MATCH SIDING ON BUILDING CORNERS.
27. 6" SOUND BATT INSULATION.
28. 4" SOUND BATT INSULATION.
29. ADA ACCESSIBLE DOOR THRESHOLD.
30. 24 X 24 ARMSTRONG ULTIMA TEGULAR ACOUSTIC CEILING TILES, REFER TO SHEET A-600.
31. PARTITION WALL AS SCHEDULED, REFER TO SHEET A-002.
32. TRENCH DRAIN, REFER TO PLUMBING DRAWINGS.
33. 6" R-19 BATT INSULATION.
34. 2X FASCIA, WRAP IN BREAK METAL TO MATCH ROOF.
35. METAL VALLEY FLASHING BY ROOFING MANUFACTURER.
36. METAL SILL FLASHING BY BUILDING MANUFACTURER.
37. METAL HEAD-WALL FLASHING BY ROOFING MANUFACTURER.
38. OVERHEAD GARAGE DOOR, REFER TO SHEET A-600.
39. 6" CONCRETE SLAB WITH CONTINUOUS #4 REBAR 24" O.C. BOTH DIRECTIONS, OVER 2" SUB-SLAB RIGID INSULATION, TAPED AND SEALED, WITH 6" SUBBASE.
40. #5 DOWEL, EMBED INTO SLAB 24" MINIMUM.
41. WALL FINISH AS SCHEDULED, REFER TO SHEET A-600.
42. METAL FLASHING, MATCH ROOF COLOR.
43. BACKER ROD AND SEALANT.
44. #5 DOWEL-ROD "J" HOOK, EMBED 36" INTO FOOTING, 18" INTO SLAB.
45. 6X6 ROUGH-SAWN DOUGLAS FIR COLUMN, STAIN WITH TWO COATS TWP 116.
46. HEAVY TIMBER, ROUGH-SAWN DOUGLAS FIR TRUSS, STAIN TWO COATS TWP 116 WITH OVERSIZED METAL BRACKETS AS SHOWN, POWDER COAT BLACK.
47. ¾" X 4" HARD MAPLE TRIM, REFER TO SHEET A-600.
48. 3X DOUGLAS FIR T&G DECKING, TWO COATS OF CLEAR POLYURETHANE.
49. CEILING AS SCHEDULED, REFER TO SHEET A-110.
50. UTILITY SINK, REFER TO PLUMBING DRAWINGS.
51. RUBBER BASE, REFER TO SHEET A-600.
52. CELLULAR PVC PROTECTION BOARD.
53. NOT USED.
54. NOT USED.
55. STONE COLUMN BASE, BEDFACE SURFACE OF VARYING HEIGHTS, BUCKINGHAM RUSTIC ROYAL CHATEAU – THIN VENEER, BY EDEN STONE. MORTAR TO BE WHITE BASED ASTM C270, COLOR TBD.
56. 4" HONED INDIANA LIMESTONE COLUMN CAP, BUFF COLORED, WITH DRIP EDGE.
57. CAST IN PLACE CONCRETE COLUMN FOUNDATION WITH #4 REBAR 12" O.C. ALL DIRECTIONS.
58. 2X6 CEDAR FASCIA TRIM EDGE, STAIN TWO COATS TWP 116.
59. SILL GASKET.
60. ⅜" OVERSIZED MILD-STEEL TRUSS BRACKET, POWDER COAT BLACK. ALL HARDWARE TO BE ¾" GALVANIZED WITH LOCK WASHERS.
61. STEEL COLUMN BASE PLATE, 3/8" MILD-STEEL POWDER COATED BLACK. ANCHOR BOLTS TO BE UNDER COLUMNS, PILOT HOLE CAP AND BASE PLATE, THEN EPOXY SET ANCHOR BOLTS INTO CONCRETE BASE, LEVEL. EMBED MINIMUM 18".
62. CONCRETE WALK WITH SUBBASE, REFER TO CIVIL DRAWINGS.
63. SILL ANCHOR, PER BUILDING MANUFACTURER'S RECOMMENDATIONS.
64. SELF-ADHERED WATER AND ICE SHIELD OVER ENTIRE ROOF DECKING.
65. 2X OUTRIGGER EAVE, PER BUILDING MANUFACTURER.
66. METAL RAKE EDGE FLASHING BY ROOFING MANUFACTURER.
67. 6" CONCRETE APRON SLAB WITH CONTINUOUS #4 REBAR 24" O.C. BOTH DIRECTIONS WITH 4" SUBBASE.
68. STOOP FOOTING, REFER TO 02/A-010.
69. LOUVER VENT, REFER TO MECHANICAL DRAWINGS.
70. 6'-0" DEEP X LENGTH OF BUILDING, SUSPENDED LOFT, TO BE ENGINEERED BY BUILDING MANUFACTURER TO HOLD 100 PSF. SAFETY CHAINS PER OSHA REGULATIONS, 18" AND 36" HEIGHT.

GENERAL NOTES

A. REFER TO FINISH, DOOR & WINDOW SCHEDULE, SHEET A-600.
B. REFER TO REFLECTED CEILING PLAN FOR CEILING HEIGHTS, SHEET A-110.
C. REFER TO INDEX SHEET FOR WALL TYPES, SHEET A-002.
D. FIELD VERIFY ALL DIMENSIONS PRIOR TO CONSTRUCTION, SHEET A-101.
E. FIELD VERIFY ALL EQUIPMENT LOCATIONS FOR ELECTRICAL OUTLET LOCATIONS, REFER TO ELECTRICAL PLAN.
F. CONTRACTOR SHALL HAVE THIS BUILDING, PRIOR TO CONSTRUCTION, PRE-ENGINEERED BY BUILDING SUPPLIER.
G. CONTRACTOR SHALL CAULK ALL CONCRETE SAW-CUT JOINTS AND EXPANSION JOINTS WITH FLOWABLE URETHANE SEALANT, COLOR TO BE GRAY.

CONSULTANT:

IOWA DEPARTMENT OF NATURAL RESOURCES
ENGINEERING SERVICES - WALLACE BUILING
502 E. 9TH ST., DES MOINES, IA 50319-0034
P: 515.725.8200
F: 515.725.8202

EXTERIOR ELEVATIONS AND DETAILS

NEW OFFICE & STORAGE BUILDING FOR:
VIKING LAKE STATE PARK
2780 VIKING LAKE ROAD
STANTON, IA 51573

NO.	BY / DATE	REVISION

DRAWN BY:
PROJECT NUMBER: 17-04-69-02
CHK'D BY:
DATE: 10.24.2018
SHEET No: **A-121**

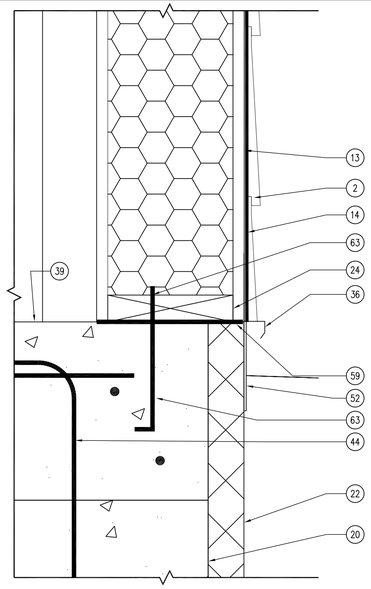

06 DETAIL – WALL SILL PLATE
SCALE: 3" = 1'-0"

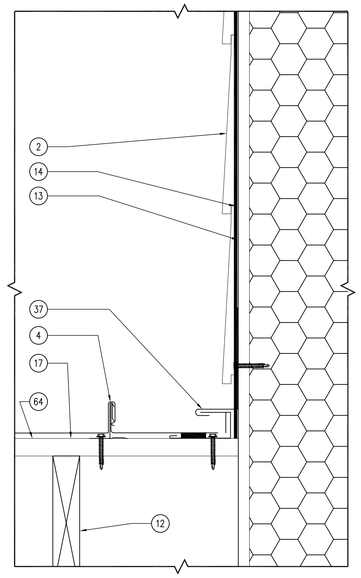

05 DETAIL – ROOF HEAD WALL
SCALE: 3" = 1'-0"

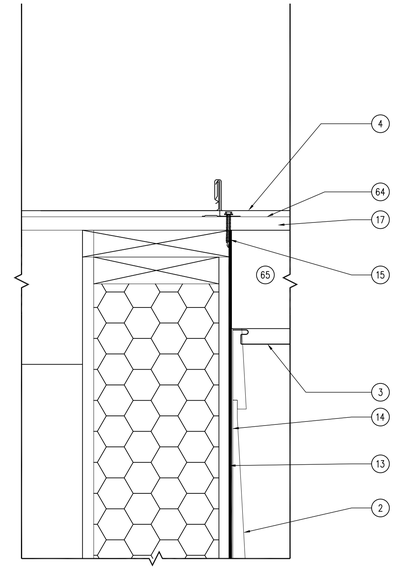

04 DETAIL – WALL TOP PLATE
SCALE: 3" = 1'-0"

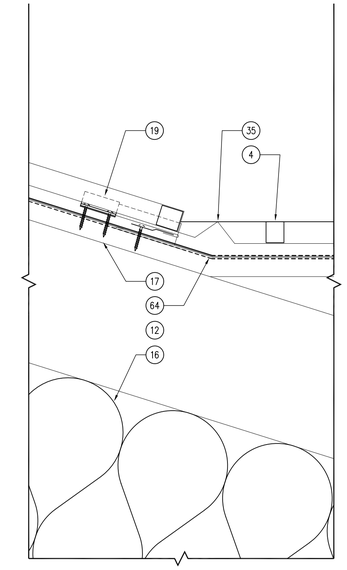

03 DETAIL – ROOF VALLEY FLASHING
SCALE: 3" = 1'-0"

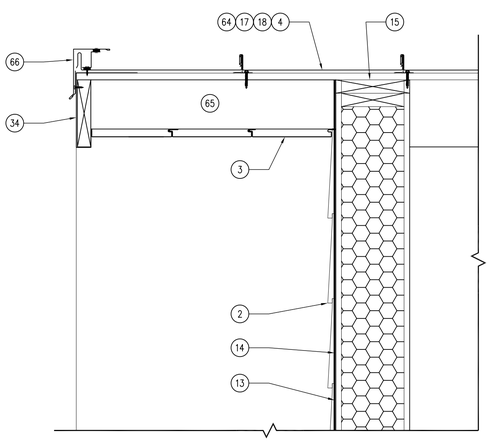

02 DETAIL – ROOF GABLE EDGE
SCALE: 1 1/2" = 1'-0"

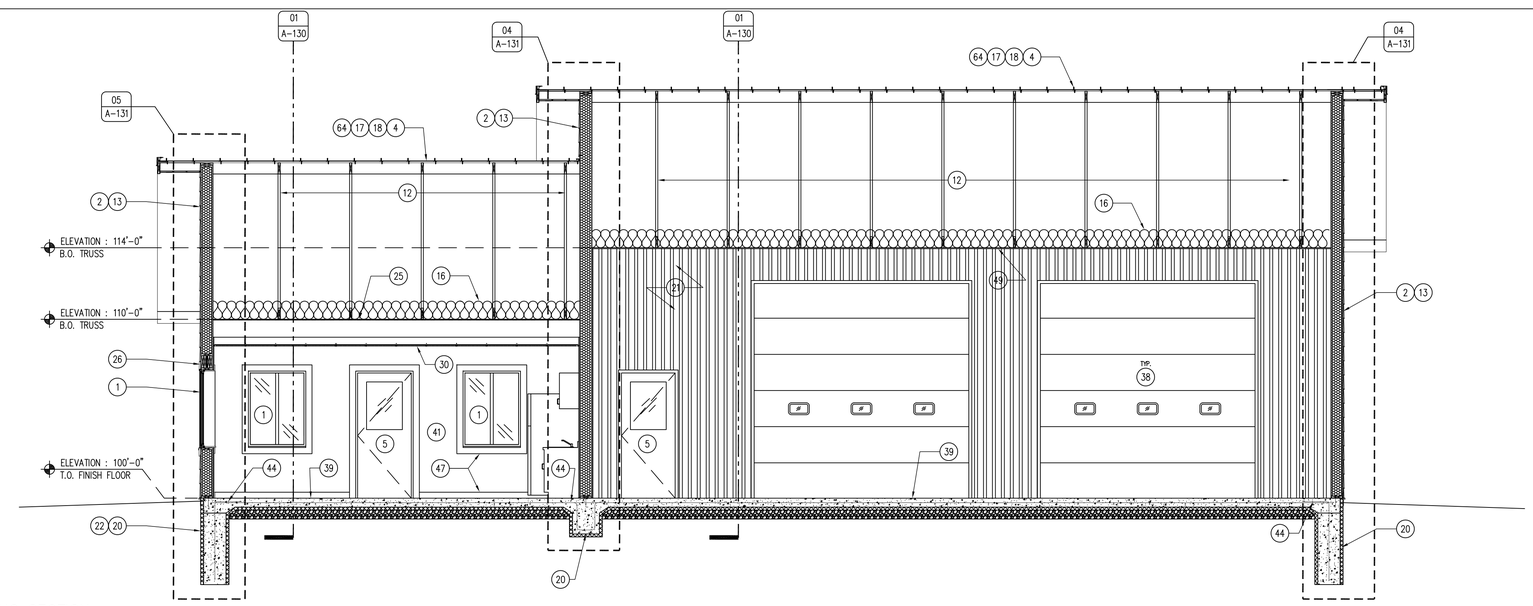

01 BUILDING SECTION
SCALE: 1/4" = 1'-0"

KEYNOTES

1. WINDOW AS SCHEDULED, REFER TO SHEET A-600.
2. 8 ¼" JAMES HARDIE PLANK LAP SIDING, SELECT CEDARMILL, COLOR TO BE TIMBER BARK.
3. METAL VENTED FLUSH-SOFFIT AND FASCIA PANEL. COLOR TO MATCH ROOF.
4. PAC-CLAD SNAP-CLAD METAL ROOF, COLOR TO BE DARK BRONZE.
5. DOOR AS SCHEDULED, REFER TO SHEET A-600.
6. 6" SEAMLESS METAL GUTTER AND DOWNSPOUT SYSTEM WITH SHUR-FLO GUTTER GUARDS.
7. TRAFFIC BOLLARD WITH PLASTIC COVER SLEEVE, REFER TO 03/A-010.
8. S-5! COLORGARD SNOW AND ICE GUARD BAR, PLACE OVER ENTIRE EAVE OF ROOF, BOTH SIDES.
9. 2X BLOCKING AS REQUIRED.
10. INSULATION BAFFLE.
11. TRUSS HANGER CLIP (SPECIFIED BY BUILDING MANUFACTURER).
12. TRUSS (SPECIFIED BY BUILDING MANUFACTURER), FOR DEMONSTRATION PURPOSES ONLY.
13. STRUCTURAL INSULATED PANEL (SIP) WALL, BY BUILDING MANUFACTURER.
14. BUILDING WRAP, PER MANUFACTURER'S RECOMMENDATIONS.
15. TOP PLATE WITH SEALANT ON ALL POINTS, PER BUILDING MANUFACTURER'S RECOMMENDATIONS.
16. R-42 CERTAINTEED FIBER-GLASS BATT ATTIC INSULATION.
17. ¾" PLYWOOD ROOF DECK SHEATHING WITH WATER AND ICE SHIELD OVER ENTIRE ROOF.
18. PAC-CLAD RIDGE VENT AND CAP, MATCH COLOR OF ROOF.
19. ROOF CLIPS, PER MANUFACTURER'S RECOMMENDATIONS.
20. CONCRETE FOOTING/FOUNDATION, REFER TO DETAILS SHEET A-010.
21. 29 GAUGE STEEL LINER PANEL THROUGHOUT ENTIRE HEATED BAY AREA – WHITE.
22. 2" SUB-SLAB RIGID INSULATION UNDER ENTIRE SLAB AND AROUND PERIMETER OF FOUNDATION. TAPE AND SEAL ALL JOINTS.
23. ½" EXPANSION JOINT WITH SEALANT.
24. TREATED SIP SILL PLATE, PER MANUFACTURER'S RECOMMENDATIONS.
25. ⅝" TYPE X GYPSUM BOARD DECK. INSTALL DIRECTLY TO TRUSSES THROUGHOUT OFFICE AREA.
26. 5.5" JAMES HARDIE 4/4 RUSTIC TRIM BOARDS, PRIMED AND PAINTED DARK BRONZE AROUND WINDOWS AND DOORS, COLOR TO MATCH SIDING ON BUILDING CORNERS.
27. 6" SOUND BATT INSULATION.
28. 4" SOUND BATT INSULATION.
29. ADA ACCESSIBLE DOOR THRESHOLD.
30. 24 X 24 ARMSTRONG ULTIMA TEGULAR ACOUSTIC CEILING TILES, REFER TO SHEET A-600.
31. PARTITION WALL AS SCHEDULED, REFER TO SHEET A-002.
32. TRENCH DRAIN, REFER TO PLUMBING DRAWINGS.
33. 6" R-19 BATT INSULATION.
34. 2X FASCIA, WRAP IN BREAK METAL TO MATCH ROOF.
35. METAL VALLEY FLASHING BY ROOFING MANUFACTURER.
36. METAL SILL FLASHING BY BUILDING MANUFACTURER.
37. METAL HEAD-WALL FLASHING BY ROOFING MANUFACTURER.
38. OVERHEAD GARAGE DOOR, REFER TO SHEET A-600.
39. 6" CONCRETE SLAB WITH CONTINUOUS #4 REBAR 24" O.C. BOTH DIRECTIONS, OVER 2" SUB-SLAB RIGID INSULATION, TAPED AND SEALED, WITH 6" SUBBASE.
40. #5 DOWEL, EMBED INTO SLAB 24" MINIMUM.
41. WALL FINISH AS SCHEDULED, REFER TO SHEET A-600.
42. METAL FLASHING, MATCH ROOF COLOR.
43. BACKER ROD AND SEALANT.
44. #5 DOWEL-ROD "J" HOOK, EMBED 36" INTO FOOTING, 18" INTO SLAB.
45. 6X6 ROUGH-SAWN DOUGLAS FIR COLUMN, STAIN WITH TWO COATS TWP 116.
46. HEAVY TIMBER, ROUGH-SAWN DOUGLAS FIR TRUSS, STAIN TWO COATS TWP 116 WITH OVERSIZED METAL BRACKETS AS SHOWN, POWDER COAT BLACK.
47. ¾" X 4" HARD MAPLE TRIM, REFER TO SHEET A-600.
48. 3X DOUGLAS FIR T&G DECKING, TWO COATS OF CLEAR POLYURETHANE.
49. CEILING AS SCHEDULED, REFER TO SHEET A-110.
50. UTILITY SINK, REFER TO PLUMBING DRAWINGS.
51. RUBBER BASE, REFER TO SHEET A-600.
52. CELLULAR PVC PROTECTION BOARD.
53. NOT USED.
54. NOT USED.
55. STONE COLUMN BASE, BEDFACE SURFACE OF VARYING HEIGHTS, BUCKINGHAM RUSTIC ROYAL CHATEAU – THIN VENEER, BY EDEN STONE. MORTAR TO BE WHITE BASED ASTM C270, COLOR TBD.
56. 4" HONED INDIANA LIMESTONE COLUMN CAP, BUFF COLORED, WITH DRIP EDGE.
57. CAST IN PLACE CONCRETE COLUMN FOUNDATION WITH #4 REBAR 12" O.C. ALL DIRECTIONS.
58. 2X6 CEDAR FASCIA TRIM EDGE, STAIN TWO COATS TWP 116.
59. SILL GASKET.
60. ⅜" OVERSIZED MILD-STEEL TRUSS BRACKET, POWDER COAT BLACK. ALL HARDWARE TO BE ¾" GALVANIZED WITH LOCK WASHERS.
61. STEEL COLUMN BASE PLATE, 3/8" MILD-STEEL POWDER COATED BLACK. ANCHOR BOLTS TO BE UNDER COLUMNS, PILOT HOLE CAP AND BASE PLATE, THEN EPOXY SET ANCHOR BOLTS INTO CONCRETE BASE, LEVEL. EMBED MINIMUM 18".
62. CONCRETE WALK WITH SUBBASE, REFER TO CIVIL DRAWINGS.
63. SILL ANCHOR, PER BUILDING MANUFACTURER'S RECOMMENDATIONS.
64. SELF-ADHERED WATER AND ICE SHIELD OVER ENTIRE ROOF DECKING.
65. 2X OUTRIGGER EAVE, PER BUILDING MANUFACTURER.
66. METAL RAKE EDGE FLASHING BY ROOFING MANUFACTURER.
67. 6" CONCRETE APRON SLAB WITH CONTINUOUS #4 REBAR 24" O.C. BOTH DIRECTIONS WITH 4" SUBBASE.
68. STOOP FOOTING, REFER TO 02/A-010.
69. LOUVER VENT, REFER TO MECHANICAL DRAWINGS.
70. 6'-0" DEEP X LENGTH OF BUILDING, SUSPENDED LOFT, TO BE ENGINEERED BY BUILDING MANUFACTURER TO HOLD 100 PSF. SAFETY CHAINS PER OSHA REGULATIONS, 18" AND 36" HEIGHT.

GENERAL NOTES

A. REFER TO FINISH, DOOR & WINDOW SCHEDULE, SHEET A-600.
B. REFER TO REFLECTED CEILING PLAN FOR CEILING HEIGHTS, SHEET A-110.
C. REFER TO INDEX SHEET FOR WALL TYPES, SHEET A-002.
D. FIELD VERIFY ALL DIMENSIONS PRIOR TO CONSTRUCTION, SHEET A-101.
E. FIELD VERIFY ALL EQUIPMENT LOCATIONS FOR ELECTRICAL OUTLET LOCATIONS, REFER TO ELECTRICAL PLAN.
F. CONTRACTOR SHALL HAVE THIS BUILDING, PRIOR TO CONSTRUCTION, PRE-ENGINEERED BY BUILDING SUPPLIER.
G. CONTRACTOR SHALL CAULK ALL CONCRETE SAW-CUT JOINTS AND EXPANSION JOINTS WITH FLOWABLE URETHANE SEALANT, COLOR TO BE GRAY.

CONSULTANT:

IOWA DEPARTMENT OF NATURAL RESOURCES
ENGINEERING SERVICES - WALLACE BUILING
502 E. 9TH ST., DES MOINES, IA 50319-0034
P: 515.725.8200
F: 515.725.8202

EXTERIOR ELEVATIONS AND ROOF DETAILS

NEW OFFICE & STORAGE BUILDING FOR:
VIKING LAKE STATE PARK

2780 VIKING LAKE ROAD
STANTON, IA 51573

NO.	BY	DATE	REVISION

DRAWN BY:
PROJECT NUMBER: 17-04-69-02
CHK'D BY:
DATE: 10.24.2018
SHEET No: **A-130**

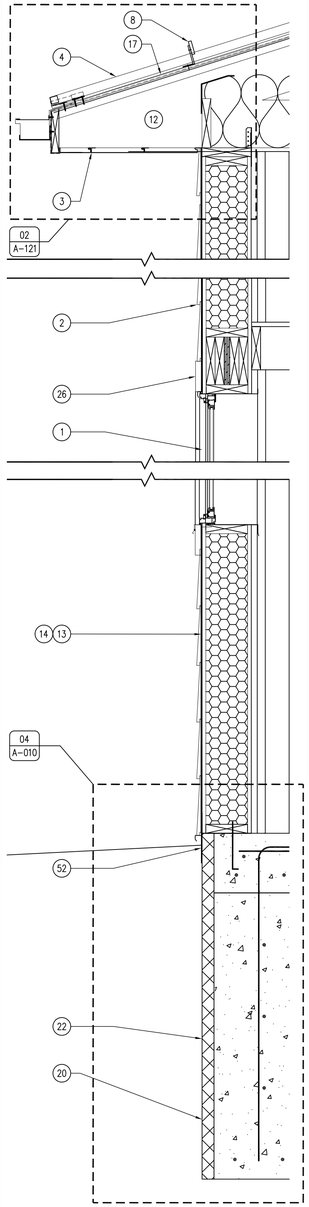

05 WALL SECTION
SCALE: 1" = 1'-0"

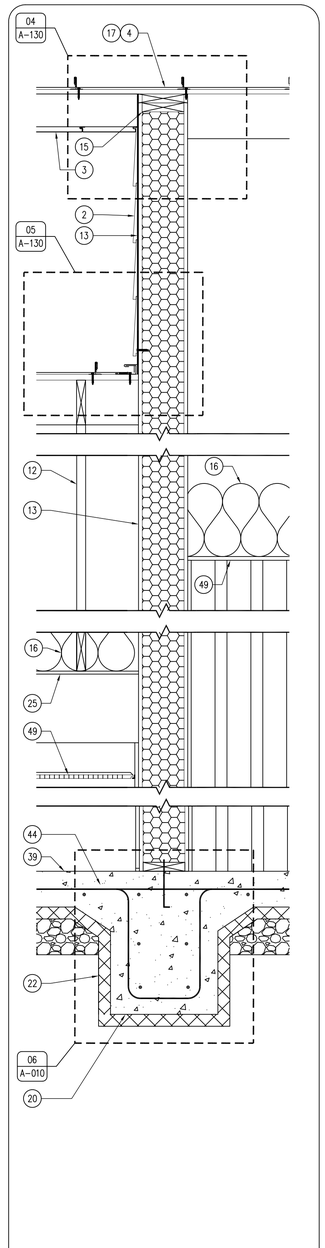

04 WALL SECTION
SCALE: 1" = 1'-0"

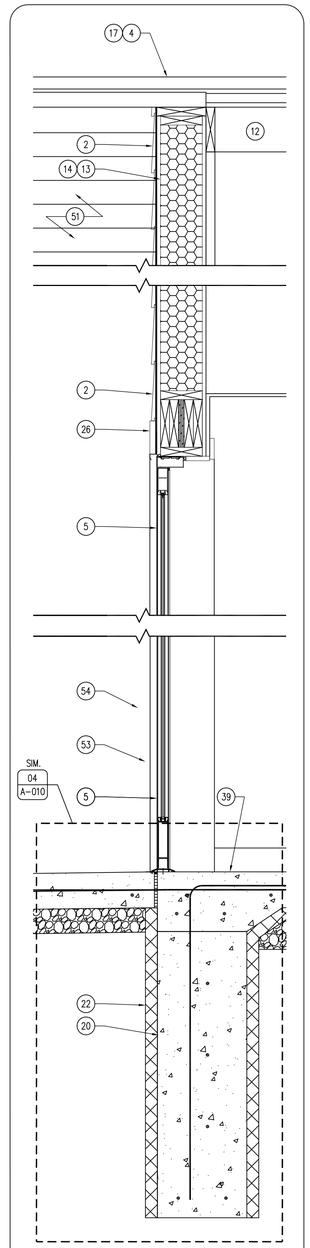

03 WALL SECTION
SCALE: 1" = 1'-0"

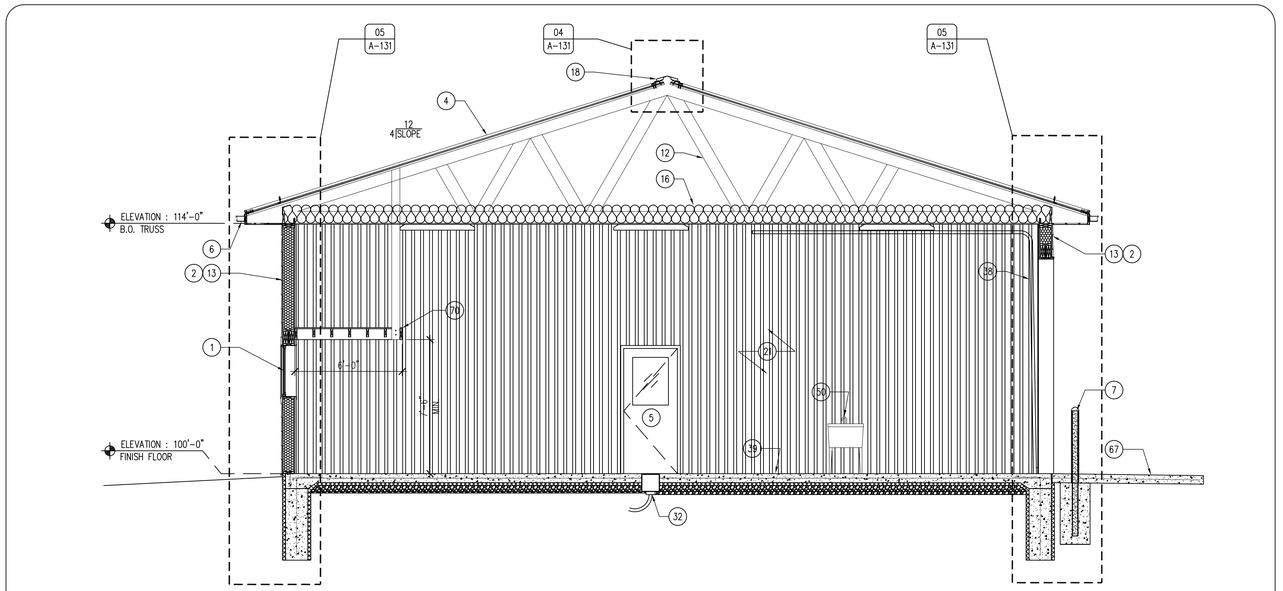

02 EXTERIOR ELEVATION
SCALE: 1/4" = 1'-0"

WEST ELEVATION

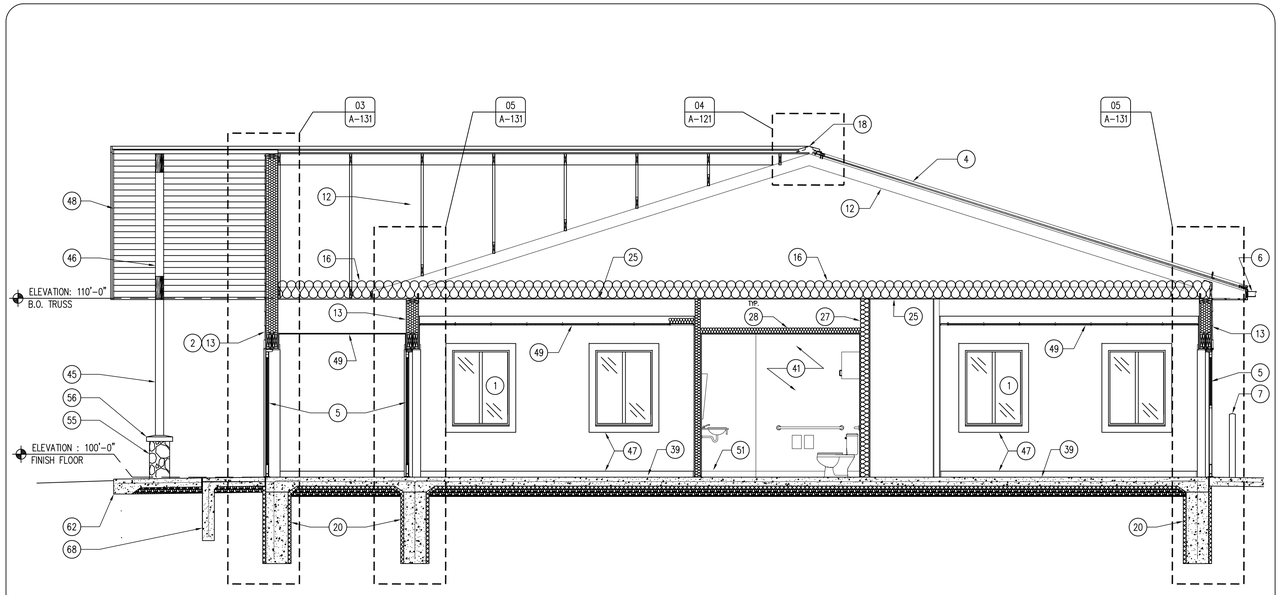

01 EXTERIOR ELEVATION
SCALE: 1/4" = 1'-0"

EAST ELEVATION

KEYNOTES

1. WINDOW AS SCHEDULED, REFER TO SHEET A-600.
2. 8 ¼" JAMES HARDIE PLANK LAP SIDING, SELECT CEDARMILL, COLOR TO BE TIMBER BARK.
3. METAL VENTED FLUSH-SOFFIT AND FASCIA PANEL. COLOR TO MATCH ROOF.
4. PAC-CLAD SNAP-CLAD METAL ROOF, COLOR TO BE DARK BRONZE.
5. DOOR AS SCHEDULED, REFER TO SHEET A-600.
6. 6" SEAMLESS METAL GUTTER AND DOWNSPOUT SYSTEM WITH SHUR-FLO GUTTER GUARDS.
7. TRAFFIC BOLLARD WITH PLASTIC COVER SLEEVE, REFER TO 03/A-010.
8. S-5! COLORGARD SNOW AND ICE GUARD BAR, PLACE OVER ENTIRE EAVE OF ROOF, BOTH SIDES.
9. 2X BLOCKING AS REQUIRED.
10. INSULATION BAFFLE.
11. TRUSS HANGER CLIP (SPECIFIED BY BUILDING MANUFACTURER).
12. TRUSS (SPECIFIED BY BUILDING MANUFACTURER), FOR DEMONSTRATION PURPOSES ONLY.
13. STRUCTURAL INSULATED PANEL (SIP) WALL, BY BUILDING MANUFACTURER.
14. BUILDING WRAP, PER MANUFACTURER'S RECOMMENDATIONS.
15. TOP PLATE WITH SEALANT ON ALL POINTS, PER BUILDING MANUFACTURER'S RECOMMENDATIONS.
16. R-42 CERTAINTEED FIBER-GLASS BATT ATTIC INSULATION.
17. ¾" PLYWOOD ROOF DECK SHEATHING WITH WATER AND ICE SHIELD OVER ENTIRE ROOF.
18. PAC-CLAD RIDGE VENT AND CAP, MATCH COLOR OF ROOF.
19. ROOF CLIPS, PER MANUFACTURER'S RECOMMENDATIONS.
20. CONCRETE FOOTING/FOUNDATION, REFER TO DETAILS SHEET A-010.
21. 29 GAUGE STEEL LINER PANEL THROUGHOUT ENTIRE HEATED BAY AREA – WHITE.
22. 2" SUB-SLAB RIGID INSULATION UNDER ENTIRE SLAB AND AROUND PERIMETER OF FOUNDATION. TAPE AND SEAL ALL JOINTS.
23. ½" EXPANSION JOINT WITH SEALANT.
24. TREATED SIP SILL PLATE, PER MANUFACTURER'S RECOMMENDATIONS.
25. ⅝" TYPE X GYPSUM BOARD DECK. INSTALL DIRECTLY TO TRUSSES THROUGHOUT OFFICE AREA.
26. 5.5" JAMES HARDIE 4/4 RUSTIC TRIM BOARDS, PRIMED AND PAINTED DARK BRONZE AROUND WINDOWS AND DOORS, COLOR TO MATCH SIDING ON BUILDING CORNERS.
27. 6" SOUND BATT INSULATION.
28. 4" SOUND BATT INSULATION.
29. ADA ACCESSIBLE DOOR THRESHOLD.
30. 24 X 24 ARMSTRONG ULTIMA TEGULAR ACOUSTIC CEILING TILES, REFER TO SHEET A-600.
31. PARTITION WALL AS SCHEDULED, REFER TO SHEET A-002.
32. TRENCH DRAIN, REFER TO PLUMBING DRAWINGS.
33. 6" R-19 BATT INSULATION.
34. 2X FASCIA, WRAP IN BREAK METAL TO MATCH ROOF.
35. METAL VALLEY FLASHING BY ROOFING MANUFACTURER.
36. METAL SILL FLASHING BY BUILDING MANUFACTURER.
37. METAL HEAD-WALL FLASHING BY ROOFING MANUFACTURER.
38. OVERHEAD GARAGE DOOR, REFER TO SHEET A-600.
39. 6" CONCRETE SLAB WITH CONTINUOUS #4 REBAR 24" O.C. BOTH DIRECTIONS, OVER 2" SUB-SLAB RIGID INSULATION, TAPED AND SEALED, WITH 6" SUBBASE.
40. #5 DOWEL, EMBED INTO SLAB 24" MINIMUM.
41. WALL FINISH AS SCHEDULED, REFER TO SHEET A-600.
42. METAL FLASHING, MATCH ROOF COLOR.
43. BACKER ROD AND SEALANT.
44. #5 DOWEL-ROD "J" HOOK, EMBED 36" INTO FOOTING, 18" INTO SLAB.
45. 6X6 ROUGH-SAWN DOUGLAS FIR COLUMN, STAIN WITH TWO COATS TWP 116.
46. HEAVY TIMBER, ROUGH-SAWN DOUGLAS FIR TRUSS, STAIN TWO COATS TWP 116 WITH OVERSIZED METAL BRACKETS AS SHOWN, POWDER COAT BLACK.
47. ¾" X 4" HARD MAPLE TRIM, REFER TO SHEET A-600.
48. 3X DOUGLAS FIR T&G DECKING, TWO COATS OF CLEAR POLYURETHANE.
49. CEILING AS SCHEDULED, REFER TO SHEET A-110.
50. UTILITY SINK, REFER TO PLUMBING DRAWINGS.
51. RUBBER BASE, REFER TO SHEET A-600.
52. CELLULAR PVC PROTECTION BOARD.
53. NOT USED.
54. NOT USED.
55. STONE COLUMN BASE, BEDFACE SURFACE OF VARYING HEIGHTS, BUCKINGHAM RUSTIC ROYAL CHATEAU – THIN VENEER, BY EDEN STONE. MORTAR TO BE WHITE BASED ASTM C270, COLOR TBD.
56. 4" HONED INDIANA LIMESTONE COLUMN CAP, BUFF COLORED, WITH DRIP EDGE.
57. CAST IN PLACE CONCRETE COLUMN FOUNDATION WITH #4 REBAR 12" O.C. ALL DIRECTIONS.
58. 2X6 CEDAR FASCIA TRIM EDGE, STAIN TWO COATS TWP 116.
59. SILL GASKET.
60. ⅜" OVERSIZED MILD-STEEL TRUSS BRACKET, POWDER COAT BLACK. ALL HARDWARE TO BE ¾" GALVANIZED WITH LOCK WASHERS.
61. STEEL COLUMN BASE PLATE, 3/8" MILD-STEEL POWDER COATED BLACK. ANCHOR BOLTS TO BE UNDER COLUMNS, PILOT HOLE CAP AND BASE PLATE, THEN EPOXY SET ANCHOR BOLTS INTO CONCRETE BASE, LEVEL. EMBED MINIMUM 18".
62. CONCRETE WALK WITH SUBBASE, REFER TO CIVIL DRAWINGS.
63. SILL ANCHOR, PER BUILDING MANUFACTURER'S RECOMMENDATIONS.
64. SELF-ADHERED WATER AND ICE SHIELD OVER ENTIRE ROOF DECKING.
65. 2X OUTRIGGER EAVE, PER BUILDING MANUFACTURER.
66. METAL RAKE EDGE FLASHING BY ROOFING MANUFACTURER.
67. 6" CONCRETE APRON SLAB WITH CONTINUOUS #4 REBAR 24" O.C. BOTH DIRECTIONS WITH 4" SUBBASE.
68. STOOP FOOTING, REFER TO 02/A-010.
69. LOUVER VENT, REFER TO MECHANICAL DRAWINGS.
70. 6'-0" DEEP X LENGTH OF BUILDING, SUSPENDED LOFT, TO BE ENGINEERED BY BUILDING MANUFACTURER TO HOLD 100 PSF. SAFETY CHAINS PER OSHA REGULATIONS, 18" AND 36" HEIGHT.

GENERAL NOTES

A. REFER TO FINISH, DOOR & WINDOW SCHEDULE, SHEET A-600.
B. REFER TO REFLECTED CEILING PLAN FOR CEILING HEIGHTS, SHEET A-110.
C. REFER TO INDEX SHEET FOR WALL TYPES, SHEET A-002.
D. FIELD VERIFY ALL DIMENSIONS PRIOR TO CONSTRUCTION, SHEET A-101.
E. FIELD VERIFY ALL EQUIPMENT LOCATIONS FOR ELECTRICAL OUTLET LOCATIONS, REFER TO ELECTRICAL PLAN.
F. CONTRACTOR SHALL HAVE THIS BUILDING, PRIOR TO CONSTRUCTION, PRE-ENGINEERED BY BUILDING SUPPLIER.
G. CONTRACTOR SHALL CAULK ALL CONCRETE SAW-CUT JOINTS AND EXPANSION JOINTS WITH FLOWABLE URETHANE SEALANT, COLOR TO BE GRAY.

CONSULTANT:

IOWA DEPARTMENT OF NATURAL RESOURCES
ENGINEERING SERVICES - WALLACE BUILING
502 E. 9TH ST., DES MOINES, IA 50319-0034
P: 515.725.8200
F: 515.725.8202

BUILDING SECTIONS

NEW OFFICE & STORAGE BUILDING FOR:
VIKING LAKE STATE PARK
2780 VIKING LAKE ROAD
STANTON, IA 51573

NO.	BY / DATE	REVISION

DRAWN BY:
PROJECT NUMBER: 17-04-69-02
CHK'D BY:
DATE: 10.24.2018
SHEET No: **A-131**

07 NOT USED
SCALE: 1/4" = 1'-0"

06 NOT USED
SCALE: 1/4" = 1'-0"

05 NOT USED
SCALE: 1/4" = 1'-0"

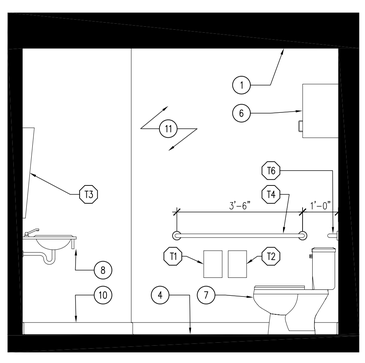

04 RESTROOM ELEVATION
SCALE: 1/2" = 1'-0"

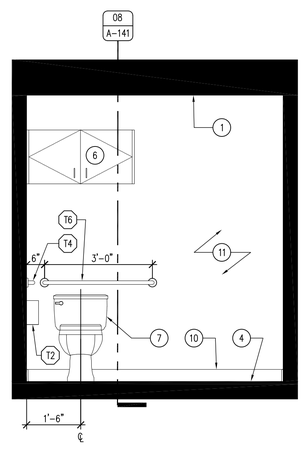

03 RESTROOM ELEVATION
SCALE: 1/2" = 1'-0"

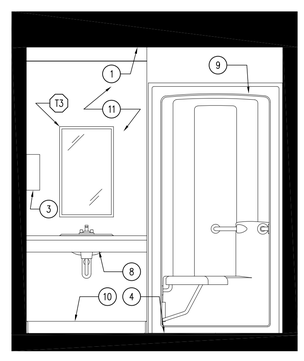

02 RESTROOM ELEVATION
SCALE: 1/2" = 1'-0"

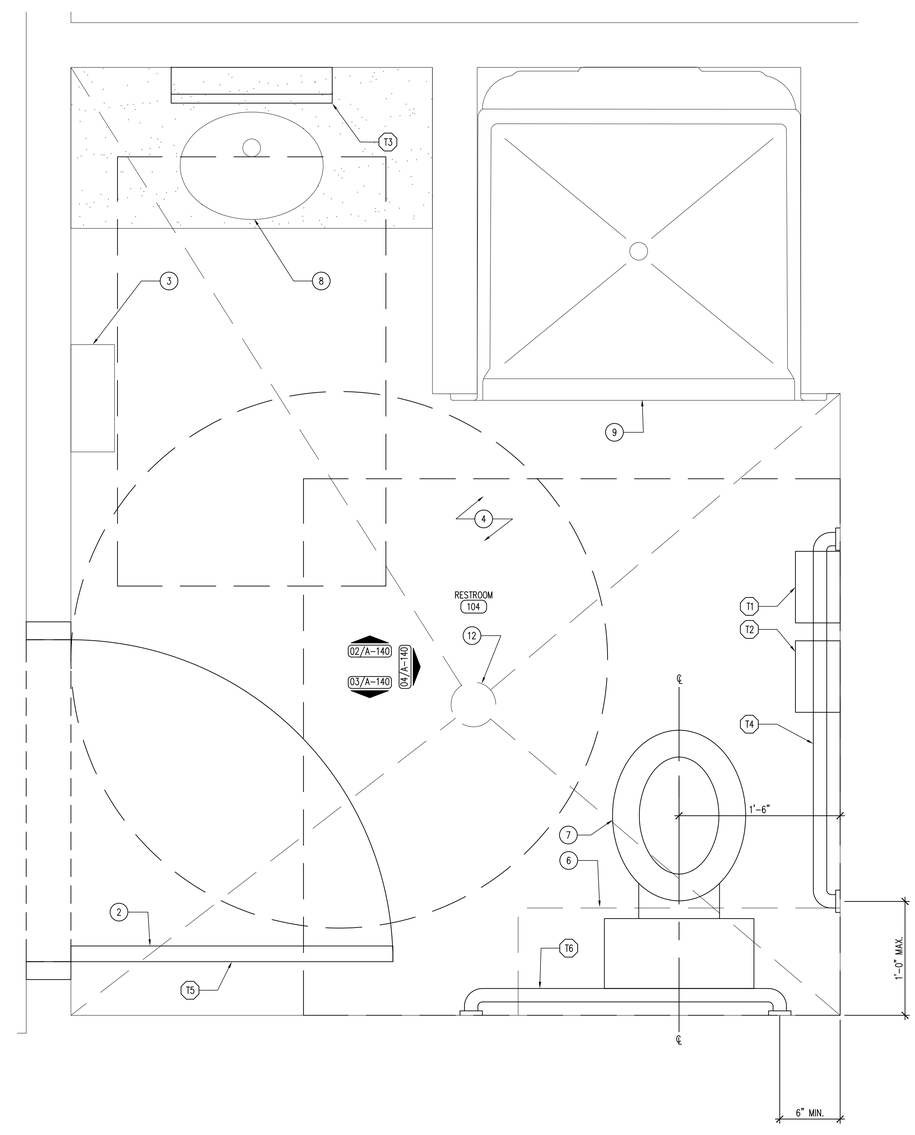

01 ENLARGED FLOOR PLAN
SCALE: 1 1/2" = 1'-0"

TOILET ACCESSORY SCHEDULE

ALL MODEL NUMBERS BASED ON BOBRICK "CONTURA SERIES" WASHROOM EQUIPMENT UNLESS OTHERWISE NOTED.

T-1 SURFACE MOUNTED SANITARY NAPKIN DISPOSAL
B-270

T-2 SURFACE MOUNTED TOILET TISSUE DISPENSER
B-685

T-3 WELDED FRAMED MIRROR – MOUNT BOTTOM EDGE OF MIRROR 40" AFF
B-290 2448

T-4 42" LONG X 1-1/2" DIAMETER, CONCEALED MOUNTING, STRAIGHT GRAB BAR
B-6806 x 42

T-5 COAT HOOK – CENTER ON DOOR
B-6717

T-6 36" LONG X 1-1/2" DIAMETER, CONCEALED MOUNTING, STRAIGHT GRAB BAR
B-6806 x 36

KEYNOTES

1. CEILING AS SCHEDULED, REFER TO REFLECTED CEILING PLAN SHEET A-110.
2. DOOR AS SCHEDULED, REFER TO SHEET A-600.
3. HAND DRYER, REFER TO MECHANICAL DRAWINGS.
4. FINISH FLOOR AS SCHEDULED, REFER TO FINISH SCHEDULE SHEET A-600.
5. NOT USED.
6. ¾" PLYWOOD CABINET WITH HARDWOOD VENEER (WD-1) ON CONCEALED HINGES, PROVIDE DECORATIVE HARDWARE WIRE PULLS (DARK BRONZE).
7. ADA COMPLIANT TOILET AS SCHEDULED, REFER TO PLUMBING DRAWINGS.
8. ADA COMPLIANT INTEGRAL LAVATORY AND SOLID SURFACE COUNTER (SS-1) AS SHOWN, WITH SCALD GUARDS. REFER TO PLUMBING DRAWINGS.
9. ADA COMPLIANT SHOWER SURROUND WITH TRANSLUCENT DOOR AS SCHEDULED. REFER TO PLUMBING DRAWINGS.
10. RUBBER WALL BASE AS SCHEDULED, REFER TO FINISH SCHEDULE SHEET A-600.
11. WALL FINISH AS SCHEDULED, REFER TO FINISH SCHEDULE SHEET A-600.
12. FLOOR DRAIN, REFER TO PLUMBING DRAWINGS.

GENERAL NOTES

A. REFER TO FINISH, DOOR & WINDOW SCHEDULE, SHEET A-600.
B. REFER TO REFLECTED CEILING PLAN FOR CEILING HEIGHTS, SHEET A-110.
C. REFER TO INDEX SHEET FOR WALL TYPES, SHEET A-002.
D. FIELD VERIFY ALL DIMENSIONS PRIOR TO CONSTRUCTION, SHEET A-101.
E. FIELD VERIFY ALL EQUIPMENT LOCATIONS FOR ELECTRICAL OUTLET LOCATIONS, REFER TO ELECTRICAL PLAN.
F. CONTRACTOR SHALL HAVE THIS BUILDING, PRIOR TO CONSTRUCTION, PRE-ENGINEERED BY BUILDING SUPPLIER.
G. ALL PLYWOOD PRODUCTS TO HAVE NO ADDED UREA-FORMALDEHYDE (NAUF).
H. ALL PLYWOOD CABINET AND DRAWER SURFACES TO HAVE VOC FREE CLEAR SATIN FINISH.

CONSULTANT:

IOWA DEPARTMENT OF NATURAL RESOURCES
ENGINEERING SERVICES - WALLACE BUILING
502 E. 9TH ST., DES MOINES, IA 50319-0034
P: 515.725.8200
F: 515.725.8202

ENLARGED PLANS AND ELEVATIONS

NEW OFFICE & STORAGE BUILDING FOR:
VIKING LAKE STATE PARK
2780 VIKING LAKE ROAD
STANTON, IA 51573

NO.	BY DATE	REVISION

DRAWN BY:
PROJECT NUMBER: 17-04-69-02
CHK'D BY:
DATE: 10.24.2018
SHEET No: A-140

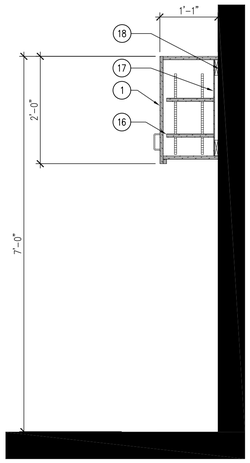

08 MILLWORK SECTION
SCALE: 3/4" = 1'-0"

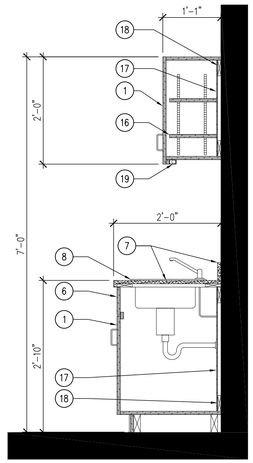

07 MILLWORK SECTION
SCALE: 3/4" = 1'-0"

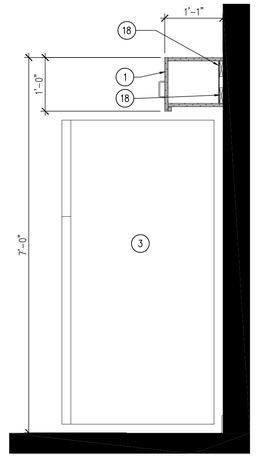

06 MILLWORK SECTION
SCALE: 3/4" = 1'-0"

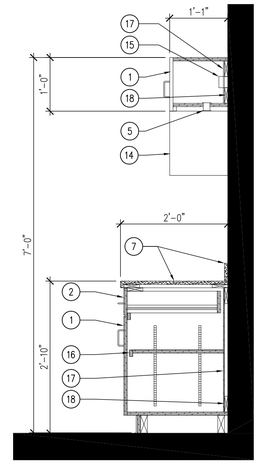

05 MILLWORK SECTION
SCALE: 3/4" = 1'-0"

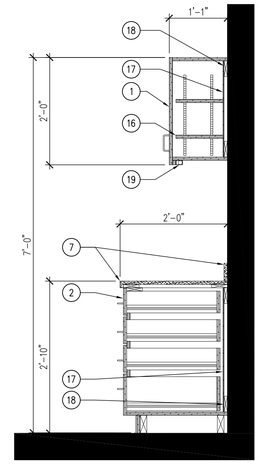

04 MILLWORK SECTION
SCALE: 3/4" = 1'-0"

03 NOT USED
SCALE: 1/2" = 1'-0"

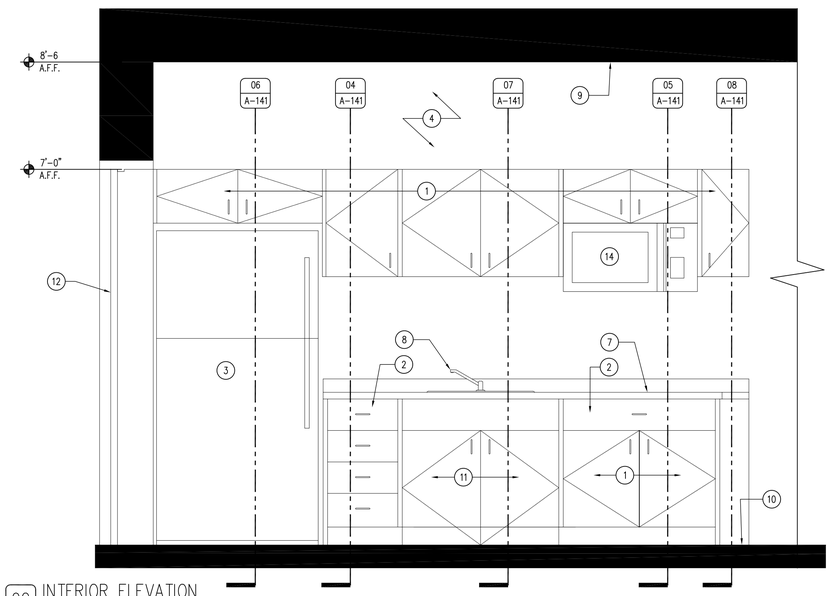

02 INTERIOR ELEVATION
SCALE: 3/4" = 1'-0"

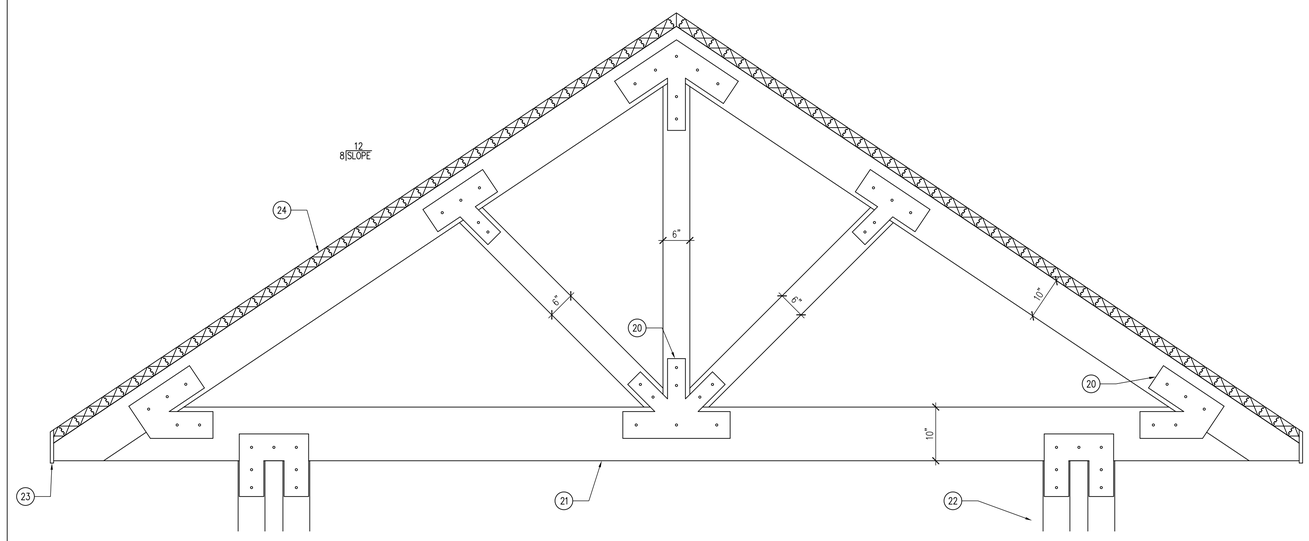

01 ENLARGED TRUSS ELEVATION
SCALE: 3/4" = 1'-0"

KEYNOTES

1. ¾" PLYWOOD DOOR ON CONCEALED HINGES WITH WOOD VENEER (WD-1). PROVIDE DECORATIVE HARDWARE WIRE PULLS (DARK BRONZE). REFER TO FINISH SCHEDULE SHEET A-600.
2. ¾" PLYWOOD DRAWER WITH UNDERMOUNT SLIDES WITH WOOD VENEER (WD-1). PROVIDE DECORATIVE HARDWARE WIRE PULLS (DARK BRONZE), REFER TO FINISH SCHEDULE SHEET A-600.
3. REFRIGERATOR BY OWNER.
4. WALL FINISH AS SCHEDULED, REFER TO SHEET A-600.
5. GROMMET HOLE WITH PLASTIC GROMMET, SIZE ACCORDING TO MICROWAVE MANUFACTURER'S RECOMMENDATIONS.
6. ¾" PLYWOOD VALENCE WITH WOOD VENEER (WD-1). REFER TO FINISH SCHEDULE SHEET A-600.
7. ¾" SOLID SURFACE TOP (SS-1). REFER TO FINISH SCHEDULE SHEET A-600.
8. TWO-BASIN STAINLESS STEEL UNDER-MOUNT SINK, REFER TO PLUMBING DRAWINGS.
9. CEILING FINISH AS SCHEDULED. REFER TO REFLECTED CEILING PLAN SHEET A-110.
10. FLOOR AS SCHEDULED. REFER TO FINISH SCHEDULE SHEET A-600.
11. ADA COMPLIANT UNDER-SINK DOORS ON CONCEALED HINGES WITH WOOD VENEER (WD-1). PROVIDE DECORATIVE HARDWARE WIRE PULLS, REFER TO FINISH SCHEDULE SHEET A-600.
12. DOOR AS SCHEDULED, REFER TO DOOR SCHEDULE SHEET A-600.
13. NOT USED.
14. MICROWAVE AND FAN EXHAUST COMBO SET BY OWNER.
15. ELECTRICAL OUTLET, REFER TO ELECTRICAL DRAWINGS.
16. ¾" PLYWOOD SHELF WITH PLASTIC LAMINATE (PL-1) AND HARDWOOD EDGE BANDING, PROVIDE ADJUSTABLE HARDWARE.
17. ¾" PLYWOOD BACKER BOARD WITH PLASTIC LAMINATE (PL-1).
18. 2X WOOD BLOCKING AS REQUIRED.
19. UNDER-CABINET LIGHT, REFER TO ELECTRICAL DRAWINGS.
20. ⅜" STEEL CONNECTOR PLATE, EACH SIDE, AS SHOWN, POWDER COAT BLACK, WITH ½" GALVANIZED CARRIAGE BOLTS WITH LOCK-WASHERS AND NUTS.
21. 6X ROUGH-SAWN DOUGLAS FIR TRUSS, WITH TWO COATS TWP STAIN 116. REFER TO DIMENSIONS.
22. 6X6 ROUGH SAWN DOUGLAS FIR COLUMNS, TWO COATS TWP STAIN 116.
23. 2X FASCIA TO MATCH ROOF FASCIA, WRAP IN METAL TO MATCH ROOF.
24. 3X DOUGLAS FIR T&G ROOF DECKING, TWO COATS CLEAR POLYURETHANE BOTTOM SIDE (DO NOT STAIN). INSTALL WATER & ICE SHIELD ACROSS ENTIRE ROOF PRIOR TO INSTALL METAL ROOF.

GENERAL NOTES

A. REFER TO FINISH, DOOR & WINDOW SCHEDULE, SHEET A-600.
B. REFER TO REFLECTED CEILING PLAN FOR CEILING HEIGHTS, SHEET A-110.
C. REFER TO INDEX SHEET FOR WALL TYPES, SHEET A-002.
D. FIELD VERIFY ALL DIMENSIONS PRIOR TO CONSTRUCTION, SHEET A-101.
E. FIELD VERIFY ALL EQUIPMENT LOCATIONS FOR ELECTRICAL OUTLET LOCATIONS, REFER TO ELECTRICAL PLAN.
F. CONTRACTOR SHALL HAVE THIS BUILDING, PRIOR TO CONSTRUCTION, PRE-ENGINEERED BY BUILDING SUPPLIER.
G. ALL PLYWOOD PRODUCTS TO HAVE NO ADDED UREA-FORMALDEHYDE (NAUF).
H. ALL PLYWOOD CABINET AND DRAWER SURFACES TO HAVE VOC FREE CLEAR SATIN FINISH.

CONSULTANT:

IOWA DEPARTMENT OF NATURAL RESOURCES
ENGINEERING SERVICES - WALLACE BUILING
502 E. 9TH ST., DES MOINES, IA 50319-0034
P: 515.725.8200
F: 515.725.8202

INTERIOR ELEVATIONS & MILLWORK SECTIONS

NEW OFFICE & STORAGE BUILDING FOR:
VIKING LAKE STATE PARK
2780 VIKING LAKE ROAD
STANTON, IA 51573

NO.	BY / DATE	REVISION

DRAWN BY:
PROJECT NUMBER: 17-04-69-02
CHK'D BY:
DATE: 10.24.2018
SHEET No: A-141

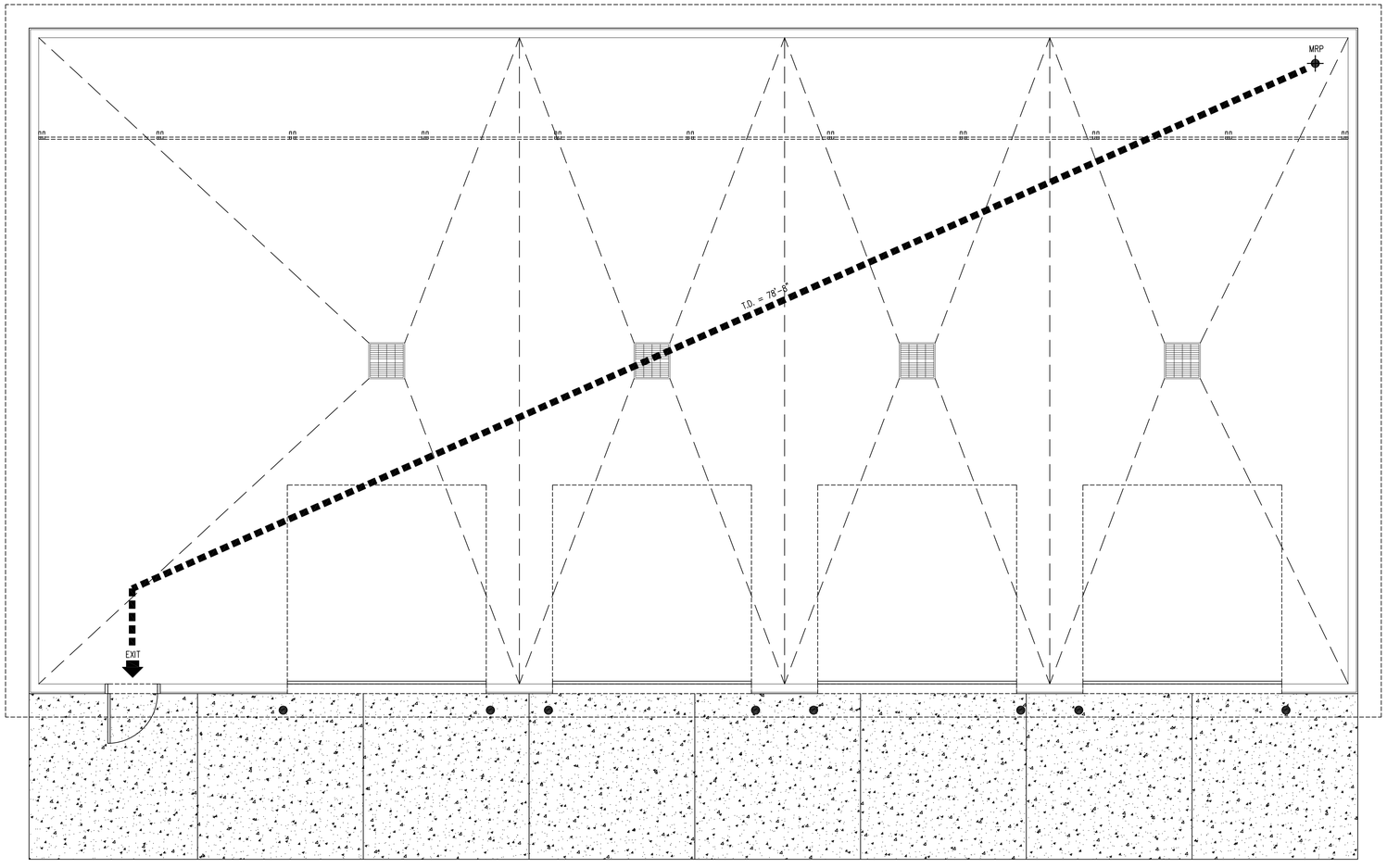

01 LIFE SAFETY PLAN
SCALE: 1/4" = 1'-0"

CODE SUMMARY

BUILDING AREA	3,200 GSF
TENANT AREA	3,073 NSF
CONSTRUCTION TYPE	V-B WITHOUT SPRINKLER SYSTEM
OCCUPANCY	GROUP S-1 – STORAGE

	REQUIRED	PROVIDED
ALLOWABLE BLDG AREA (IBC TBL 503)	17,500 SF	3,200 SF
HEIGHT LIMITATION (IBC TBL 503)	2 STORIES (40')	1 STORIES (20')
AUTOMATIC SPRINKLER SYSTEM (NFPA 13)	NO	NO
EXIT ACCESS TRAVEL DISTANCE (IBC 1016.1)	200'-0"	78'-8"
EXIT ACCESS DOORWAYS (IBC TBL 1019.1)	1	1
EGRESS WIDTH PER OCCUPANT (IBC TBL 1005.1) LEVEL [.2"]	(.2") X 13 = 2.6"	2 DOORS @ 36"= 72"

LIFE SAFETY LEGEND

SYMBOL	DESCRIPTION	LINE TYPE
D.E.	EXIT TO EXIT IN LINEAR FEET	
T.D.	TRAVEL DISTANCE FROM M.R.P.	
D.D.	DIAGONAL DISTANCE	
	EXIT LIGHT	
M.R.P.	MOST REMOTE POINT	
	EXIT / ENTRY	
FEC	FIRE EXTINGUISHER	

GENERAL NOTES

A. INFORMATION PROVIDED ON THE LIFE SAFETY PLAN INDICATES EGRESS REQUIREMENTS.
B. ALL CODE REFERENCES ARE FROM INTERNATIONAL BUILDING CODE, W/ AMENDMENTS UNLESS OTHERWISE NOTED

CONSULTANT:

IOWA DEPARTMENT OF NATURAL RESOURCES
ENGINEERING SERVICES - WALLACE BUILING
502 E. 9TH ST., DES MOINES, IA 50319-0034
P: 515.725.8200
F: 515.725.8202

LIFE SAFETY PLAN

NEW OFFICE & STORAGE BUILDING FOR:
VIKING LAKE STATE PARK

2780 VIKING LAKE ROAD
STANTON, IA 51573

NO.	BY DATE	REVISION

DRAWN BY:
PROJECT NUMBER: 17-04-69-02
CHK'D BY:
DATE: 10.24.2018
SHEET No: A-202

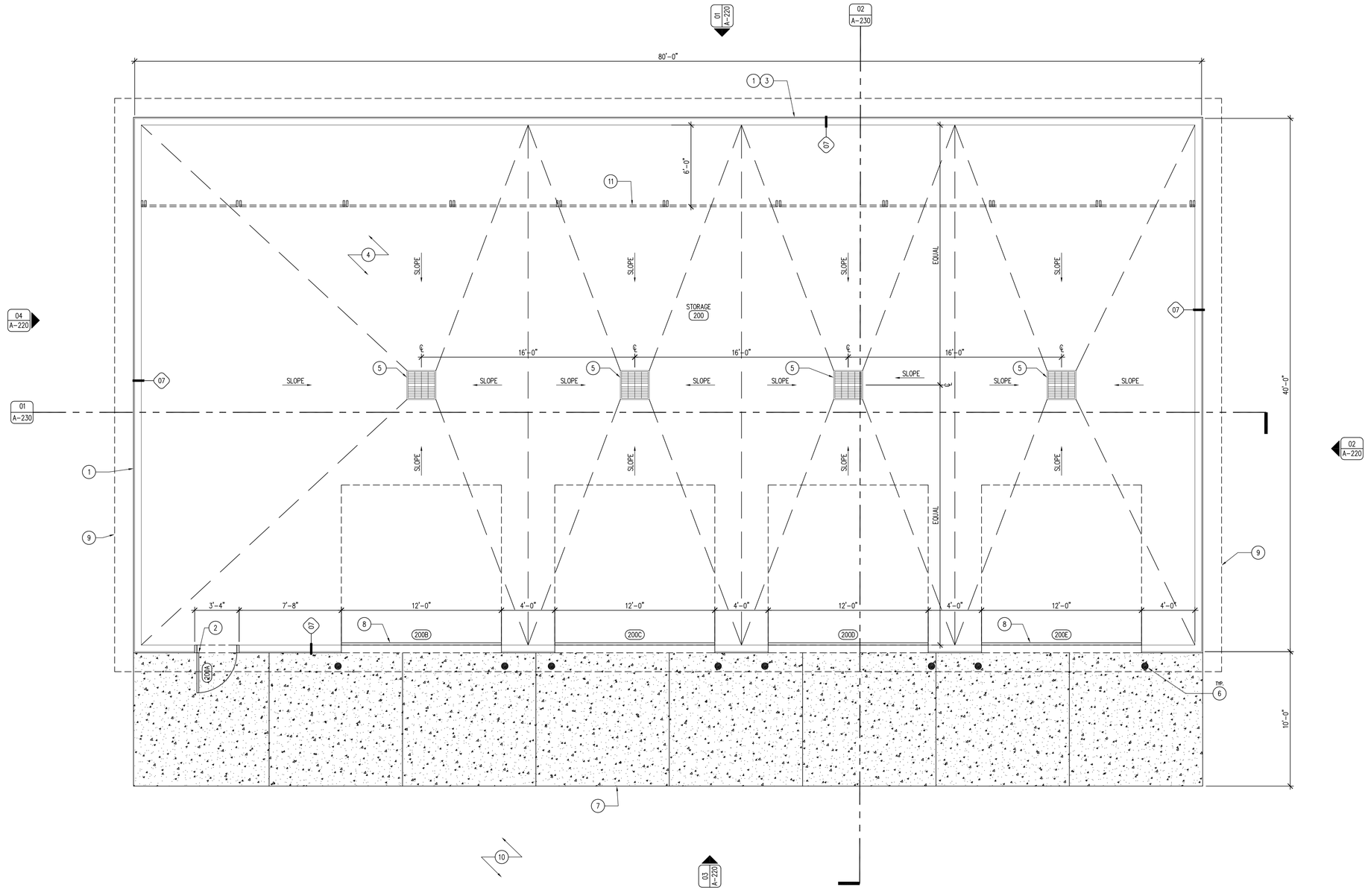

01 REFERENCE FLOOR PLAN
SCALE: 1/4" = 1'-0"

KEYNOTES

1. POST-FRAME BUILDING WITH 26 GAUGE SIDING, COLOR TBD, REFER TO SHEET A-600.
2. DOOR AS SCHEDULED, REFER TO SHEET A-600.
3. REAR OF BUILDING TO RECEIVE 48" POLYCARBONATE WINDOW ACROSS ENTIRE LENGTH OF BUILDING.
4. 6" CONCRETE BUILDING SLAB OVER A VAPOR BARRIER AND 6" SUBBASE, #4 REBAR 24" O.C. BOTH DIRECTIONS.
5. 24"X24" SQUARE HEAVY-DUTY STEEL GRATE DRAIN, CAST INTO CONCRETE SLAB WITH 4'-0" DEEP OF CLEAN RIVER ROCK, WRAP IN TWO (2) LAYERS OF GEOFABRIC DRAIN CLOTH.
6. STEEL TRAFFIC BOLLARD WITH PLASTIC COVER SLEEVE, REFER TO DETAIL 03/A-010.
7. 6" CONCRETE APRON OVER 6" SUBBASE, #4 REBAR 24" O.C. BOTH DIRECTIONS.
8. OVERHEAD GARAGE DOOR, REFER TO DOOR SCHEDULE SHEET A-600.
9. ROOF LINE ABOVE.
10. CRUSHED LIMESTONE EQUIPMENT YARD, REFER TO CIVIL PLANS.
11. 6'-0" DEEP X LENGTH OF BUILDING, SUSPENDED LOFT, TO BE ENGINEERED BY BUILDING MANUFACTURER TO HOLD 100 PSF. SAFETY CHAINS PER OSHA REGULATIONS, 18" AND 36" HEIGHT.

GENERAL NOTES

A. REFER TO FINISH & DOOR SCHEDULE, SHEET A-600.
B. REFER TO INDEX SHEET FOR WALL TYPES, A-002.
C. REFER TO MECHANICAL, ELECTRICAL, PLUMBING SHEETS FOR MORE INFORMATION.
D. FIELD VERIFY ALL DIMENSIONS PRIOR TO CONSTRUCTION.
E. THIS BUILDING SHALL BE PRE-ENGINEERED BY BUILDING SUPPLIER.

CONSULTANT:

IOWA DEPARTMENT OF NATURAL RESOURCES
ENGINEERING SERVICES - WALLACE BUILING
502 E. 9TH ST., DES MOINES, IA 50319-0034
P: 515.725.8200
F: 515.725.8202

REFERENCE FLOOR PLAN

NEW OFFICE & STORAGE BUILDING FOR:
VIKING LAKE STATE PARK

2780 VIKING LAKE ROAD
STANTON, IA 51573

NO.	BY / DATE	REVISION

DRAWN BY:
PROJECT NUMBER: 17-04-69-02
CHK'D BY:
DATE: 10.24.2018

SHEET No:
A-210

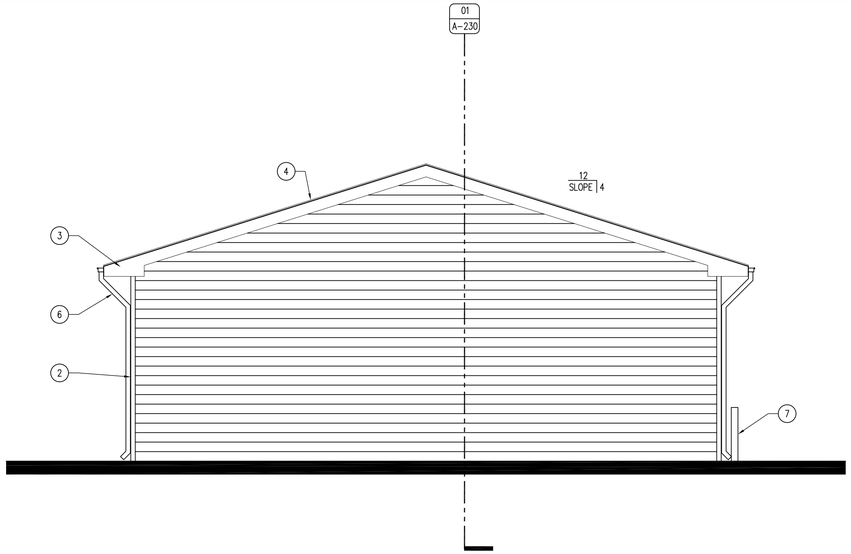

04 EXTERIOR ELEVATION – NORTH
SCALE: 3/16" = 1'-0"

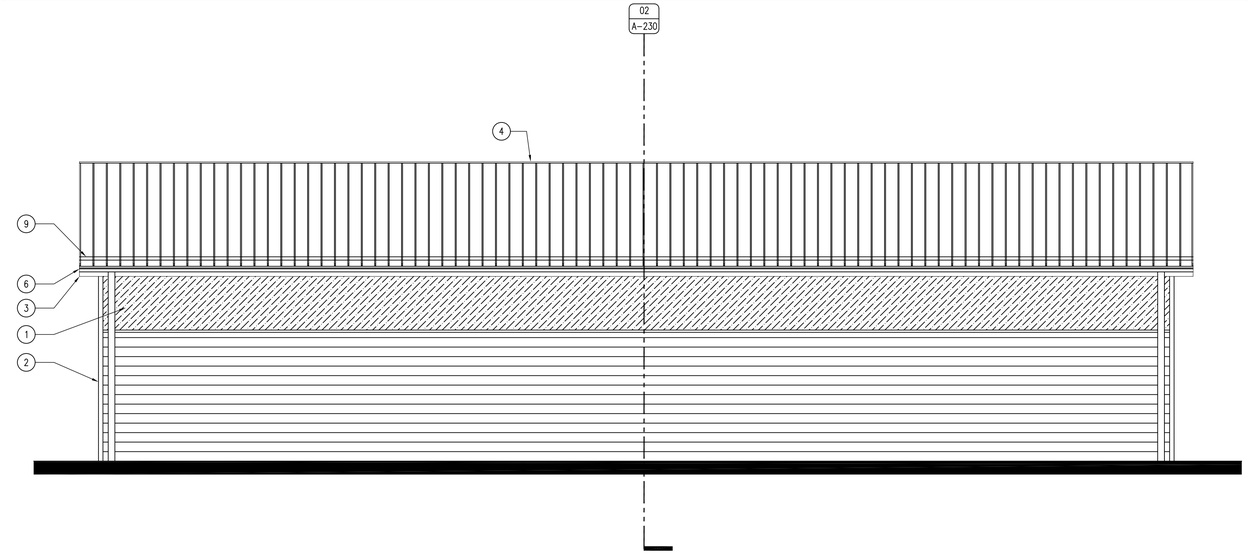

03 EXTERIOR ELEVATION – WEST
SCALE: 3/16" = 1'-0"

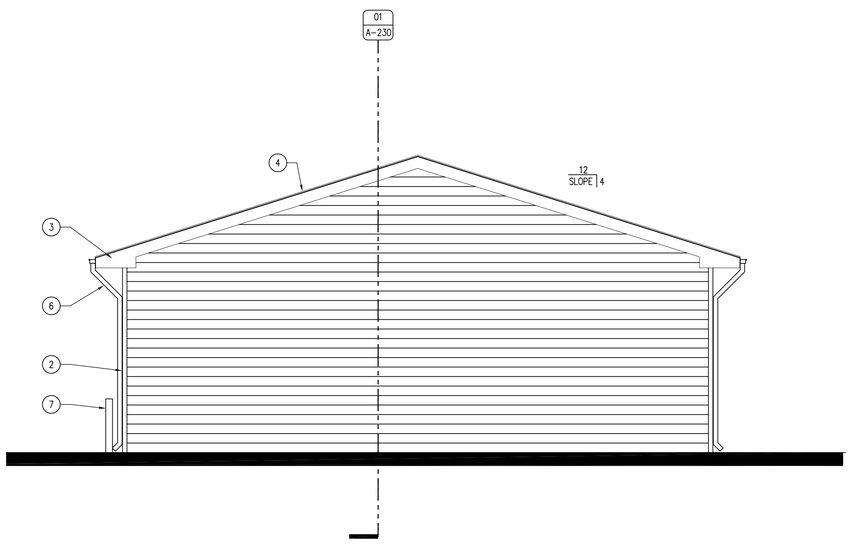

02 EXTERIOR ELEVATION – SOUTH
SCALE: 3/16" = 1'-0"

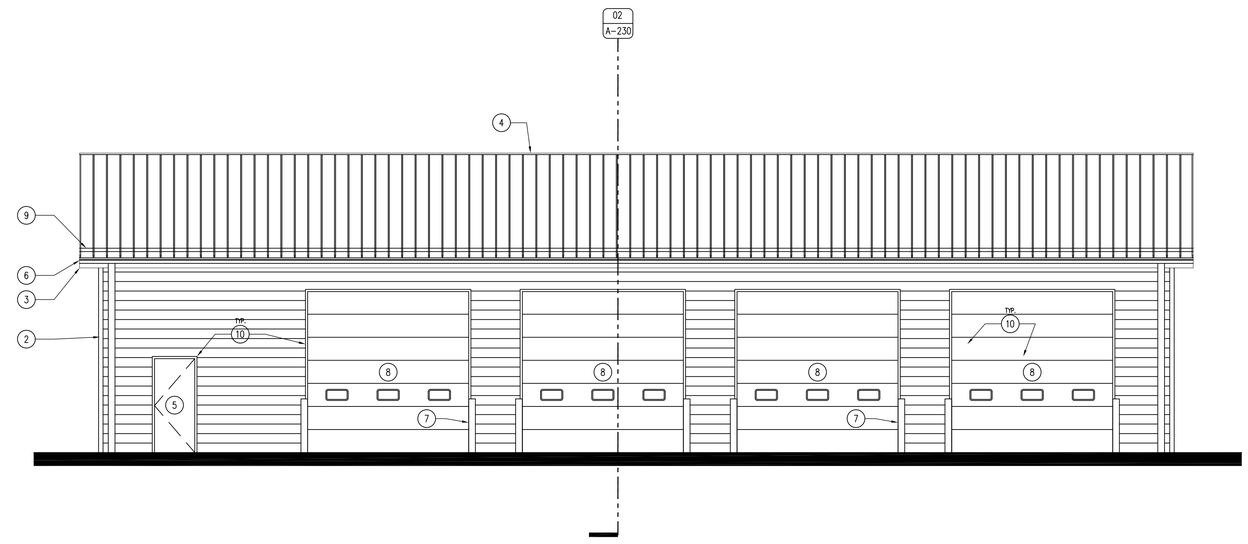

01 EXTERIOR ELEVATION – EAST
SCALE: 3/16" = 1'-0"

KEYNOTES

1. POLYCARBONATE WINDOW LIGHT, 48" TALL X ENTIRE LENGTH OF BUILDING, BY BUILDING MANUFACTURER.
2. POST-FRAME BUILDING WITH 26 GAUGE METAL SIDING, COLOR TBD, REFER TO SHEET A-600.
3. SOFFIT AND FASCIA METAL PANEL, COLOR TO MATCH ROOF.
4. 24 GAUGE METAL ROOF WITH STRIATIONS, REFER TO SHEET A-600.
5. DOOR AS SCHEDULED, REFER TO SHEET A-600.
6. METAL GUTTER AND DOWNSPOUT SYSTEM TO MATCH ROOF, FASCIA AND SOFFIT.
7. STEEL TRAFFIC BOLLARD WITH PLASTIC COVER SLEEVE, REFER TO DETAIL 03/A-010.
8. INSULATED OVERHEAD GARAGE DOOR WITH THREE SAFETY LIGHTS, REFER TO DOOR SCHEDULE SHEET A-600.
9. S-5! COLORGARD METAL SNOW GUARD BARS OF BOTH EAVES, ENTIRE LENGTH OF BUILDING, COLOR TO MATCH ROOF.

GENERAL NOTES

A. REFER TO FINISH & DOOR SCHEDULE, SHEET A-600.
B. REFER TO INDEX SHEET FOR WALL TYPES, A-002.
C. REFER TO MECHANICAL, ELECTRICAL, PLUMBING SHEETS FOR MORE INFORMATION.
D. FIELD VERIFY ALL DIMENSIONS PRIOR TO CONSTRUCTION.
E. THIS BUILDING SHALL BE PRE-ENGINEERED BY BUILDING SUPPLIER.

CONSULTANT:

IOWA DEPARTMENT OF NATURAL RESOURCES
ENGINEERING SERVICES - WALLACE BUILING
502 E. 9TH ST., DES MOINES, IA 50319-0034
P: 515.725.8200
F: 515.725.8202

EXTERIOR ELEVATIONS

NEW OFFICE & STORAGE BUILDING FOR:
VIKING LAKE STATE PARK

2780 VIKING LAKE ROAD
STANTON, IA 51573

NO.	BY / DATE	REVISION

DRAWN BY:
PROJECT NUMBER: 17-04-69-02
CHK'D BY:
DATE: 10.24.2018
SHEET No: **A-220**

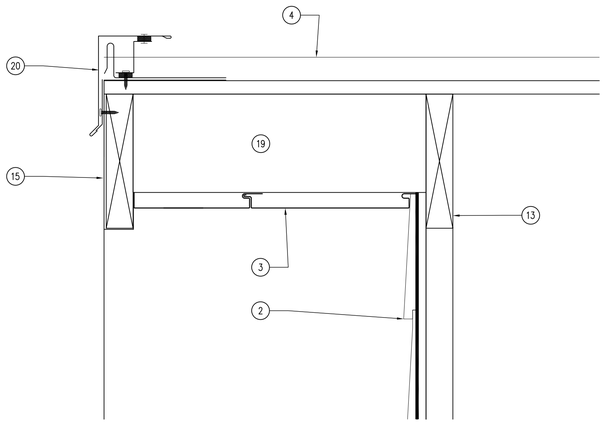

05 DETAIL – ROOF GABLE
SCALE: 3" = 1'-0"

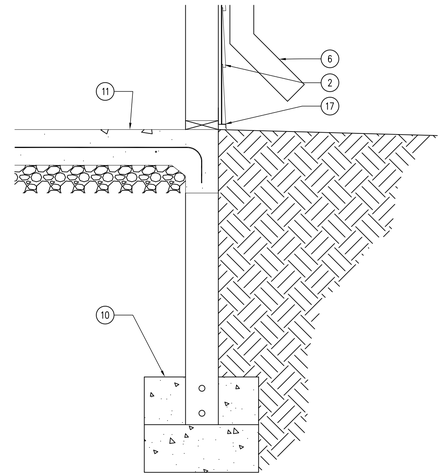

04 DETAIL – POST FRAME BUILDING FOOTING
SCALE: 1" = 1'-0"

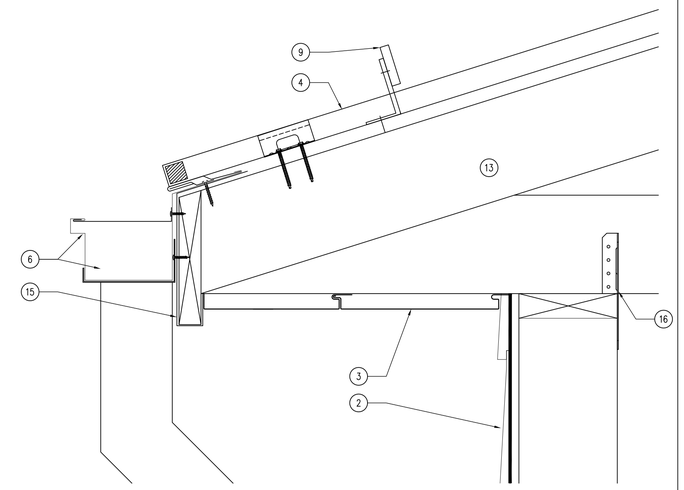

03 DETAIL – ROOF EAVE
SCALE: 3" = 1'-0"

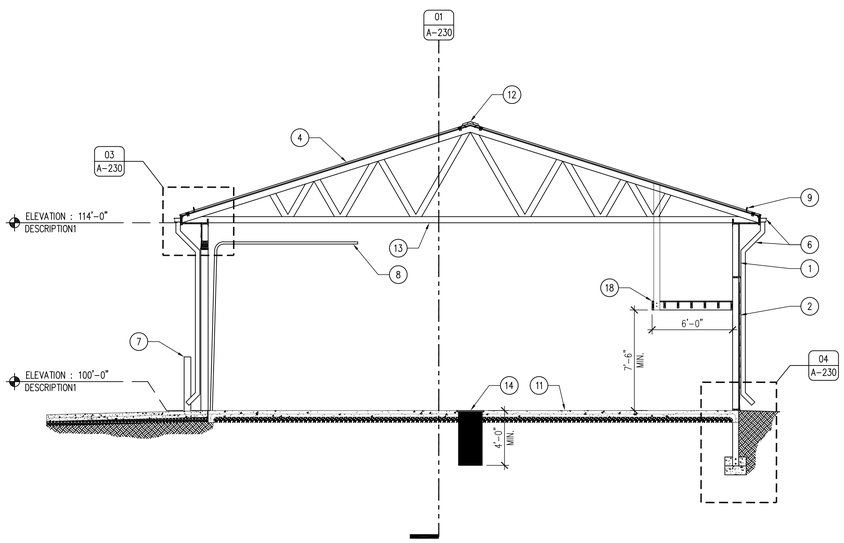

02 BUILDING SECTION
SCALE: 3/16" = 1'-0"

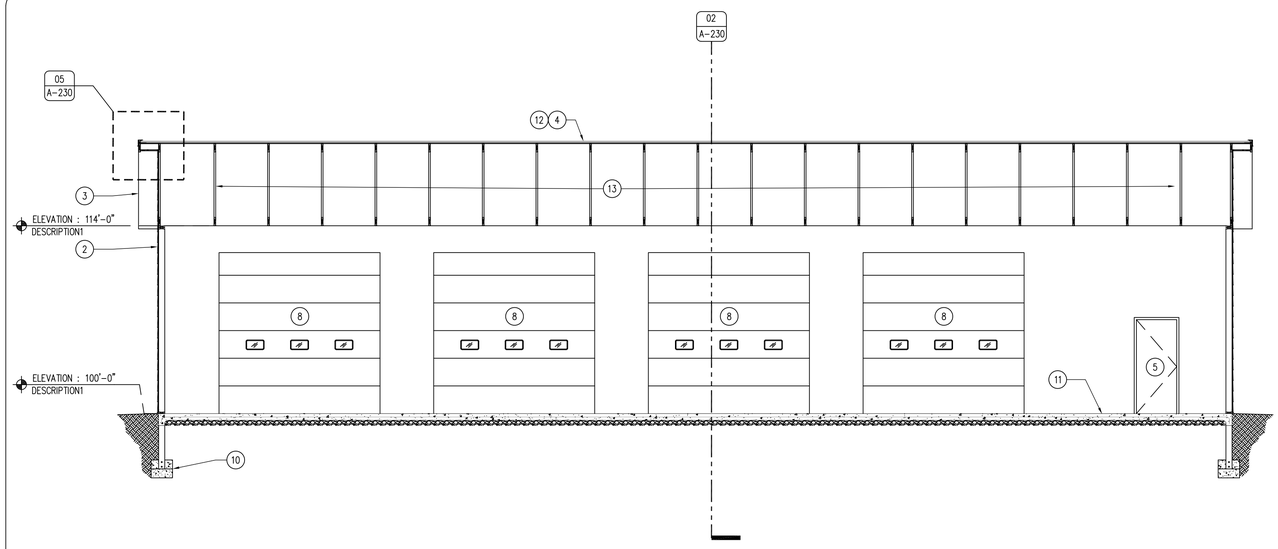

01 BUILDING SECTION
SCALE: 3/16" = 1'-0"

KEYNOTES

1. POLYCARBONATE WINDOW LIGHT, 48" TALL X ENTIRE LENGTH OF BUILDING, BY BUILDING MANUFACTURER.
2. POST-FRAME BUILDING WITH 26 GAUGE STEEL SIDING, COLOR TBD, REFER TO SHEET A-600.
3. SOFFIT AND FASCIA METAL PANEL, COLOR TO MATCH ROOF.
4. 24 GAUGE STEEL ROOF WITH STRIATIONS OVER 2X PURLINS BY BUILDING MANUFACTURER. COLOR TO BE DARK BRONZE, REFER TO SHEET A-600.
5. DOOR AS SCHEDULED, REFER TO SHEET A-600.
6. REAR OF BUILDING TO RECEIVE 48" POLYCARBONATE WINDOW ACROSS ENTIRE LENGTH OF BUILDING.
7. STEEL TRAFFIC BOLLARD WITH PLASTIC COVER SLEEVE, REFER TO DETAIL 03/A-010.
8. INSULATED OVERHEAD GARAGE DOOR WITH THREE SAFETY LIGHTS, REFER SHEET A-600.
9. S-5! COLORGARD SNOW BARS OF BOTH EAVES, ENTIRE LENGTH OF BUILDING, COLOR TO MATCH ROOF.
10. POST-FRAME FOOTING, PER BUILDING MANUFACTURER.
11. 6" CONCRETE BUILDING SLAB OVER VAPOR BARRIER AND 6" SUBBASE, #4 REBAR 24" O.C. BOTH DIRECTIONS, TURN DOWN SLAB PER BUILDING MANUFACTURER'S RECOMMENDATIONS.
12. VENTED ROOF RIDGE BY ROOFING MANUFACTURER.
13. BUILDING TRUSS PER BUILDING MANUFACTURER, SPACING FOR DEMONSTRATION ONLY.
14. 24"X24" SQUARE ROCK DRAIN, FILL WITH CLEAN RIVER ROCK, WRAP WITH FILTER FABRIC. DRAIN GRATE TO BE HEAVY DUTY STEEL GRATE.
15. 2X FASCIA WITH DARK BRONZE METAL FLASHING WRAP.
16. SIMPSON TRUSS CLIP.
17. DRIP-EDGE, COLOR TO MATCH ADJACENT MATERIAL.
18. 6'-0" DEEP X LENGTH OF BUILDING, SUSPENDED LOFT, TO BE ENGINEERED BY BUILDING MANUFACTURER TO HOLD 100 PSF. SAFETY CHAINS PER OSHA REGULATIONS, 18" AND 36" HEIGHT.
19. 2X OUTRIGGER, EXTEND 18" FOR OVERHANG, PER BUILDING MANUFACTURER.
20. ROOF RAKE TRIM, PER ROOF MANUFACTURER.

GENERAL NOTES

A. REFER TO FINISH & DOOR SCHEDULE, SHEET A-600.
B. REFER TO INDEX SHEET FOR WALL TYPES, A-002.
C. REFER TO MECHANICAL, ELECTRICAL, PLUMBING SHEETS FOR MORE INFORMATION.
D. FIELD VERIFY ALL DIMENSIONS PRIOR TO CONSTRUCTION.
E. THIS BUILDING SHALL BE PRE-ENGINEERED BY BUILDING SUPPLIER.

CONSULTANT:

IOWA DEPARTMENT OF NATURAL RESOURCES
ENGINEERING SERVICES - WALLACE BUILING
502 E. 9TH ST., DES MOINES, IA 50319-0034
P: 515.725.8200
F: 515.725.8202

BUILDING SECTIONS

NEW OFFICE & STORAGE BUILDING FOR:
VIKING LAKE STATE PARK

2780 VIKING LAKE ROAD
STANTON, IA 51573

NO.	BY / DATE	REVISION

DRAWN BY:
PROJECT NUMBER: 17-04-69-02
CHK'D BY:
DATE: 10.24.2018
SHEET No: **A-230**

DOOR TYPES

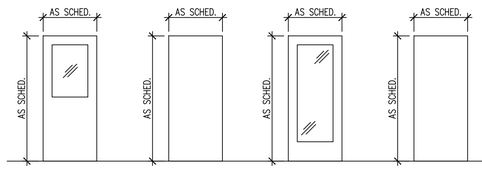

D-1 STEELCRAFT L18 EXTERIOR DOOR POLYURETHANE FILLED

D-2 SOLID WOOD DOOR PREMIUM "A" GRADE MAPLE VENEER

D-3 STEELCRAFT L18 EXTERIOR DOOR POLYURETHANE FILLED

D-4 STEELCRAFT L18 EXTERIOR DOOR HONEYCOMB CENTER

FRAME TYPES

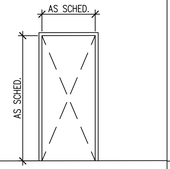

F-1 STEELCRAFT "F" SERIES EXTERIOR FRAME HOLLOW METAL

WINDOW TYPES

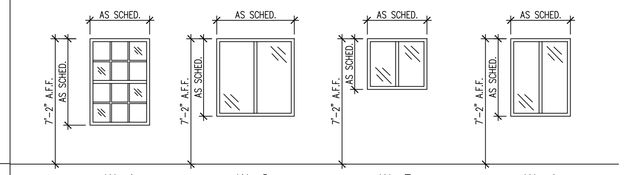

W-1 DOUBLE-HUNG WINDOW COLONIAL GRILLE ANDERSEN 100

W-2 SLIDER WINDOW ANDERSEN 100 DARK BRONZE

W-3 SLIDER WINDOW ANDERSEN 100 DARK BRONZE

W-4 SLIDER WINDOW ANDERSEN 100 DARK BRONZE

FINISH SCHEDULE

ROOM #	ROOM NAME	FLOORING	BASE	NORTH WALL FINISH	EAST WALL FINISH	SOUTH WALL FINISH	WEST WALL FINISH	CEILING	NOTES
100	VESTIBULE	CONC-1	WB-1	PNT-1	PNT-1	PNT-1	PNT-2	GYP-1	–
101	OPEN OFFICE	CONC-1	WB-1	PNT-1	PNT-1	PNT-1	PNT-2	ACT-1	–
102	CORRIDOR	CONC-1	WB-1	PNT-1	PNT-1	PNT-1	PNT-2	ACT-1	–
104	RESTROOM	CONC-1	RB-1	PNT-1	PNT-1	PNT-1	PNT-2	GYP-1	–
105	MECHANICAL	CONC-1	RB-1	PNT-1	PNT-1	PNT-1	PNT-1	OPEN	–
106	MEETING ROOM	CONC-1	WB-1	PNT-1	PNT-1	PNT-1	PNT-2	ACT-1	–
107	HEATED BAYS	CONC-1	–	ST-1	ST-1	ST-1	ST-1	ST-1	29 GAUGE STEEL LINER PANEL WALLS & CEILING
200	STORAGE	CONC-1	–	–	–	–	–	OPEN	–

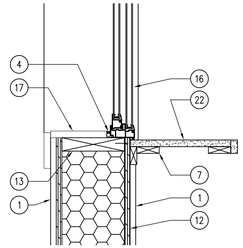

12 TRANSACTION WINDOW
SCALE: 1 1/2" = 1'-0"

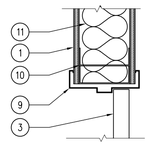

11 DOOR DETAIL - JAMB
SCALE: 1 1/2" = 1'-0"

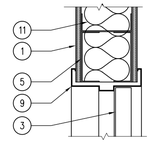

10 DOOR DETAIL - HEADER
SCALE: 1 1/2" = 1'-0"

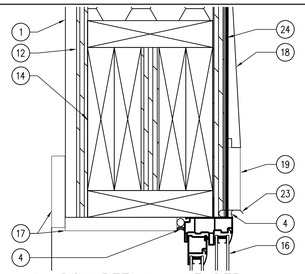

09 WINDOW DETAIL - HEADER
SCALE: 3" = 1'-0"

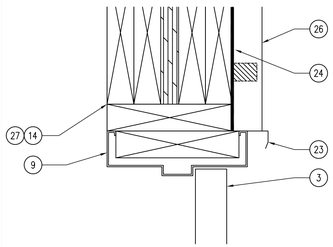

08 DOOR DETAIL - HEADER
SCALE: 3" = 1'-0"

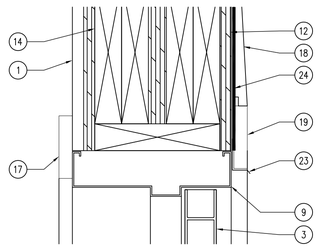

07 DOOR DETAIL - HEADER
SCALE: 3" = 1'-0"

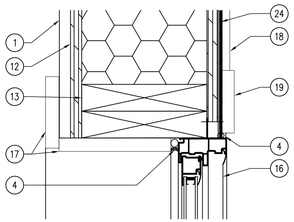

06 WINDOW DETAIL - JAMB
SCALE: 3" = 1'-0"

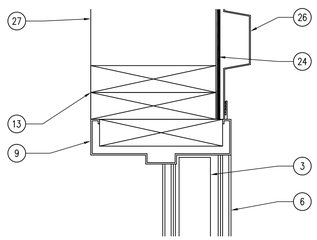

05 DOOR DETAIL - JAMB
SCALE: 3" = 1'-0"

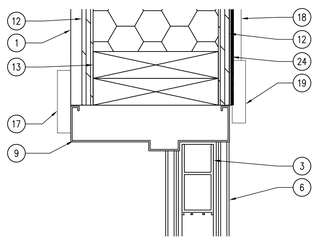

04 DOOR DETAIL - JAMB
SCALE: 3" = 1'-0"

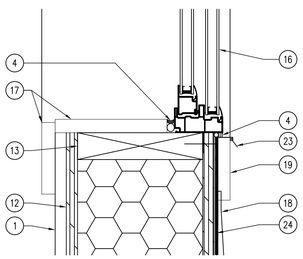

03 WINDOW DETAIL - SILL
SCALE: 3" = 1'-0"

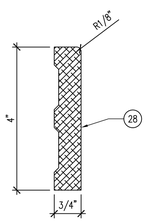

02 WALL BASE PROFILE
SCALE: 6" = 1'-0"

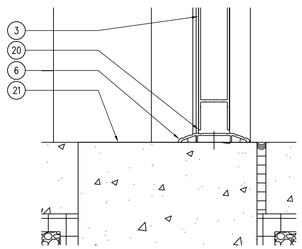

01 DOOR DETAIL - THRESHOLD
SCALE: 3" = 1'-0"

FINISH SCHEDULE

A. WOOD DOORS TO BE CUSTOM GRADE "A" MAPLE WOOD VENEER SOLID CORE. FINISH TO BE APPROVED.
B. ALL HARDWARE MODEL NUMBERS BASED ON SCHLAGE "ND-SERIES" LOCKSETS AND "IVES" HARDWARE.
C. HARDWARE FINISH TO BE : "AGED BRONZE (643e)", UNLESS NOTED OTHERWISE.
D. WINDOW BASIS OF DESIGN, ANDERSEN 100 SERIES. REFER TO MANUFACTURER'S INSTRUCTIONS.
E. CHECK ALL QUANTITIES, DIMENSIONS AND FINISHES BEFORE ORDERING.
F. ALL STEEL WALK-THROUGH DOORS TO BE GALVANIZED. PAINT ALL STEEL DOORS AND FRAMES DARK BRONZE.
G. ALL STEEL WALK-THROUGH DOORS TO RECEIVE DRIP-CAPS BY MANUFACTURER.
H. ALL GARAGE DOORS TO BE OVERHEAD DOOR COMPANY WITH ELECTRIC HOIST. REFER TO DOOR SCHEDULE FOR TYPE. ALL DOORS TO HAVE SAFETY LIGHTS.

HARDWARE SET NO. 1 – DOORS: 100A
3 EA. NRP HINGES FBB191 4 1/2 X 4 1/2
1 EA. STORE LOCKSET ND60PD (ATHENS)
3 EA. PERIMETER SEALS BLACK GASKET
1 EA. THRESHOLD SEAL BLACK BROOM TYPE
1 EA. ADA THRESHOLD PLATE
1 EA. CLOSER LCN 4111

HARDWARE SET NO. 2 – DOORS: 104
3 EA. HINGES FBB179 4 1/2 X 4 1/2
1 EA. PRIVACY LOCKSET ND40S (ATHENS)
1 EA. FLOOR STOP FS444
3 EA. SILENCERS SR66 (BLACK)

HARDWARE SET NO. 3 – DOORS: 105A, 105B
3 EA. HINGES FBB179 4 1/2 X 4 1/2
1 EA. STOREROOM LOCKSET ND80PD (ATHENS)
1 EA. FLOOR STOP FS444
3 EA. SILENCERS SR66 (BLACK)

HARDWARE SET NO. 4 – DOORS: 102A, 102B
3 EA. HINGES FBB179 4 1/2 X 4 1/2
1 EA. PASSAGE ND10 (ATHENS)
1 EA. FLOOR STOP FS 444
3 EA. SILENCERS SR66 (BLACK)

HARDWARE SET NO. 5 – DOORS: 100B, 101, 106, 107A, 200A
3 EA. NRP HINGES FBB191 4 1/2 X 4 1/2
1 EA. ENTRANCE LOCKSET ND50PD (ATHENS)
3 EA. PERIMETER SEALS BLACK GASKET
1 EA. THRESHOLD SEAL BLACK BROOM TYPE
1 EA. ADA THRESHOLD PLATE
1 EA. CLOSER LCN 4111

FINISH SCHEDULE

FINISH MARK	MATERIAL	MANUFACTURER INFO: COMPANY NAME	MANUFACTURER INFO: PRODUCT NUMBER	DIMENSION	COLOR	FINISH	COMMENTS
FLOOR FINISH							
CONC-1	PENETRATING SEALER	–	–	–	CLEAR	MATTE	SILANE, SILOXANE OR SILICONATE
RB-1	RUBBER BASE	JOHNSONITE	–	4"	TBD	–	GARAGE, MECH. & BATHROOM AREAS
WB-1	HARD MAPLE BASE	–	–	4"	CLEAR	POLY	–
CEILING FINISH							
ACT-1	ACOUSTICAL CLG TILE	ARMSTRONG	1911 TEGULAR	24"X 24"	WHITE	ULTIMA	PRELUDE XL 15/16" SUSP. SYSTEM
GYP-1	GYPSUM CEILING	–	TYPE X	5/8"	WHITE	PNT-1	–
ST-1	STEEL LINER PANEL	–	–	29 GAUGE	WHITE	MANUF.	STORM PANEL
INTERIOR FINISH							
PNT-1	INTERIOR PAINT	SHERWIN WILLIAMS	DURATION	–	SW6106 – KILIM BEIGE	PEARL	COMMON
PNT-2	INTERIOR PAINT	SHERWIN WILLIAMS	DURATION	–	SW6108 – LATTE	PEARL	ACCENT
GYP-2	GYPSUM WALL BOARD	–	–	1/2"	–	ORANGE PEEL	PAINT PER ROOM SCHEDULE
ST-1	STEEL LINER PANEL	–	–	29 GAUGE	WHITE	MANUF.	HEATED BAYS
MILLWORK / WOOD FINISH							
WD-1	MAPLE VENEER PLYWOOD	–	–	–	NATURAL	SATIN POLY	ALL WOOD/MILLWORK – SUBMIT SAMPLES
WD-2	3/4" SOLID HARD MAPLE	–	–	3/4" X 4"	NATURAL	SATIN POLY	ALL WOOD/MILLWORK – SUBMIT SAMPLES
SS-1	CORIAN	DUPONT	–	–	LAVA ROCK	MANUF.	ALL WOOD/MILLWORK – SUBMIT SAMPLES
PL-1	PLASTIC LAMINATE	–	–	–	BLACK	MANUF.	ALL WOOD/MILLWORK – SUBMIT SAMPLES
EXTERIOR FINISH							
SR-1	STANDING SEAM METAL ROOF	MCELROY	MEDALLION-LOK	24 GA	DARK BRONZE	KYNAR 500	–
CB-1	COMPOSITE BOARD SIDING	LP CORPORATION	76 SERIES CEDAR LAP	11.84"	DIAMOND KOTE COLOR	MANUF.	SUBMIT COLOR SAMPLES
CB-2	COMPOSITE BOARD TRIM	LP CORPORATION	540 SERIES CEDAR TRIM	5.5"	DARK BRONZE	–	COLOR MATCH ROOF STEEL
SW-1	EXTERIOR STEEL WALL PANEL	MCELROY	MAX-RIB ULTRA	26 GA	TBD	KYNAR 500	SUBMIT COLOR SAMPLES

KEYNOTES

1. GYPSUM BOARD.
2. 6" STRUCTURAL METAL STUD.
3. DOOR AS SCHEDULED.
4. CONTINOUS SEALANT AND BACKER ROD
5. MTL. BOX STUD HEADER
6. ADA COMPLIANT, THRESHOLD.
7. WOOD BLOCKING AS REQUIRED.
8. R-15 MINIMUM BATT INSULATION.
9. DOOR FRAME AS SCHEDULED.
10. 3 5/8" METAL. STUD.
11. SOUND BATT INSULATION.
12. SIP WALL SYSTEM AS SCHEDULED.
13. 2X, PER MANUF. RECOMMENDATION.
14. SIP HEADER, PER MANUF. RECOMMENDATION.
15. BOX STUD HEADER.
16. WINDOW AS SCHEDULED.
17. HARD MAPLE TRIM / SILL, WD-1.
18. COMPOSITE BOARD SIDING, AS SCHEDULED.
19. COMPOSITE BOARD TRIM, AS SCHEDULED.
20. BRUSH TYPE GASKET FOR EXTERIOR DOORS.
21. CONCRETE SLAB.
22. QUARTZ COUNTER TOP, QZ-1, ANGLE BRACE AS REQUIRED.
23. METAL FLASHING W/ SEALANT, AS REQUIRED.
24. CONTINUOUS VAPOR BARRIER.
25. WATER RESISTANT PLYWOOD SHEATHING.
26. STEEL SIDING AS SCHEDULED.
27. POST-FRAME BUILDING BY MANUFACTURER.
28. SOLID MAPLE WALL BASE, 2X COATS POLY.

DOOR SCHEDULE

DOOR NUMBER	DOOR: DIMENSION WIDTH	DOOR: DIMENSION HEIGHT	DOOR: DIMENSION THICK.	DOOR: TYPE	DOOR: GLASS	DOOR: FINISH	FRAME: DETAILS HEAD	FRAME: DETAILS JAMB	FRAME: DETAILS THRESHOLD	FRAME: TYPE	FRAME: FINISH	FIRE RATING LABEL	HARDWARE SET #	HARDWARE KEYSIDE ROOM NUMBER	COMMENTS
100A	3'-0"	7'-0"	1 3/4"	D-3	MANUF.	DARK BRONZE	07/A-600	04/A-600	01/A-600	F-1	DARK BRONZE		1	EXT.	EXT. STEELCRAFT "L" SERIES – FULL LIGHT
100B	3'-0"	7'-0"	1 3/4"	D-2	MANUF.	CLEAR	07/A-600	04/A-600	01/A-600	F-1	DARK BRONZE		5	100	PREMIUM GRADE "A" MAPLE
101	3'-0"	7'-0"	1 3/4"	D-2	MANUF.	CLEAR	10/A-600	11/A-600	–	F-1	DARK BRONZE		5	102	PREMIUM GRADE "A" MAPLE
102A	3'-0"	7'-0"	1 3/4"	D-2	MANUF.	CLEAR	10/A-600	11/A-600	–	F-1	DARK BRONZE		4	NA	PREMIUM GRADE "A" MAPLE
102B	3'-0"	7'-0"	1 3/4"	D-1	MANUF.	DARK BRONZE	07/A-600	04/A-600	01/A-600	F-1	DARK BRONZE		4	NA	EXT. STEELCRAFT "L" SERIES – HALF LIGHT
104	3'-0"	7'-0"	1 3/4"	D-2	MANUF.	CLEAR	10/A-600	11/A-600	–	F-1	DARK BRONZE		2	102	PREMIUM GRADE "A" MAPLE
105A	3'-0"	7'-0"	1 3/4"	D-2	MANUF.	CLEAR	–	–	–	F-1	DARK BRONZE		3	106	PREMIUM GRADE "A" MAPLE
105B	3'-0"	7'-0"	1 3/4"	D-2	MANUF.	CLEAR	–	–	–	F-1	DARK BRONZE		3	106	PREMIUM GRADE "A" MAPLE
106	3'-0"	7'-0"	1 3/4"	D-1	MANUF.	DARK BRONZE	07/A-600	04/A-600	01/A-600	F-1	DARK BRONZE		4	EXT.	EXT. STEELCRAFT "L" SERIES – HALF LIGHT
107A	3'-0"	7'-0"	1 3/4"	D-1	MANUF.	DARK BRONZE	07/A-600	04/A-600	01/A-600	F-1	DARK BRONZE		5	EXT.	EXT. STEELCRAFT "L" SERIES – HALF LIGHT
107B	12'-0"	12'-0"	–	–	MANUF.	MANUF.	–	–	–	–	–		–	–	THERMACORE 592 W/ SAFETY WINDOWS
107C	12'-0"	12'-0"	–	–	MANUF.	MANUF.	–	–	–	–	–		–	–	THERMACORE 592 W/ SAFETY WINDOWS
200A	3'-0"	7'-0"	1 3/4"	D-4	MANUF.	DARK BRONZE	08/A-600	05/A-600	SIM. – 01/A-600	F-1	DARK BRONZE		5	EXT.	EXT. STEELCRAFT "L" SERIES – FLUSH DOOR
200B	12'-0"	12'-0"	–	–	MANUF.	MANUF.	–	–	–	–	–		–	–	MODEL 430 W/ SAFETY WINDOWS
200C	12'-0"	12'-0"	–	–	MANUF.	MANUF.	–	–	–	–	–		–	–	MODEL 430 W/ SAFETY WINDOWS
200D	12'-0"	12'-0"	–	–	MANUF.	MANUF.	–	–	–	–	–		–	–	MODEL 430 W/ SAFETY WINDOWS
200E	12'-0"	12'-0"	–	–	MANUF.	MANUF.	–	–	–	–	–		–	–	MODEL 430 W/ SAFETY WINDOWS

WINDOW SCHEDULE

WINDOW TYPE	WINDOW: DIMENSION WIDTH	WINDOW: DIMENSION HEIGHT	WINDOW: TYPE	WINDOW: GLASS	WINDOW: FINISH	FRAME: DETAILS HEAD	FRAME: DETAILS JAMB	FRAME: DETAILS SILL	FRAME: TYPE	FRAME: FINISH	QUANTITY	COMMENTS
W-1	36"	54"	1	MANUF.	MANUF.	09/A-600	06/A-600	03/A-600	–	DARK BRONZE	2	ANDERSEN 100 – DOUBLE HUNG WITH COLONIAL GRILLE
W-2	48"	48"	1	MANUF.	MANUF.	09/A-600	06/A-600	12/A-600	–	DARK BRONZE	1	ANDERSEN 100 – SLIDER WINDOWS
W-3	36"	30"	1	MANUF.	MANUF.	09/A-600	06/A-600	03/A-600	–	DARK BRONZE	3	ANDERSEN 100 – SLIDER WINDOWS
W-4	36"	48"	1	MANUF.	MANUF.	09/A-600	06/A-600	03/A-600	–	DARK BRONZE	6	ANDERSEN 100 – SLIDER WINDOWS

CONSULTANT:

IOWA DEPARTMENT OF NATURAL RESOURCES
ENGINEERING SERVICES - WALLACE BUILING
502 E. 9TH ST., DES MOINES, IA 50319-0034
P: 515.725.8200
F: 515.725.8202

FINISH, DOOR & WINDOW SCHEDULES

NEW OFFICE & STORAGE BUILDING FOR:
VIKING LAKE STATE PARK

2780 VIKING LAKE ROAD
STANTON, IA 51573

NO.	BY / DATE	REVISION

DRAWN BY:
PROJECT NUMBER: 17-04-69-02
CHK'D BY:
DATE: 10.24.2018
SHEET NO: A-600

MECHANICAL SYMBOLS

CW	COLD WATER
HW	HOT WATER SUPPLY
RHW	RECIRCULATING HOT WATER
SS	SOIL, WASTE, OR SANITARY SEWER BELOW FLOOR OR GRADE
D	DRAIN
CD	CONDENSATE DRAIN ABOVE FLOOR OR GRADE
V	VENT ABOVE FLOOR OR GRADE
REF	REFRIGERANT LINE
HWS	LOW TEMPERATURE HOT WATER SUPPLY
HWR	LOW TEMPERATURE HOT WATER RETURN
3"FD-1	FLOOR DRAIN – TYPE AND SIZE AS NOTED
HB-1	HOSE BIBB – TYPE AS NOTED
	LOCATION OF THERMOSTAT/ROOM TEMPERATURE SENSOR +48" OR AS NOTED
	EXHAUST DUCT UP
	EXHAUST DUCT DOWN
	RECTANGULAR TO ROUND DUCT TRANSITION
	90 DEGREE MITERED ELBOW
	90 DEGREE MITERED ELBOW WITH TURNING VANES
	90 DEGREE RADIUS ELBOW
	90 DEGREE RADIUS ELBOW WITH TURNING VANES
SSI 1	EQUIPMENT TAG
	NEW DUCTWORK

NOTE: NOT ALL SYMBOLS APPLY TO THIS PROJECT.

	UNION
MV	AIR VENT – MANUAL
AV	AIR VENT – AUTOMATIC
	THERMOMETER WITH GAGE COCK
	PRESSURE GAUGE WITH GAGE COCK
	STRAINER
	REDUCED PRESSURE BACKFLOW PREVENTER
"A"	WATER HAMMER ARRESTOR – SIZE AS NOTED
	CHECK VALVE
	RISER DOWN (ELBOW)
	RISER DOWN (TEE)
	RISER UP (ELBOW)
	NEW PIPING
	SHUT OFF VALVE (BALL, BUTTERFLY, ETC. REFER TO SPECS)

NOTE: NOT ALL SYMBOLS APPLY TO THIS PROJECT.

MECHANICAL ABBREVIATIONS

ABSOR	ABSORPTION
ACU	AIR CONDITIONING UNIT
AD	ACCESS DOOR OR AREA DRAIN
AFF	ABOVE FINISHED FLOOR
AFG	ABOVE FINISHED GRADE
AHU	AIR HANDLING UNIT
AV	AIR VENT
BOT	BOTTOM
BTU	BRITISH THERMAL UNIT
BTUH	BTU PER HOUR
CA	COMPRESSED AIR
CB	CATCH BASIN
CENT	CENTRIFUGAL
CFM	CUBIC FEET PER MINUTE
CI	CAST IRON
CL	CENTER LINE
COND	CONDENSATE
CO	CLEAN OUT
CONC	CONCRETE
CONTR	CONTRACTOR
CP	CONDENSATE PUMP
CU	COPPER
CUH	CABINET UNIT HEATER
CWP	CIRCULATING WATER PUMP
DDC	DIRECT DIGITAL CONTROLS
DN	DOWN
DR	DRAIN
DS	DOWNSPOUT
EA	EXHAUST AIR
EAT	ENTERING AIR TEMPERATURE
EC	ELECTRICAL CONTRACTOR
EDBT	ENTERING DRY BULB TEMPERATURE
EF	EXHAUST FAN
EJ	EXPANSION JOINT
EQUIP	EQUIPMENT
EST	EXTERNAL STATIC PRESSURE
EWBT	ENTERING WET BULB TEMPERATURE
EWC	ELECTRIC WATER COOLER
EWT	ENTERING WATER TEMPERATURE
EX	EXISTING
EXH	EXHAUST
EXP	EXPANSION
FAI	FRESH AIR INTAKE
FCU	FAN COIL UNIT
FD	FLOOR DRAIN
FLEX	FLEXIBLE
FLR	FLOOR
FPM	FEET PER MINUTE
FPS	FEET PER SECOND
FS	FLOOR SINK
FT	FINTUBE
FTG	FOOTING
GA	GAGE
GAL	GALLON
GALV	GALVANIZED
GC	GENERAL CONTRACTOR
GPH	GALLONS PER HOUR
GPM	GALLONS PER MINUTE
H	WALL HYDRANT
HR	HOUR
HTG	HEATING
HB	HOSE BIBB
ISP	INTERNAL STATIC PRESSURE
JR	JANITOR RECEPTOR
LAV	LAVATORY
LDBT	LEAVING DRY BULB TEMPERATURE
LWT	LEAVING WATER TEMPERATURE
LWBT	LEAVING WET BULB TEMPERATURE
MB	MOP BASIN
MBH	1000 BTUH
MC	MECHANICAL CONTRACTOR
MECH	MECHANICAL
MH	MANHOLE
NTS	NOT TO SCALE
OA	OUTSIDE AIR
OD	OVERFLOW ROOF DRAIN
PSI	POUNDS PER SQUARE INCH
PRV	POWER ROOF VENTILATOR
PRV	PRESSURE REDUCING VALVE
PV	PRESSURE VENT
PVC	POLYVINYL CHLORIDE
RA	RETURN AIR
RD	ROOF DRAIN
RH	RELATIVE HUMIDITY
RTU	ROOF TOP UNIT
RV	RELIEF VALVE
SK	SINK
SA	SUPPLY AIR
SH	SHOWER
SP	STATIC PRESSURE
TCC	TEMPERATURE CONTROL CONTRACTOR
TYP	TYPICAL
UC	UNDER CUT DOOR (3/4")
UH	UNIT HEATER
UR	URINAL
UV	UNIT VENTILATOR
VTR	VENT THROUGH ROOF
WC	WATER CLOSET
WH	WATER HEATER

NOTE: NOT ALL ABBREVIATIONS APPLY TO THIS PROJECT.

MECHANICAL GENERAL NOTES

COORDINATE LOCATION/INSTALLATION OF MECHANICAL AND ELECTRICAL WORK WITH ALL OTHER TRADES. NO ASPECT OF A SYSTEM INSTALLATION OR ITS ROUGH-IN SHALL COMMENCE UNTIL PROPER AND TIMELY COORDINATION WITH ALL TRADES ASSOCIATED WITH THE INSTALLATION HAS TRANSPIRED. ITEMS TO BE COORDINATED SHALL INCLUDE BUT NOT BE LIMITED TO: BUILDING STRUCTURE, SHEET METAL, ALL PIPING SYSTEMS, LIGHT FIXTURES, CONDUITS, ETC. REFER TO ALL GENERAL, MECHANICAL, AND ELECTRICAL DRAWINGS AND SPECIFICATIONS FOR THIS PROJECT.

INCORPORATE INTO INSTALLATION MECHANICAL SPECIFICATIONS, DRAWINGS, STATE AND LOCAL CODES, AND OTHER APPLICABLE REQUIREMENTS.

ON COMPLETION OF THE INSTALLATION, MECHANICAL CONTRACTOR SHALL COOPERATE WITH THE OWNER TO PROVIDE ANY NECESSARY ADJUSTING AND BALANCING TO OBTAIN PROPER OPERATION OF ALL EQUIPMENT AND SYSTEMS. CONTRACTOR SHALL PROVIDE ALL FACILITIES AND EQUIPMENT, AND MAKE ALL TESTS, REQUIRED FOR ADJUSTMENTS AND BALANCING TO ESTABLISH THE PROPER PERFORMANCE OF ANY PIECE OF EQUIPMENT.

PIPING SHALL NOT BLOCK CLEARANCES TO MECHANICAL EQUIPMENT. INSTALLING CONTRACTOR SHALL BE RESPONSIBLE FOR RELOCATING PIPING IF ACCESS CLEARANCES ARE OBSTRUCTED.

HVAC GENERAL NOTES

MECHANICAL CONTRACTOR TO PROVIDE A COMPLETE HVAC SYSTEM, INCLUDING DUCTWORK, MECHANICAL EQUIPMENT, SUPPORTS, HANGERS AND ALL APPURTENANCES. INSTALL ALL EQUIPMENT PER MANUFACTURER'S RECOMMENDATIONS. INSTALL SYSTEM TO MEET ALL CITY AND STATE CODES AND REQUIREMENTS.

DRAWING PLANS, SCHEMATICS, AND DIAGRAMS INDICATE GENERAL LOCATION AND ARRANGEMENT OF DUCT SYSTEM. INDICATED DUCT LOCATIONS, CONFIGURATIONS, AND ARRANGEMENTS WERE USED TO SIZE DUCTS AND CALCULATE FRICTION LOSS FOR AIR-HANDLING EQUIPMENT SIZING AND FOR OTHER DESIGN CONSIDERATIONS.

ALL DUCT DIMENSIONS LISTED ARE INTERIOR FREE AREA DUCT DIMENSIONS AND DO NOT INCLUDE INSULATION REQUIREMENTS. CONTRACTOR MUST INCREASE DUCT SIZES ACCORDINGLY TO ACCOMMODATE DUCT LINER.

PLUMBING GENERAL NOTES

MECHANICAL CONTRACTOR TO PROVIDE A COMPLETE PLUMBING SYSTEM, INCLUDING, PIPE, INSULATION, HANGERS, SUPPORTS, EQUIPMENT, FIXTURES, MIXING VALVES, VALVES, AND ALL APPURTENANCES. INSTALL ALL EQUIPMENT PER MANUFACTURER'S RECOMMENDATIONS. SIZE AND INSTALL SYSTEM PER PLUMBING CODE. COMPLY WITH ALL LOCAL AND STATE CODES AND REQUIREMENTS.

DRAWING PLANS, SCHEMATICS, AND DIAGRAMS INDICATE GENERAL LOCATION AND ARRANGEMENT OF PLUMBING SYSTEM.

MECHANICAL WARRANTY NOTES

MECHANICAL CONTRACTOR SHALL WARRANT ALL EQUIPMENT AND INSTALLATION FOR A MINIMUM OF 1 YEAR FROM THE DATE OF SUBSTANTIAL COMPLETION. AIR CONDITIONING REFRIGERATION SYSTEMS SHALL BE WARRANTED FOR A MINIMUM OF 5 YEARS (PARTS ONLY), NON-PRORATED, FROM THE DATE OF SUBSTANTIAL COMPLETION. THE WARRANTY SHALL APPLY TO COMPRESSORS, EVAPORATORS, AND CONDENSER COILS, HIGH AND LOW SIDE PIPING AND PIPING SPECIALTIES WHICH SHALL INCLUDE EXPANSION AND SOLENOID VALVES, RELIEF VALVES, FILTER-DRYER, AND SIGHT GLASSES. PRESSURE GAUGES AND PRESSURE SWITCHES ARE NOT UNDER THE EXTENDED WARRANTY EXCEPT FOR LOSS OF REFRIGERANT AND CONSEQUENTIAL DAMAGE TO THE SYSTEM WHICH WILL BE AN EXTENDED WARRANTY OBLIGATION. ALL DEFECTS THAT BECOME APPARENT WITHIN THE WARRANTY PERIOD SHALL BE REPAIRED BY THE MECHANICAL CONTRACTOR AS DIRECTED BY THE ENGINEER THROUGH THE OWNERS REPRESENTATIVE. WARRANTY WILL NOT OBLIGATE THE MECHANICAL CONTRACTOR TO REPAIR DAMAGE RESULTING FROM ACCIDENT OR IMPROPER OPERATION OF CARE ON THE PART OF THE OWNER AND NOT DUE TO DEFECTIVE MATERIAL. REFER TO SPECIFICATIONS FOR ADDITIONAL DETAILS AND OTHER WARRANTY INFORMATION.

CONSULTANT:
KCL ENGINEERING
300 4th St
West Des Moines, IA 50265
515.724.7938
info@kclengineering.com

IOWA DEPARTMENT OF NATURAL RESOURCES
ENGINEERING SERVICES - WALLACE BUILING
502 E. 9TH ST., DES MOINES, IA 50319-0034
P: 515.725.8200
F: 515.725.8202

MECHANICAL SYMBOLS AND NOTES

NEW OFFICE & STORAGE BUILDING FOR:
VIKING LAKE STATE PARK

2780 VIKING LAKE ROAD
STANTON, IA 51573

NO:	BY / DATE	REVISION

DRAWN BY: CB
PROJECT NUMBER: 17-04-69-02
CHK'D BY: JC
DATE: 10.24.2018
SHEET No: M0.0

GENERAL NOTES

1. REFER TO M0.0 FOR GENERAL NOTES.
2. REFER TO 1/M2.0 FOR DUCTWORK DETAIL.

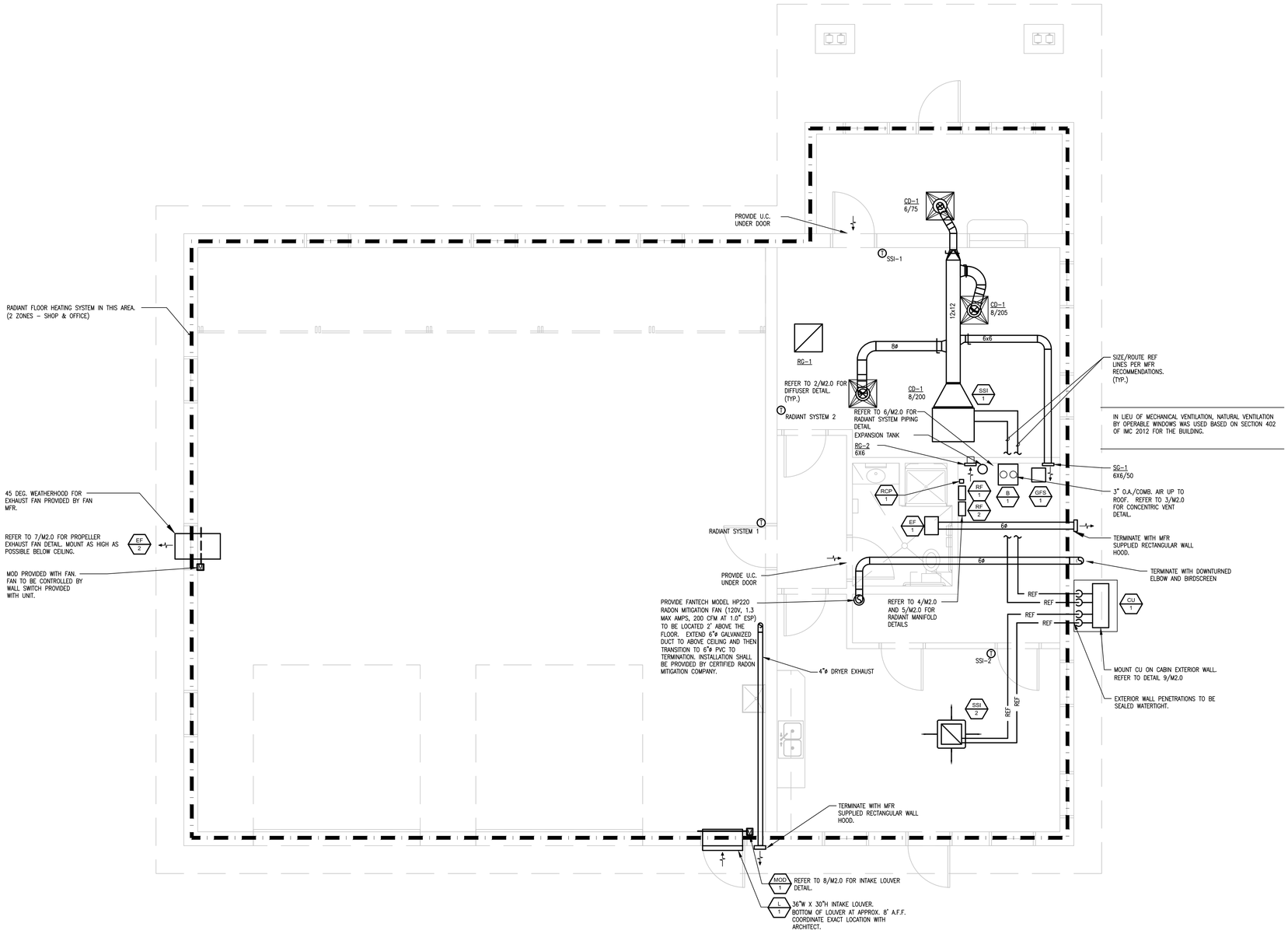

N

OFFICE FLOOR PLAN - MECHANICAL

SCALE: 1/4" = 1'-0"

CONSULTANT:
KCL ENGINEERING
300 4th St
West Des Moines, IA 50265
515.724.7838
info@kclengineering.com

IOWA DEPARTMENT OF NATURAL RESOURCES

ENGINEERING SERVICES - WALLACE BUILING
502 E. 9TH ST., DES MOINES, IA 50319-0034
P: 515.725.8200
F: 515.725.8202

OFFICE FLOOR PLAN - MECHANICAL

NEW OFFICE & STORAGE BUILDING FOR:
VIKING LAKE STATE PARK

2780 VIKING LAKE ROAD
STANTON, IA 51573

NO:	BY / DATE	REVISION

DRAWN BY: CB	PROJECT NUMBER: 17-04-69-02
CHK'D BY: JC	DATE: 10.24.2018
SHEET No: M1.0	

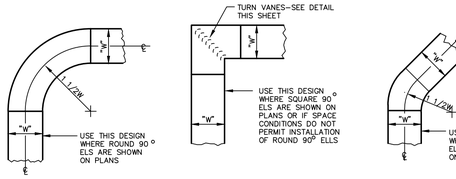

ROUND 90° ELBOW | SQUARE 90° ELBOW | ROUND 45° ELBOW | SQUARE 45° ELBOW

CONSTRUCTION OF 90° ELBOWS | CONSTRUCTION OF 45° ELBOWS

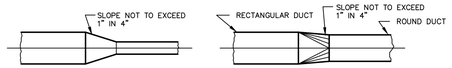

TYPICAL RECTANGULAR TRANSITION | TYPICAL RECTANGULAR TO ROUND TRANSITION

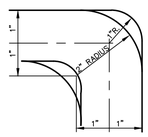

DETAIL OF TURN VANES

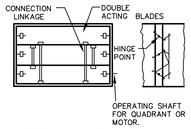

TYPICAL VOLUME DAMPER

INSTALLATION NOTES

1. ALL DUCTS SHALL BE CONSTRUCTED AND ERECTED IN A NEAT AND WORKMANLIKE MANNER.
2. DUCTS SHALL BE CONSTRUCTED OF THE WEIGHTS, GAGES AND MATERIAL AS SPECIFIED.
3. THE DIMENSION SHOWN FOR ALL DUCTS SHOWN IN PLAN GIVE THE WIDTH FIRST AND THEN THE HEIGHT.
4. DUCT RISERS SHOULD BE SUPPORTED BY ANGLES AT EVERY FLOOR.
5. AIR TURN SHALL BE INSTALLED IN ALL ABRUPT ELBOWS TO PREVENT TURBULENCE.
6. DUCTS SHALL BE SECURELY ATTACHED TO THE BUILDING CONSTRUCTION IN AN APPROVED MANNER.
7. DIVERGING TRANSITION PIECES SHALL BE MADE AS GRADUAL AS POSSIBLE.
8. INSTALL FIRE DAMPERS IN ACCORDANCE TO ALL APPLICABLE REQUIREMENTS INCLUDING UL 555.
9. ACCESS PANELS SHOULD BE PLACED BEFORE AND/OR AFTER EQUIPMENT INSTALLED IN THE DUCT.
10. DUCT AREA SHOULD NOT BE DECREASED MORE THAN 10 PERCENT WHEN OBSTRUCTIONS CANNOT BE AVOIDED, AND THEN A STREAMLINED FITTING SHOULD BE USED.
11. FLEXIBLE FABRIC CONNECTIONS (OR EQUAL) SHOULD BE USED ON BOTH INLETS AND OUTLETS OF ALL FANS AND AIR HANDLING UNITS.
12. JOINTS AND SEAMS OF SUPPLY DUCTS SHALL BE FASTENED SECURELY AND MADE AIR TIGHT.

1 DETAILS OF THE LOW VELOCITY DUCT LAYOUT

NOT TO SCALE

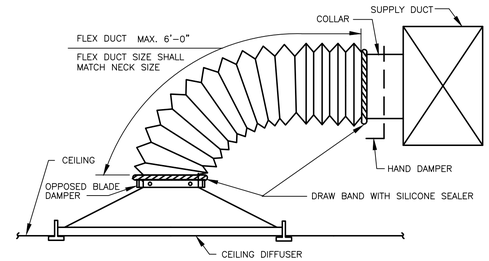

2 TYPICAL DIFFUSER CONNECTION

(SIDE OF DUCT CONNECTION)

NOT TO SCALE

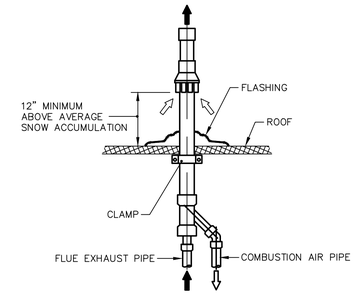

SIZE/ROUTE FLUE AND C.A. PIPING PER MFR RECOMMENDATIONS

3 CONCENTRIC ROOF TERMINATION

NOT TO SCALE

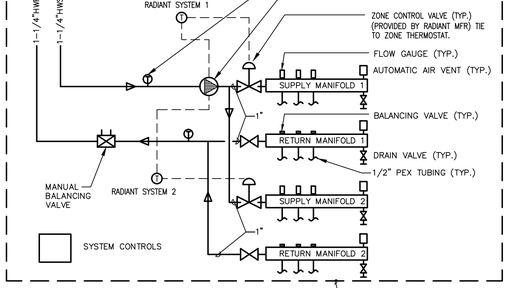

DIAGRAM IS SCHEMATIC IN NATURE. PROVIDE ADDITIONAL COMPONENTS AS REQUIRED AND INSTALL PER MFR RECOMMENDATIONS. INSTALL TUBING ON MINIMUM 2" EXTRUDED POLYSTYRENE INSULATION AND SET IN PLACE WITH CLIPS. WALL THERMOSTAT SHALL BE CAPABLE OF MONITORING SLAB TEMPERATURE AS WELL AS SPACE TEMPERATURE. REFER TO 15772 FOR ADDITIONAL DETAILS.

RADIANT CIRCULATION PUMP TO CYCLE ON/OFF TO MAINTAIN ZONE THERMOSTATS. ZONE THERMOSTATS SHALL ALSO OPEN/CLOSE ZONE CONTROL VALVES AS REQUIRED. PROVIDE CONTROLS AS REQUIRED. COORDINATE POWER REQUIREMENTS WITH ELECTRICIAN.

SECURE MANIFOLDS TO WALL PROVIDE 3/4" PLYWOOD BEHIND MANIFOLDS FOR MOUNTING.

4 IN-FLOOR RADIANT MULTI-ZONE SYSTEM DETAIL

NOT TO SCALE

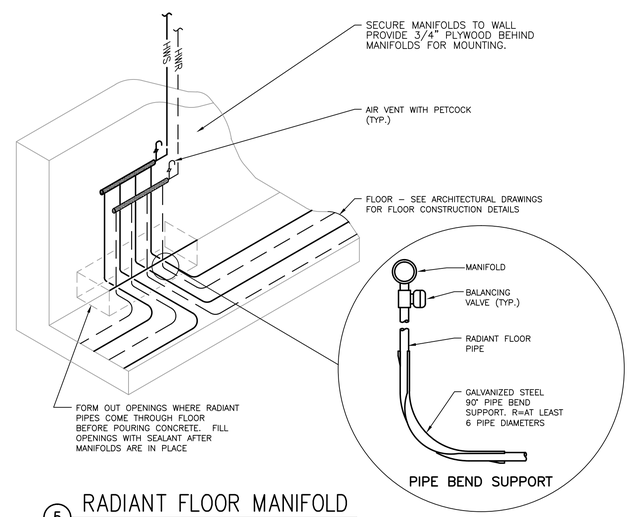

5 RADIANT FLOOR MANIFOLD

NOT TO SCALE

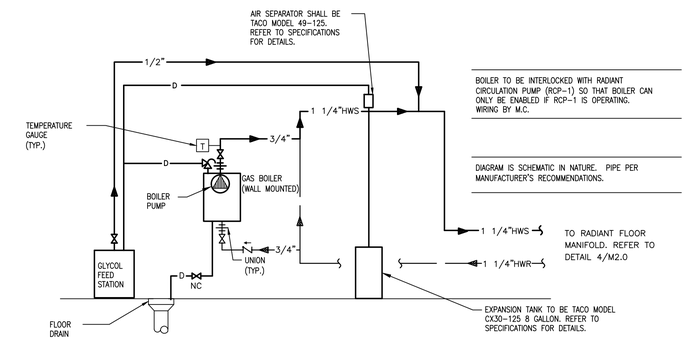

BOILER TO BE INTERLOCKED WITH RADIANT CIRCULATION PUMP (RCP-1) SO THAT BOILER CAN ONLY BE ENABLED IF RCP-1 IS OPERATING. WIRING BY M.C.

DIAGRAM IS SCHEMATIC IN NATURE. PIPE PER MANUFACTURER'S RECOMMENDATIONS.

6 RADIANT HEATING PIPING DIAGRAM

NOT TO SCALE

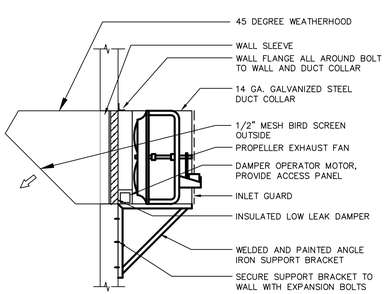

7 PROPELLER EXHAUST FAN

NOT TO SCALE

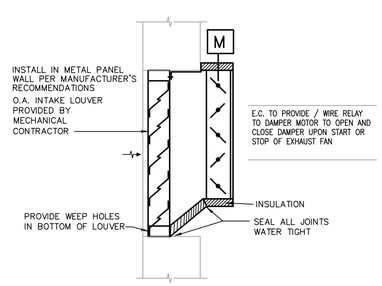

8 INTAKE LOUVER INSTALLATION

NOT TO SCALE

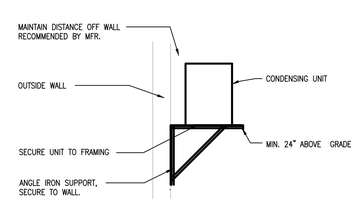

9 CONDENSING UNIT MOUNTING DETAIL

NOT TO SCALE

CONSULTANT:
KCL ENGINEERING
300 4th St
West Des Moines, IA 50265
515.724.7838
info@kclengineering.com

IOWA DEPARTMENT OF NATURAL RESOURCES

ENGINEERING SERVICES - WALLACE BUILDING
502 E. 9TH ST., DES MOINES, IA 50319-0034
P: 515.725.8200
F: 515.725.8202

MECHANICAL DETAILS

NEW OFFICE & STORAGE BUILDING FOR:

VIKING LAKE STATE PARK

2780 VIKING LAKE ROAD
STANTON, IA 51573

NO:	BY / DATE	REVISION

DRAWN BY: CB
PROJECT NUMBER: 17-04-69-02
CHK'D BY: JC
DATE: 10.24.2018
SHEET No: M2.0

CONDENSING UNIT SCHEDULE

REFERENCE	CU-1
MANUFACTURER	MITSUBISHI
MODEL #	MXZ-3B24NA
SERVES	SSI-1/SSI-2
NOMINAL TONS	2
COOLING CAP. (RATED/MIN.) (BTU/H)	25,000 / 12,600
HEATING CAP. (RATED/MIN.) (BTU/H)	30,600 / 11,400
LOW TEMP. HEATING CAP. (AT 17F) (BTU/H)	17,000
REFRIGERANT	R410A
# COMPRESSORS	1
SEER	16.3
HSPF	8.9
VOLTAGE/PH	240/1
MCA	18
OVERCURRENT PROTECTION (AMPS)	20
NOTES	1, 2, 3, 4

NOTES:
1. DISCONNECT SHALL BE PROVIDED / INSTALLED BY E.C.
2. UNIT TO BE MOUNTED TO BUILDING EXTERIOR WALL.
3. REFER TO SPLIT SYSTEM INDOOR UNIT SCHEDULE FOR CAP. RATING CONDITIONS.
4. HEATING MODE OF HEAT PUMP TO SERVE AS BACKUP FOR RADIANT FLOOR HEATING SYSTEM.

GAS HOT WATER BOILER SCHEDULE

REFERENCE	B-1
MANUFACTURER	LAARS
MODEL #	MLXH100
BOILER TYPE	INSTANTANEOUS CONDENSING
FUEL	L. P.
GAS PRESSURE (MIN/MAX)	4.0" / 14" W.C.
SERVES	RADIANT FLOOR SYSTEM
GAS INPUT (MBH)	100
GAS OUTPUT (MBH)	95
TURNDOWN	5:1
DIMENSIONS (W/H/D)	17"W X 31"H X 18"D
THERMAL EFFICIENCY (%)	95
ENTERING WATER TEMP (°F)	50
LEAVING WATER TEMP (°F)	120
COMB. AIR / FLUE DIAM	3"
VOLTAGE/PH	120/1
FLA (AMPS)	1.5
MCA	15
NOTES	1,2,3,4,5,6

NOTES:
1. 3/4" HWS/HWR CONNECTIONS
2. PROVIDE WITH PACKAGED BOILER CONTROLS.
3. PROVIDE CONDENSATE NEUTRALIZER FOR THE BOILER CONDENSATE DRAIN.
4. 3" EXHAUST VENT PIPE TO BE PVC/CPVC, PE, OR STAINLESS STEEL. 3" INTAKE CAN BE ABS, PVC, CPVC OR GALVANIZED. INSTALL PER MFR RECOMMENDATIONS.
5. PROVIDE PRIMARY BOILER PUMP WITH BOILER THAT COMES INSTALLED AND WIRED TO THE BOILER FROM THE FACTORY.
6. BOILER TO BE INTERLOCKED WITH RADIANT CIRCULATION PUMP (RCP-1) SO THAT BOILER CAN ONLY BE ENABLED WHEN RCP-1 IS OPERATING.

EXHAUST FAN SCHEDULE

REFERENCE	EF-1	EF-2
MANUFACTURER	GREENHECK	GREENHECK
MODEL #	SP-B110	SE1-14-432-A4
TYPE	IN-CEILING	PROPELLER
SERVES	BATHROOM	SHOP
CFM	75	1,300
ESP (IN. W.C.)	0.30	0.25
FAN RPM	950	1750
BELT/DIRECT	DIRECT	DIRECT
SPEED CONTROL (YES/NO)	YES	YES
SONES	2	8.4
DAMPER TYPE	GRAV. BACKDRAFT	M.O.D. (INSULATED LOW LEAK)
BHP	100 W	0.15
MOTOR HP	100 W	1/4
VOLTAGE/PH	120/1	120/1
NOTES	1,2,3	4,5,6,7,8

NOTES:
1. PLUG DISCONNECT BY FAN MFR.
2. FAN TO INCLUDE LOW PROFILE WHITE EXHAUST GRILLE.
3. FAN TO BE CONNECTED TO ROOM LIGHT SWITCH.
4. PROVIDE WITH POTENTIOMETER DIAL SPEED CONTROL TO BE LOCATED IN UNIT HOUSING.
5. PROVIDE WITH GREENHECK VCD-34-PB (MOUNTED) DAMPER AND 115 VAC ACTUATOR WITH UNIT.
6. FAN TO OPERATE BY WALL SWITCH PROVIDED WITH UNIT AND LOCATED BELOW UNIT. WIRING BY E.C.
7. EC TO POWER MOTORIZED DAMPER TO OPEN/CLOSE WITH FAN START OR STOP.
8. PROVIDE WITH DISCONNECT, 45 DEG. GALV. WEATHERHOOD WITH BIRDSCREEN AND LONG WALL HOUSING.

GLYCOL FEED STATION SCHEDULE

REFERENCE	GFS-1
MANUFACTURER	WESSELS
MODEL #	GMP-6
SERVES	RF-1 (RADIANT SYSTEM)
TANK VOLUME	6 GALLONS
UNIT DIMENSIONS	12" W X 12"D X 18" H
FACTORY DISCH. PRESS. SETTING	12 PSIG
VOLTAGE/PH	115/1
NOTES	1, 2, 3

NOTES:
1. DISCONNECT SHALL BE PROVIDED / INSTALLED BY E.C.
2. SYSTEM CONNECTION SIZE IS 1/2"NPT.
3. PROVIDE UNIT ABOVE, EQUIVALENT BY GENERAL TREATEMENT PRODUCTS OR PRE-APPROVED EQUAL.

PUMP SCHEDULE

REFERENCE	RCP-1
MANUFACTURER	TACO
MODEL #	L1130
SERVES	RADIANT FLOOR SYSTEM
GPM	8
TOTAL DEVELOPED HEAD (FT)	23
HP	1/8
PUMP RPM	3,250
VOLT/PHASE	120/1
NOTES	1, 2

NOTES:
1. E.C. TO PROVIDE DISCONNECT.
2. PUMP TO RUN TO MAINTAIN SPACE TEMP. REFER TO RADIANT MANIFOLD DETAILS.

SPLIT SYSTEM HEAT PUMP INDOOR UNIT SCHEDULE

REFERENCE	SSI-1	SSI-2
MANUFACTURER	MITSUBISHI	MITSUBISHI
MODEL #	SEZ-KD15NA	SLZ-KA12NA
TYPE	ABOVE CEILING DUCTED	CEILING CASSETTE
SERVES	OFFICES	CONFERENCE ROOM
NOMINAL TONS	1	1
MAX UNIT CFM	530	390
EXTERNAL STATIC PRESSURE (IN. W.G.)	0.2	N/A
COOLING CAP. (RATED/MIN.) (BTU/H)	14,100	11,100
HEATING CAP. (RATED/MIN.) (BTU/H)	18,000	13,600
REFRIGERANT	R410A	R410A
SEER	16.3	16.3
HSPF	8.9	8.9
VOLTAGE/PH	240/1	240/1
MCA	1	1
MOCP	SEE C.U. SCHEDULE	SEE C.U. SCHEDULE
NOTES	1, 2, 3, 4, 5, 6	1, 2, 3, 4, 5, 6

NOTES:
1. PROVIDE WITH REMOTE WALL MOUNTED THERMOSTAT.
2. INDOOR UNIT RECEIVES POWER FROM OUTDOOR UNIT BY INTERCONNECTED WIRING PROVIDED BY M.C. WIRING BY E.C.
3. COOLING RATED CAPACITY IS BASED ON THE FOLLOWING CONDITIONS. INDOOR: 80F/76F, OUTDOOR: 95F/75F
4. HEATING RATED CAPACITY IS BASED ON THE FOLLOWING CONDITIONS. INDOOR: 70F/60F, OUTDOOR: 47F/43F
5. HEATING MODE OF HEAT PUMP TO SERVE AS BACKUP FOR RADIANT FLOOR HEATING SYSTEM.
6. PROVIDE FILTER WITH UNIT AND PROVIDE UNIT WITH INTEGRAL CONDENSATE PUMP.

RADIANT FLOOR MANIFOLD SCHEDULE

REFERENCE	RF-1	RF-2
MANUFACTURER	ROTH RADIANT	ROTH RADIANT
MODEL #	NP MANIFOLD SET	NP MANIFOLD SET
SERVES	SHOP	OFFICE AREAS
SUPPLY WATER TEMP (F)	120	120
TUBE SPACING	12"	12"
TUBE SIZE (NOMINAL)	1/2"	1/2"
LOAD (BTUH/S.F.)	30	30
APPROX. SQ. FT OF COVERAGE	1,715	1,000
TOTAL LOAD (BTUH)	51,450	30,000
AMBIANT ROOM TEMP (F)	68	68
FLOOR COVERING	POLISHED CONCRETE	CARPET
TOTAL MANIFOLD GPM	5.5	2.5
MINIMUM LOOPS REQUIRED	7	5
MAXIMUM LOOP LENGTH (FT)	300	300
MAXIMUM TUBE & MANIFOLD PRESS. DROP (FT)	10	10
SYSTEM FLUID	30% PROPYLENE GLYCOL	30% PROPYLENE GLYCOL
NOTES	1	1

1. MFR TO PROVIDE OPEN/CLOSE TYPE CONTROL VALVE WITH MANIFOLD AND ZONE THERMOSTAT.

GRILLES REGISTERS AND DIFFUSERS SCHEDULE

REFERENCE	MATERIAL	MARGIN (IN)	INLET (IN)	FACE (IN)	DAMPER	MFR	MODEL	NOTES
CD-1 (SUPPLY DIFFUSER)	STEEL	NA	SEE DWG	24x24	NO	TITUS	OMNI	1,2
SG-1 (SUPPLY GRILLE)	ALUMINUM	1 1/4"	SEE DWG	INLET +2"	YES	TITUS	300FL	2
RG-1 (RETURN GRILLE)	STEEL	NA	FACE ONLY	24x24	NO	TITUS	PXP	1,2
RG-2 (RETURN GRILLE)	ALUMINUM	1 1/4"	SEE DWG	INLET +2"	YES	TITUS	350ZFL	2

NOTES:
1. REFER TO ARCH DRAWINGS FOR FINAL CEILING TYPE FOR MOUTING TYPE.
2. PROVIDE WITH WHITE FINISH.

MOTORIZED DAMPERS

REFERENCE	MOD-1
MANUFACTURER	GREENHECK
MODEL	VCD-34
SIZE (W X H) (IN.)	36 X 24
CFM	1,300
BLADE STYLE	OPPOSED
BLADE DIRECTION	HORIZONTAL
INSULATED	YES
ACTUATOR TYPE	ELECTRIC (120 V)
ACTUATOR STYLE	2 POSITION
POWER FAILURE POSITION	CLOSED
NOTES	1,2,3

NOTES:
1. EC TO POWER MOTORIZED DAMPER TO OPEN/CLOSE WITH FAN START OR STOP.
2. DAMPER SHOULD BE ULTRA LOW LEAK TYPE WITH GASKETED SEALS
3. PROVIDE UNIT ABOVE, EQUIVALENT BY AMERICAN WARMING & VENTILATING OR ENGINEER PRE-APPROVED EQUAL

LOUVER SCHEDULE

REFERENCE	L-1
MANUFACTURER	GREENHECK
MODEL	ESD-403
APPLICATION	INTAKE FOR SHOP
MATERIAL	ALUMINUM
SIZE (W X L X D) (IN.)	36 X 30 X 4
CFM	1,300
FREE AREA (SQ. FT.)	3.6
PRESSURE DROP (IN. W.C.)	0.02
FREE AREA VELOCITY (FPM)	375
BLADE DIRECTION	HORIZONTAL
INSTALLATION	S.I.P.S. METAL WALL
DRAINABLE	YES
NOTES	1,2,3,4

NOTES:
1. PROVIDE COLOR CHARTS TO ARCHITECT FOR COLOR SELECTION.
2. INSTALL PER MANUFACTURER'S RECOMMENDATIONS.
3. PROVIDE WITH BIRDSCREEN
4. PROVIDE LOUVER ABOVE, EQUIVALENT BY NCA, UNITED ENERTECH, AMERICAN WARMING & VENTILATING OR ENGINEER PRE-APPROVED EQUAL.

CONSULTANT:
KCL ENGINEERING
300 4th St
West Des Moines, IA 50265
515.724.7938
info@kclengineering.com

IOWA DEPARTMENT OF NATURAL RESOURCES
ENGINEERING SERVICES - WALLACE BUILING
502 E. 9TH ST., DES MOINES, IA 50319-0034
P: 515.725.8200
F: 515.725.8202

MECHANICAL SCHEDULES

NEW OFFICE & STORAGE BUILDING FOR:
VIKING LAKE STATE PARK
2780 VIKING LAKE ROAD
STANTON, IA 51573

NO.	BY / DATE	REVISION

DRAWN BY: CB
PROJECT NUMBER: 17-04-69-02
CHK'D BY: JC
DATE: 10.24.2018
SHEET No: M3.0

GENERAL NOTES

1. REFER TO M0.0 FOR GENERAL NOTES.
2. REFER TO PLUMBING ROUGH-IN SCHEDULE ON P3.0 FOR MINIMUM FIXTURE CONNECTION SIZES.

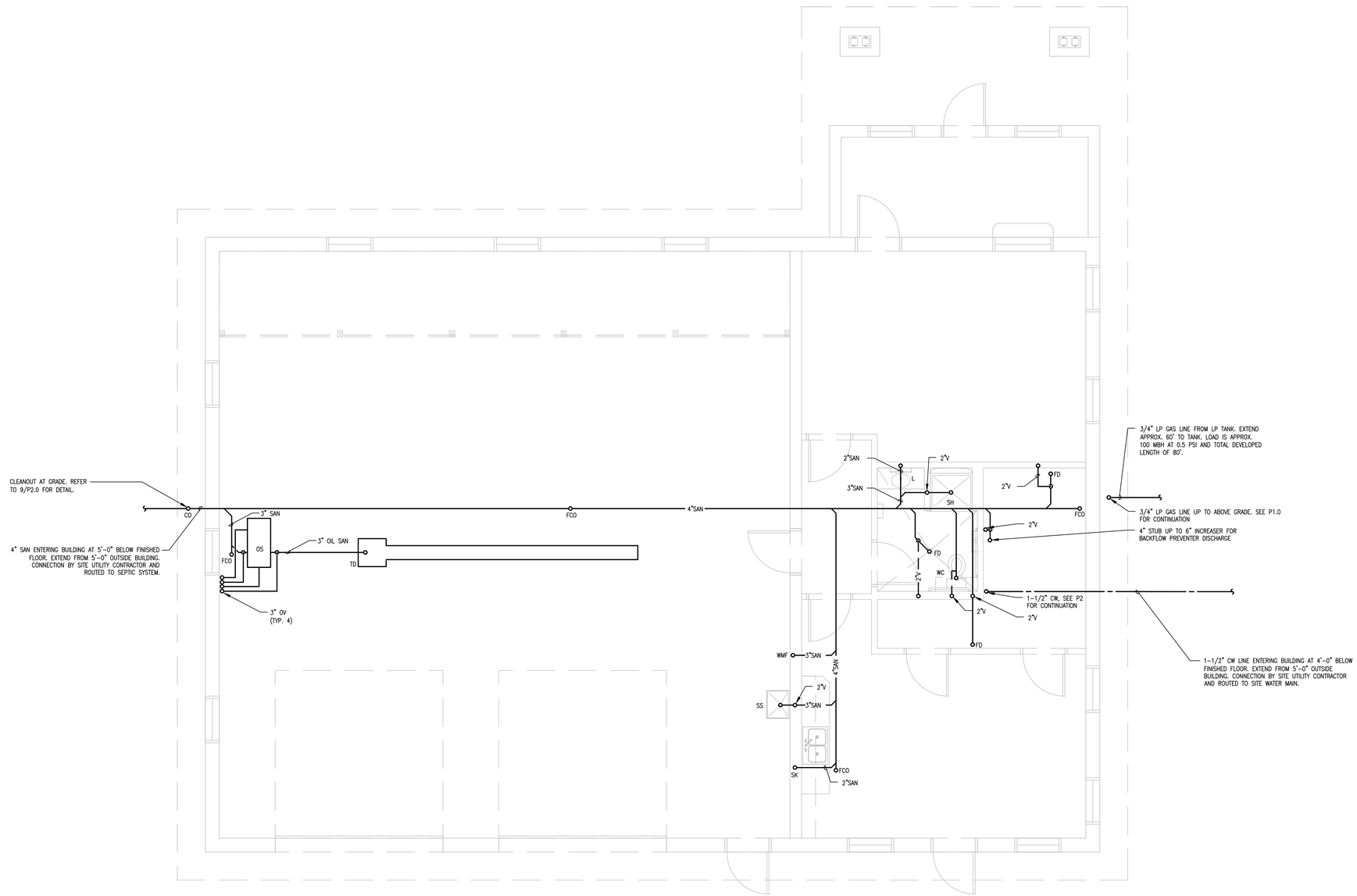

N

OFFICE UNDER FLOOR PLAN - PLUMBING

SCALE: 1/4" = 1'-0"

CONSULTANT:

KCL ENGINEERING
300 4th St
West Des Moines, IA 50265
515.724.7838
info@kclengineering.com

IOWA DEPARTMENT OF NATURAL RESOURCES

ENGINEERING SERVICES - WALLACE BUILING
502 E. 9TH ST., DES MOINES, IA 50319-0034
P: 515.725.8200
F: 515.725.8202

OFFICE UNDER FLOOR PLAN - PLUMBING

NEW OFFICE & STORAGE BUILDING FOR:
VIKING LAKE STATE PARK

2780 VIKING LAKE ROAD
STANTON, IA 51573

NO:	BY / DATE	REVISION

DRAWN BY: CB	PROJECT NUMBER: 17-04-69-02
CHK'D BY: JC	DATE: 10.24.2018
SHEET NO: P0.0	

GENERAL NOTES

1. REFER TO M0.0 FOR GENERAL NOTES.
2. REFER TO PLUMBING ROUGH-IN SCHEDULE ON P3.0 FOR MINIMUM FIXTURE CONNECTION SIZES.
3. REFER TO 3/P2.0 FOR FLOOR DRAIN DETAIL.
4. REFER TO 5/P2.0 FOR CLEVIS PIPE HANGER DETAIL.
5. REFER TO 8/P2.0 FOR VENT THRU ROOF DETAIL.
6. REFER TO 6/P2.0 FOR FLOOR CLEANOUT DETAIL.
7. ALL EXTERIOR AND INTERIOR EXPOSED GAS LINES SHALL BE PAINTED PER ARCHITECTS COLOR CHOICE.

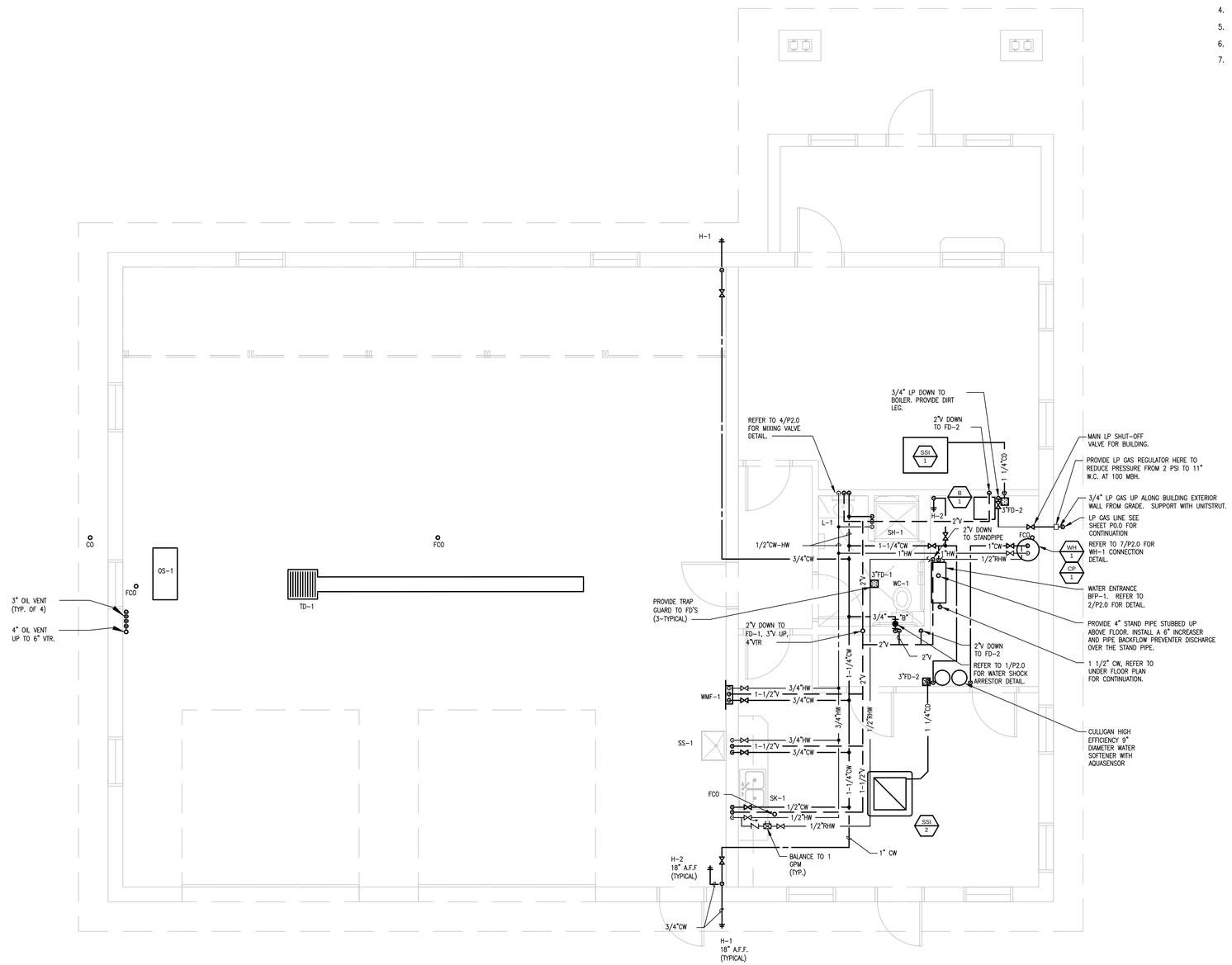

OFFICE FLOOR PLAN - PLUMBING

SCALE: 1/4" = 1'-0"

CONSULTANT:
KCL ENGINEERING
300 4th St
West Des Moines, IA 50265
515.724.7938
info@kclengineering.com

IOWA DEPARTMENT OF NATURAL RESOURCES

ENGINEERING SERVICES - WALLACE BUILING
502 E. 9TH ST., DES MOINES, IA 50319-0034
P: 515.725.8200
F: 515.725.8202

OFFICE FLOOR PLAN - PLUMBING

NEW OFFICE & STORAGE BUILDING FOR:
VIKING LAKE STATE PARK

2780 VIKING LAKE ROAD
STANTON, IA 51573

NO:	BY / DATE	REVISION

DRAWN BY: CB
PROJECT NUMBER: 17-04-69-02
CHK'D BY: JC
DATE: 10.24.2018
SHEET No: P1.0

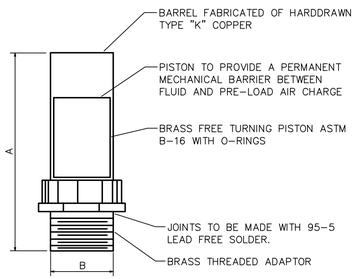

SIZE	SYMBOL	FIXTURE UNIT RATINGS	A SIZE	B SIZE
1/2"	A	1 – 11	5"	1/2"
3/4"	B	12 – 32	5"	3/4"
1"	C	33 – 60	7"	1"
1-1/4"	D	61 – 113	7"	1-1/4"
1-1/2"	E	114 – 154	9"	1-1/2"
2"	F	155 – 330	9"	2"

1 WATER SHOCK ARRESTOR DETAIL
NOT TO SCALE

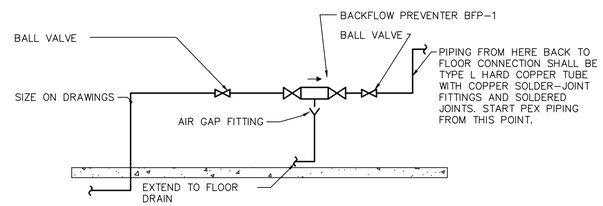

2 DOMESTIC WATER RISER DIAGRAM
NOT TO SCALE

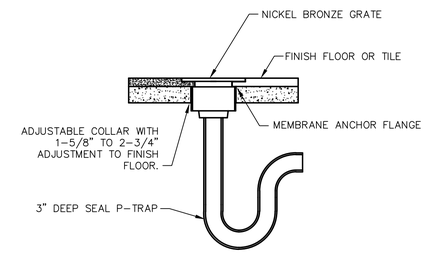

3 FLOOR DRAIN DETAIL
NOT TO SCALE

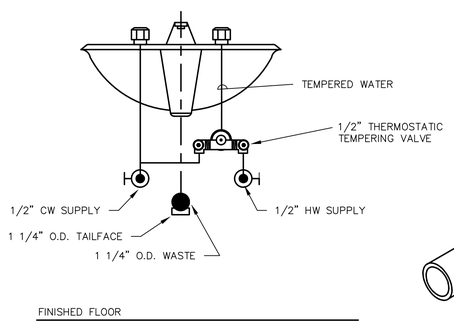

4 LOCAL MIXING VALVE DETAIL
NOT TO SCALE

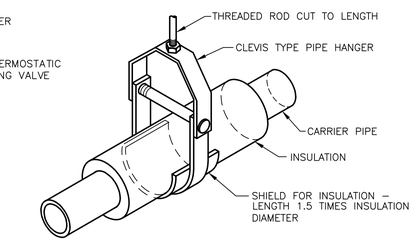

5 CLEVIS TYPE PIPE HANGER FOR INSULATED PIPE
NOT TO SCALE

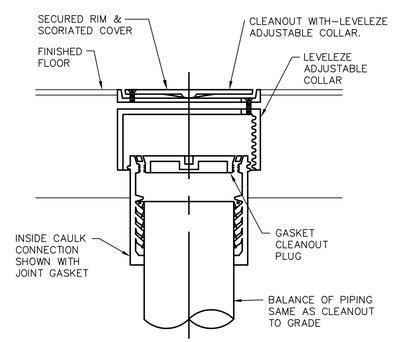

6 FLOOR CLEANOUT DETAIL
NOT TO SCALE

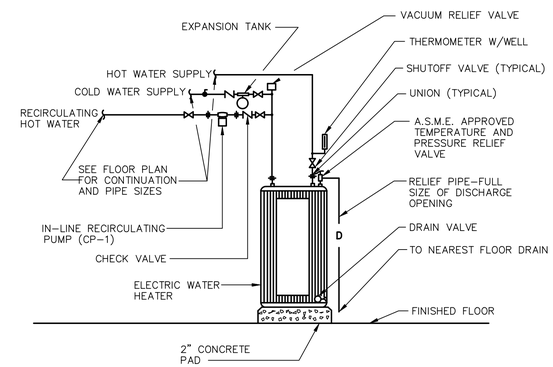

7 WATER HEATER DETAIL
NOT TO SCALE

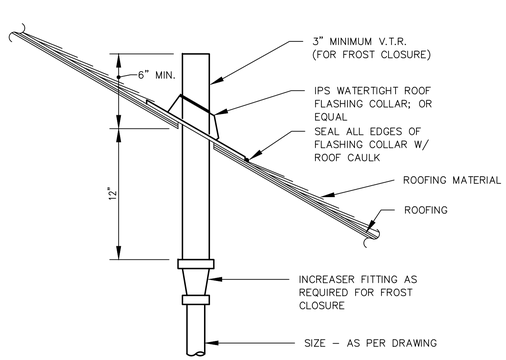

8 PLUMBING VENT THROUGH PITCHED ROOF DETAIL
NOT TO SCALE

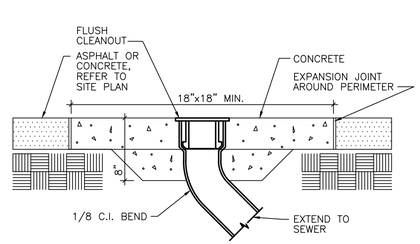

9 CLEANOUT AT GRADE
NOT TO SCALE

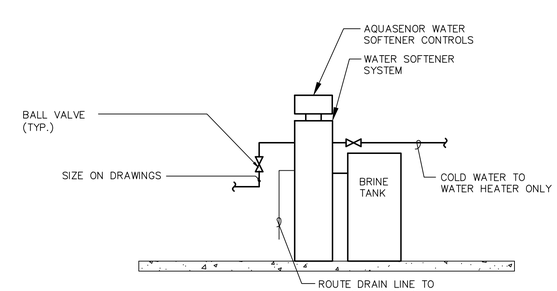

10 WATER SOFTENER DIAGRAM
NOT TO SCALE

CONSULTANT:
KCL ENGINEERING
300 4th St
West Des Moines, IA 50265
515.724.7938
info@kclengineering.com

IOWA DEPARTMENT OF NATURAL RESOURCES
ENGINEERING SERVICES - WALLACE BUILING
502 E. 9TH ST., DES MOINES, IA 50319-0034
P: 515.725.8200
F: 515.725.8202

PLUMBING DETAILS
NEW OFFICE & STORAGE BUILDING FOR:
VIKING LAKE STATE PARK
2780 VIKING LAKE ROAD
STANTON, IA 51573

NO:	BY / DATE	REVISION

DRAWN BY: CB
PROJECT NUMBER: 17-04-69-02
CHK'D BY: JC
DATE: 10.24.2018
SHEET No: P2.0

PLUMBING FIXTURE SCHEDULE

REFERENCE	MFR	MODEL	DESCRIPTION	TRIM
BFP-1	WATTS	009/909	BACKFLOW PREVENTOR - REDUCED PRESSURE ZONE ASSEMBLY, BRONZE BODY CONSTRUCTION OR FDA APPROVED EPOXY COATED CAST IRON. INTERNAL PRESSURE RELIEF VALVE BETWEEN TWO CHECK VALVES. REPLACABLE SILICONE SEAT DISCS. PROVIDE WITH AIR GAP DRAIN FITTING. SERVICE OF ALL COMPONENTS SHALL BE THROUGH SINGLE ACCESS BRONZE COVER WITH STAINLESS BOLTS. COMPLY WITH AWWA AND ASSE.	NA
FCO-1	ZURN	Z1400	ADJUSTABLE FLOOR CLEANOUT, CAST IRON BODY, TAPERED THREAD PLUG AND ROUND NICKEL BRONZE SCORIATED CAST IRON HEAVY-DUTY SECURED TOP, ADJUSTABLE TO FINISHED FLOOR. OUTLET SIZE AS NOTED ON DRAWINGS.	NA
FD-1	ZURN	ZB-415-6B-P-ZB	CAST IRON BODY FLOOR DRAIN,TYPE "B" 6" ROUND POLISHED NICKEL BRONZE STRAINER, DEEP SEAL TRAP. OUTLET SIZE AS NOTED ON DRAWINGS, MIN. 3".	NA
FD-2	ZURN	Z-415	CAST IRON BODY FLOOR DRAIN,TYPE "B" 8" ROUND POLISHED BRONZE STRAINER, DEEP SEAL TRAP. OUTLET SIZE AS NOTED ON DRAWINGS, MIN. 3".	NA
H-1	WOODFORD	MB67	FREEZELESS, WALL HYDRANT, BRASS VALVE BODY AND SEAT, STANDARD FINISH, NON-FERROUS METAL STEM, HIGH FLOW DOUBLE CHECK BACKFLOW PREVENTER, LOCKABLE COMPOSITE BOX W/COVER PLATE, 3/4" MALE HOSE THREAD, ASSE 1052 APPROVED AND IAPMO LISTED. INSTALL AT 18" ABOVE FINISH GRADE.	NA
H-2	WOODFORD	MODEL 24	WALL HYDRANT, BRASS VALVE BODY AND SEAT, STANDARD FINISH, NON-FERROUS METAL STEM, VACUUM BREAKER - ANTI-SIPHON, 3/4" MALE HOSE THREAD, ASSE 1011 APPROVED, CSA AND IAPMO LISTED. INSTALL AT 18" ABOVE FINISH GRADE.	NA
L-1	KOHLER	K-2210	UNDER COUNTER MOUNT VITREOUS CHINA LAVATORY, WITH OVERFLOW, PROVIDE WITH CLAMP ASSEMBLY, ADA COMPIANT.	DELTA "21C" OR APPROVED EQUAL TWO HANDLE TYPE FAUCET, WITH METAL POP-UP AND TRAP, LEVER BLADE HANDLES. MAXIMUM FIXTURE FLOW TO BE 0.5 GPM. PROVIDE POWERS "LM495" POINT OF USE MIXING VALVE UNDER FIXTURE. MIXING VALVE MUST MEET ASSE 1070 AND IPC 2009 REQUIREMENTS. PROVIDE WITH 1/4 TURN, 3/8" BRASS STOPS. PROVIDE WITH TRUEBRO "LAV GUARD" CW/HW AND WASTE PIPE GUARDS AND ESCUTCHEONS.
OS-1	ROCKFORD	OST-5624-50	OIL/WATER SEPARATOR, ALL WELDED A36 1/4" STEEL, 25 GPM INTERMITTENT FLOW, 45 GALLON STATIC CAPACITY WITH 50 GALLON WASTE OIL STORAGE, 3" THREADED INLET/OUTLET AND 3" THREADED VENT CONNECTIONS (4), VISIBLE DOUBLE-WALL OUTSIDE TRAP SEAL, REMOVABLE FILTER SCREEN, NON-REMOVABLE SEPARATOR SCREENS, 3/8" NONSKID TREADPLATE COVER FOR VEHICLE TRAFFIC LOAD WITH HEAVY DUTY LEAKPROOF GASKET. PROVIDE WITH EXTENSION AS REQUIRED TO INSTALL UNIT FLUSH WITH GRADE.	NA
SH-1	FREEDOM SHOWERS	APFQ3682BF625	ADA ACRYLIC SHOWER MODULE, 36"L X 36"W AND 81"H, SHOWER DRAIN, FOLD UP SEAT, MOLDED-IN FLOOR PATTERN, INTEGRAL SOAP LEDGES AND "PIT" INSTALLATION OPTION, STAINLESS STEEL GRAB BARS. COORDINATE "PIT" INSTALLATION WITH FLOOR PRIOR TO POURING SLAB.	POWERS "E710" OR APPROVED EQUAL THERMOSTATIC/PRESSURE SHOWER VALVE, 2.5 GPM FLOW, 1/2" IPS SUPPLY INLETS, CHECK STOPS AND INTEGRAL STRAINER. SYMMONS "H321-V" OR APPROVED EQUAL SHOWERHEAD, 2.5 GPM, 5' METAL HOSE AND 30" VERTICAL BAR, POLISHED CHROME, INTEGRAL VACUUM BREAKER. COORDINATE MOUNTING HEIGHTS WITH ARCHITECT.
SK-1	ELKAY	ELUHE3118	DOUBLE BOWL, UNDER COUNTER MOUNT, P-TRAP, BOWL DIMENSIONS: 13.5" L x16" W x 8" D. UNDERCOATED, BASKET STRAINER. VERFIY FINAL DIMENSIONS FROM ARCH ELEVATION AND MILWORK DRAWINGS.	DELTA "101LF-HDF" OR APPROVED EQUAL, BRASS CONSTRUCTION, CHROME-PLATED FINISH, SWING SPOUT FAUCET, 8" REACH, 1.5 GPM AERATOR, SINGLE LEVER HANDLE, SEPARATE SPRAY WASH, TWO HOLE SUPPLIES FAUCET. PROVIDE WITH 1/4 TURN, 3/8" BRASS STOPS.
SS-1	FIAT	L-1	WHITE MOLDED STONE WALL HUNG LAUNDRY TUB, 18 1/2" L X 24" W X 13"D, DRAIN WITH STOPPER, 17 GAL. HOLDING CAPACITY, HEAVY GAUGE GALVANIZED STEEL BRACKET CAPABLE OF WITHSTANDING 600 LBS.	PROVIDE WITH CHROME PLATED BRASS DECK TYPE 4" CENTERSET FAUCET WITH 6 3/4" SERVING SPOUT THAT MOUNTS ON REAR DECK. PROVIDE FAUCET WITH HOSE ADAPTER AS REQUIRED FOR 3/4" MALE HOSE THREAD. PROVIDE WITH P-TRAP AND SUPPLY RISERS.
TD-1	ZURN	886-HD	TRAFFIC RATED TRENCH DRAIN CONSTRUCTED OF PRE-MANUFACTURED POLYETHYLENE TRENCH FORMING SYSTEM , 6.75" WIDE, 21' TOTAL LENGTH (COORDINATE WITH FLOOR PRIOR TO ORDERING), PRE-SLOPED AT 1/8" PER FOOT, ROUNDED BOTTOM, INTERGAL DEFORMING GROVES, STEEL SUPPORT RAILS AND ANCHORING STUDS, HEAVY DUTY CAST IRON GRATE H-20 RATED, INTERGAL 24 X 24 CATCH BASIN WITH EXTRA HEAVY DUTY GRATE AND REMOVABLE SEDIMENT BASKET.	NA
WC-1 (ADA)	KOHLER	K-3979	FLOOR MOUNTED, 1.6 GPF, WHITE VITREOUS CHINA, ELONGATED BOWL, TANK TYPE TOILET, POLISHED CHROME TRIP LEVER, ADA COMPLIANT HEIGHT.	PROVIDE WITH ELONGATED SEAT, COVER AND 3/8" NPT ANGLE SUPPLY WITH STOP.
WMF-1	OATEY	SERIES 38000	WASHING MACHINE FIXTURE - POLYSTYRENE ENCLOSURE, 2" CENTER DRAIN, TWO QUARTER-TURN ANGLE VALVES WITH 1/2" THREADED OUTLETS.	NA

NOTES:
1. REFER TO PLUMBING FIXTURE SCHEDULE FOR MINIMUM CONNECTION SIZES.

DOMESTIC CIRC. PUMP

REFERENCE	CP-1
MANUFACTURER	BELL&GOSSETT
MODEL #	PL-30
TYPE	INLINE
SERVES	DOM. WATER
GPM	1
MOTOR HP	0.08
FT HEAD	10
VOLTAGE/PH	115/1
NOTES	1,2

NOTES:
1. PUMP TO OPERATE PER TIMER PROVIDED/WIRED BY M.C.
2. EC TO PROVIDE DISCONNECT.

ELECTRIC WATER HEATER

REFERENCE	WH-1
MANUFACTURER	AO SMITH
MODEL #	ECT-40
SERVES	BUILDING
GALLONS	40
ENERGY FACTOR	0.92
RECOVERY GPM 90F RISE	21
INPUT KW	4.50
VOLTAGE/PH	240 / 1
NOTES	1,2

NOTES:
1. UNIT TO BE CSA CERTIFIED AND ASME RATED T&P RELIEF VALVE
2. UNIT TO MEET REQUIREMENTS OF ASHRAE 90.1

PLUMBING FIXTURES ROUGH-IN SCHEDULE

FIXTURE	CW	HW	VENT	WASTE	NOTES
LAVATORY	1/2"	1/2"	1 1/2"	1 1/2"	1,2
SINK	1/2"	1/2"	1 1/2"	1 1/2"	1,2
WATER CLOSET (TANK)	1/2"	-	2"	4"	1,2
SERVICE SINK	1/2"	1/2"	1 1/2"	3"	1,2
SHOWER	1/2"	1/2"	1 1/2"	3"	1,2
FLOOR DRAIN	-	-	2"	3"	1,2

NOTES:
1. ALL SIZES SHOWN ARE MINIMUM CONNECTION SIZES, REFER TO DRAWINGS FOR FINAL SIZES.
2. ALL BELOW FLOOR WASTE SIZES ARE TO BE A MINIMUM OF 2".

CONSULTANT:
KCL ENGINEERING
300 4th St
West Des Moines, IA 50265
515.724.7938
info@kclengineering.com

IOWA DEPARTMENT OF NATURAL RESOURCES
ENGINEERING SERVICES - WALLACE BUILING
502 E. 9TH ST., DES MOINES, IA 50319-0034
P: 515.725.8200
F: 515.725.8202

PLUMBING SCHEDULES

NEW OFFICE & STORAGE BUILDING FOR:
VIKING LAKE STATE PARK
2780 VIKING LAKE ROAD
STANTON, IA 51573

NO.	BY / DATE	REVISION

DRAWN BY: CB
PROJECT NUMBER: 17-04-69-02
CHK'D BY: JC
DATE: 10.24.2018
SHEET No: P3.0

ELECTRICAL GENERAL NOTES

1. COORDINATE LOCATION/INSTALLATION OF MECHANICAL AND ELECTRICAL WORK WITH ALL OTHER TRADES. NO ASPECT OF A SYSTEM INSTALLATION OR ITS ROUGH-IN SHALL COMMENCE UNTIL PROPER AND TIMELY COORDINATION WITH ALL TRADES ASSOCIATED WITH THE INSTALLATION HAS TRANSPIRED. ITEMS TO BE COORDINATED SHALL INCLUDE BUT NOT BE LIMITED TO: BUILDING STRUCTURE, SHEET METAL, ALL PIPING SYSTEMS, LIGHT FIXTURES, CONDUITS, CABLE TRAYS, ETC. REFER TO ALL GENERAL, MECHANICAL, AND ELECTRICAL DRAWINGS AND SPECIFICATIONS FOR THIS PROJECT.
2. WARNING – CALL 48 HOURS BEFORE YOU DIG: – IOWA LAW REQUIRES ANYONE DOING ANY EXCAVATION, FENCING, PLANTING OR DRILLING TO CALL 48 HOURS IN ADVANCE. HAND DIG WITHIN 18 INCHES OF ANY LOCATE MARK OR FLAG. IOWA ONE-CALL 1-800-292-8989.
3. EXISTING CONDUITS MAY BE RETAINED FOR CONTINUED USE AS APPLICABLE.
4. DO NOT CUT EXISTING TELECOMMUNICATION WIRING, CABLES OR CONDUIT AS EXISTING SYSTEMS SHALL REMAIN OPERATIONAL DURING ALL PHASES OF CONSTRUCTION. CONTRACTOR WHO CUTS IN-SERVICE CABLES SHALL BE RESPONSIBLE FOR ANY AND ALL DOWNTIME AND COSTS TO REPAIR.
5. ALL REQUIRED OVERALL BUILDING SYSTEMS (EXISTING AND/OR NEW) ARE TO BE KEPT OPERATIONAL IN ALL OCCUPIED AREAS OF THE BUILDING THROUGH THE DURATION OF THE PROJECT.
6. ALL 120V-1 PHASE CIRCUITRY EXCEEDING 100LF TO CENTER OF LOAD SHALL HAVE CONDUCTORS INCREASED TO ACCOUNT FOR VOLTAGE DROP.
7. PROVIDE REQUIRED ELECTRICAL CONNECTIONS AND ACCESSORIES INCLUDING STARTERS, DISCONNECTS, CONTROL WIRING, ETC. AS REQUIRED FOR THE BUILDING MECHANICAL EQUIPMENT. INFORMATION HEREIN AND ON THE DRAWINGS IS FOR GENERAL DESCRIPTION AND ESTIMATING PURPOSES ONLY. VERIFY VOLTAGE, AMPERAGE, PHASE, INRUSH, ETC. FOR EACH ITEM OF EQUIPMENT BEFORE PROCEEDING WITH WIRING FOR IT. WIRING DETAILS SHALL BE IN ACCORDANCE WITH INSTRUCTIONS TO BE FURNISHED BY THE SUPPLIERS OF THE EQUIPMENT AS NECESSARY TO PROVIDE PROPER OPERATION OF THE EQUIPMENT.
8. ELECTRICAL CONTRACTOR SHALL PROVIDE FIRESTOPPING AT ALL PENETRATIONS PER NFPA.
9. NOTE THAT THE ELECTRICAL DRAWINGS ARE ONLY A PORTION OF THE COMPLETE SET OF PLANS. THE COMPLETE SET OF PLANS SHALL BE USED TO DEFINE THE ELECTRICAL WORK. THIS SHALL INCLUDE, BUT NOT BE LIMITED TO, USING THE ARCHITECTURAL PLANS FOR DIMENSIONS AND DETAILS; EQUIPMENT PLANS FOR ROUGH-IN REQUIREMENTS, AND THE MECHANICAL PLANS FOR EQUIPMENT SIZES AND LOCATIONS.
10. VERIFY LOCATION OF ALL MECHANICAL EQUIPMENT WITH MECHANICAL DRAWINGS.
11. FIELD COORDINATE THE LOCATION OF ALL LIGHT FIXTURES WITH OTHER TRADES. IF A CONFLICT IS FOUND, CONTACT THE ENGINEER FOR A SOLUTION TO THE PROBLEM.
12. PROVIDE AN ADDITIONAL J-BOX WHERE THE NUMBER OF CONDUCTORS ENTERING AND EXITING A LIGHT FIXTURE J-BOX EXCEEDS 8.
13. RACEWAYS AND BOXES ARE SHOWN DIAGRAMMATICALLY ONLY AND INDICATE THE GENERAL AND APPROXIMATE LOCATION. THE LAYOUT DOES NOT NECESSARILY SHOW THE TOTAL NUMBER OF RACEWAYS OR BOXES FOR THE CIRCUITS REQUIRED, NOR ARE THE LOCATIONS OF INDICATED RUNS INTENDED TO SHOW THE ACTUAL ROUTING OF THE RACEWAYS.
14. VERIFY ALL WALL LOCATIONS AND DOOR SWINGS WITH ARCHITECTURAL DRAWINGS. LOCATE THE LIGHT SWITCHES ON THE LATCH SIDE OF THE DOOR.
15. ELECTRICAL SPACE SHALL BE A DEDICATED SPACE EXTENDING FROM FLOOR TO STRUCTURAL CEILING AND SHALL CONTAIN NO DUCTS, FANS, PIPES, OR OTHER EQUIPMENT FOREIGN TO THE ELECTRICAL EQUIPMENT PURSUANT TO SECTION 110.26.F OF THE CURRENT NEC.
16. ALL WALL MOUNTED DEVICES SHALL BE AT +18" ABOVE FINISHED FLOOR UNLESS OTHERWISE NOTED.
17. ALL LIGHT FIXTURES, SWITCHES, DEVICES, ETC. ARE SHOWN IN PREFERRED LOCATION. E.C. RESPONSIBLE FOR MODIFYING CONDUIT, HANGERS, CIRCUITING, ETC. TO PROVIDE A COMPLETE AND OPERATIONAL SYSTEM. E.C. IS RESPONSIBLE FOR FIELD VERIFICATION PRIOR TO BID AND FAMILIARIZE THEMSELVES WITH ALL EXISTING CONDITIONS.
18. INSTALL STAINLESS STEEL COVER PLATE OVER HOLE AT REMOVED DEVISE LOCATION, INCLUDING BUT NOT LIMITED TO, CLOCKS, RECEPTACLES, SWITCHES, JUNCTION BOXES, ETC.
19. UNLESS NOTED OTHERWISE WIRE ALL EMERGENCY BALLAST LIGHTS WITH NON-SWITCHED HOT.

ELECTRICAL PLAN NOTES

1. ALL WIRING TO BE RUN IN CONDUIT, AND ALL CONDUIT TO BE RUN CONCEALED IN ALL AREAS.
2. THE ENTIRE PROJECT SHALL COMPLY WITH THE CURRENT ISSUE OF THE NATIONAL ELECTRIC CODE (NEC) INCLUDING AMENDMENTS, AND WITH ALL STATE, LOCAL, AND OTHER CODES AS APPLICABLE. THE CURRENT ISSUE SHALL BE THE ISSUE THAT IS IN EFFECT WHEN THE CONTRACTS ARE AWARDED FOR THE WORK. THE INTERPRETATIONS AND DECISIONS OF THE AUTHORITY HAVING JURISDICTION OF APPLICABLE CODES SHALL GOVERN.
3. WHERE A CONFLICT EXISTS BETWEEN THE APPLICABLE CODES AND THE PLANS AND THE SPECIFICATIONS, THE ONE SHALL BE FOLLOWED WHICH RESULTS IN THE HIGHER QUALITY, MOST COMPLETE INSTALLATION.
4. ELECTRICAL DRAWINGS ARE SCHEMATIC. REFERENCE SHALL BE MADE TO ARCHITECTURAL AND MECHANICAL DRAWINGS FOR DIMENSIONS, TYPE OF CONSTRUCTION, LAYOUT, DOOR SWINGS, CEILING TYPES, ETC. UNLESS DIMENSIONED, ELECTRICAL ITEMS ARE SHOWN IN APPROXIMATE LOCATIONS. MINOR RELOCATIONS OF THESE ITEMS MAY BE MADE BY THE CONSTRUCTION REPRESENTATIVE AT NO EXPENSE TO THE OWNER.
5. ALL WIRING DEVICES, SWITCHES, RECEPTACLES, ETC., TO BE FLUSH MOUNTED UNLESS OTHERWISE NOTED.
6. THIS CONTRACTOR SHALL BE RESPONSIBLE FOR OBTAINING ALL REQUIRED STATE AND LOCAL PERMITS AND ASSOCIATED FEES.
7. THIS CONTRACTOR SHALL BE RESPONSIBLE FOR COORDINATION WITH OTHER TRADES TO AVOID CONFLICTS AND TO VERIFY ALL EQUIPMENT CONNECTIONS, AND FOR COMPLETE INSTALLATION AND CONNECTION.
8. THIS CONTRACTOR SHALL BE RESPONSIBLE FOR INSTALLING A COMPLETE ELECTRICAL SYSTEM PER CONTRACT DRAWINGS AND ENSURING THAT THE SYSTEM IS OPERATIONAL UPON JOB COMPLETION.
9. COORDINATE ALL WIRING DEVICE LOCATIONS AND ELEVATIONS INDICATED ON PLANS WITH THE OWNER, ARCHITECT AND FINAL FURNITURE/EQUIPMENT LAYOUTS.
10. MAXIMUM LOAD PER 20A/1P CIRCUIT. 1920 WATTS AT 120V.
11. VOLTAGE DROP SHALL BE LIMITED TO 3% ON ALL BRANCH CIRCUITS.
12. INSTALL CONDUIT WITH SIZES AS INDICATED OR REQUIRED RIGIDLY SECURED IN PLACE WITH NOT LESS THAN ONE MALLEABLE, CORROSION PROOF, ALLOY STRAP OR HANGER PER EIGHT FEET OF CONDUIT. PERFORATED STRAPPING IS NOT ACCEPTABLE.
13. SUPPORT ALL CONDUITS FROM STRUCTURAL SLABS, WALLS, STRUCTURAL MEMBERS AND ROOF JOISTS. DO NOT SUPPORT CONDUITS FROM CEILING TIE WIRES, DUCTWORK, PIPING OR OTHER NONSTRUCTURAL MEMBERS.
14. ALL WALL AND CEILING FIXTURES SHALL BE INDEPENDENTLY AND SECURELY MOUNTED SO THAT THEY ARE NOT DEPENDENT ON CEILING FINISH FOR SUPPORT AND CANNOT BE ROTATED OR DISPLACED.
15. FIXTURES AND DEVICES MOUNTED IN SUSPENDED ACOUSTICAL TILE SHALL HAVE CHANNEL SUPPORTS ACROSS THE MAIN GRID RUNNERS OR GRID SUPPORTS, SECURELY TIED DOWN OR ANCHORED SO AS NOT TO CAUSE TILE TO SAG AND SO THAT FIXTURE OR DEVICE CANNOT BE LIFTED, ROTATED OR DISPLACED.
16. PROVIDE AND INSTALL GRID TROFFER SUPPORT CLIPS.

ELECTRICAL ABBREVIATIONS

ACT	DEVICE MOUNTED +8" ABOVE COUNTER TOP
EC	ELECTRICAL CONTRACTOR
G	GROUND FAULT CIRCUIT INTERRUPTER
MC	MECHANICAL CONTRACTOR
MOD	MOTOR OPERATED DAMPER
NS	NON-SWITCHED LIGHT FIXTURE
WP	WEATHERPROOF DEVICE

ELECTRICAL SYMBOLS

- RECESSED TROFFER
- PENDANT MOUNTED FIXTURE
- STRIP FIXTURE
- SURFACE MOUNTED FIXTURE
- RECESSED DOWNLIGHT
- L1 — WALL MOUNTED LIGHT FIXTURE – HEIGHT AS NOTED
- DUPLEX RECEPTACLE, +18" OR AS NOTED
- G — DUPLEX GROUND FAULT RECEPTACLE, +18" OR AS NOTED
- WP — DUPLEX GROUND FAULT "WR"-TYPE RECEPTACLE WITH IN-USE WEATHERPROOF COVER, +24" OR AS NOTED
- USB — DUPLEX RECEPTACLE WITH (2) USB CENTER PORTS +18" OR AS NOTED
- HAND DRYER OUTLET, HEIGHT AS REQUIRED PER ADA
- DROPPED CORD/RECEPTACLE REEL MOUNTED FROM CEILING JUNCTION BOX
- SPECIAL OUTLET AS NOTED, +18" OR AS NOTED
- EQUIPMENT CONNECTION AS NOTED
- SAFETY DISCONNECT SWITCH, SEE EQUIPMENT SCHEDULE
- OC — OCCUPANCY SENSOR, CEILING MOUNTED
- OC — OCCUPANCY SENSOR, WALL MOUNTED. +48" OR AS NOTED
- bS — SINGLE POLE SWITCH, +48" OR AS NOTED LOWERCASE LETTERING DENOTES SWITCH LEG
- bS3 — THREE WAY SWITCH, +48" OR AS NOTED LOWERCASE LETTERING DENOTES SWITCH LEG
- SC — SPEED CONTROL SUPPLIED BY MECH. CONTR., INSTALLED BY ELEC. CONTR. ADJACENT TO OR INSIDE UNIT ENCLOSURE UNLESS OTHERWISE SHOWN
- SUD — UP/DOWN/STOP CONTROL, +48" OR AS NOTED
- DATA OUTLET, +18" OR AS NOTED
- W — WALL TELEPHONE OUTLET, +48" OR AS NOTED
- PUSHBUTTON, +48" OR AS NOTED
- LIGHTING AND POWER PANEL – SURFACE MOUNTED
- PLYWOOD BACKBOARD, SIZE AS NOTED
- EXPOSED CONDUIT
- LV — LOW VOLTAGE WIRING
- CONDUIT CONCEALED IN FLOOR CONSTRUCTION OR UNDERGROUND
- CONDUIT CONCEALED IN CEILING OR WALL CONSTRUCTION
- 1 — KEYED NOTE
- AHU 1 — EQUIPMENT IDENTIFICATION
  EQUIPMENT NUMBER
- 1 E401 — INDICATES DETAIL NUMBER
  INDICATES DRAWING NUMBER WHERE DETAIL IS FOUND
- M — METER

IOWA ONE CALL
1-800-292-8989
CALL - BEFORE - YOU - DIG

GENERAL NOTE:
UNDERGROUND FACILITIES, STRUCTURES, AND UTILITIES HAVE BEEN SHOWN BASED UPON INFORMATION OBTAINED FROM FIELD LOCATIONS BY UTILITY COMPANIES, AVAILABLE SURVEYS AND RECORDS. THEIR LOCATIONS MUST BE CONSIDERED APPROXIMATE ONLY. IT IS ALSO POSSIBLE THAT THERE MAY BE OTHER UNDERGROUND FACILITIES, STRUCTURES, AND UTILITIES IN EXISTENCE THAT ARE NOT SHOWN. IT IS THE RESPONSIBILITY OF EACH INDIVIDUAL PARTY REFERENCING THIS PLAN TO DETERMINE THE EXACT LOCATION AND TYPE OF UNDERGROUND FACILITIES ON THE SITE. HAND EXCAVATE AT CRITICAL POINTS AS NECESSARY TO VERIFY LOCATIONS, SIZES, ELEVATIONS, FLOW LINES, ETC. IF A PROBLEM OR INTERFERENCE EXISTS, NOTIFY ARCHITECT/ENGINEER BEFORE PROCEEDING.

GENERAL NOTES:
1. COORDINATE LOCATION/INSTALLATION OF MECHANICAL AND ELECTRICAL WORK WITH ALL OTHER TRADES. NO ASPECT OF A SYSTEM INSTALLATION OR ITS ROUGH-IN SHALL COMMENCE UNTIL PROPER AND TIMELY COORDINATION WITH ALL TRADES ASSOCIATED WITH THE INSTALLATION HAS TRANSPIRED. ITEMS TO BE COORDINATED SHALL INCLUDE BUT NOT BE LIMITED TO: BUILDING STRUCTURE, SHEET METAL, ALL PIPING SYSTEMS, LIGHT FIXTURES, CONDUITS, CABLE TRAYS, ETC. REFER TO ALL GENERAL, MECHANICAL, AND ELECTRICAL DRAWINGS AND SPECIFICATIONS FOR THIS PROJECT.
2. COORDINATE ALL SITE ELECTRICAL ROUTING WITH LOCAL UTILITIES AND CIVIL DRAWINGS PRIOR TO ROUGH-IN.

KEYED NOTES:
1. CONNECT CIRCUIT TO EMERGENCY PUSHBUTTON ON EXTERIOR WALL OF NEW OFFICE SHOP BUILDING.

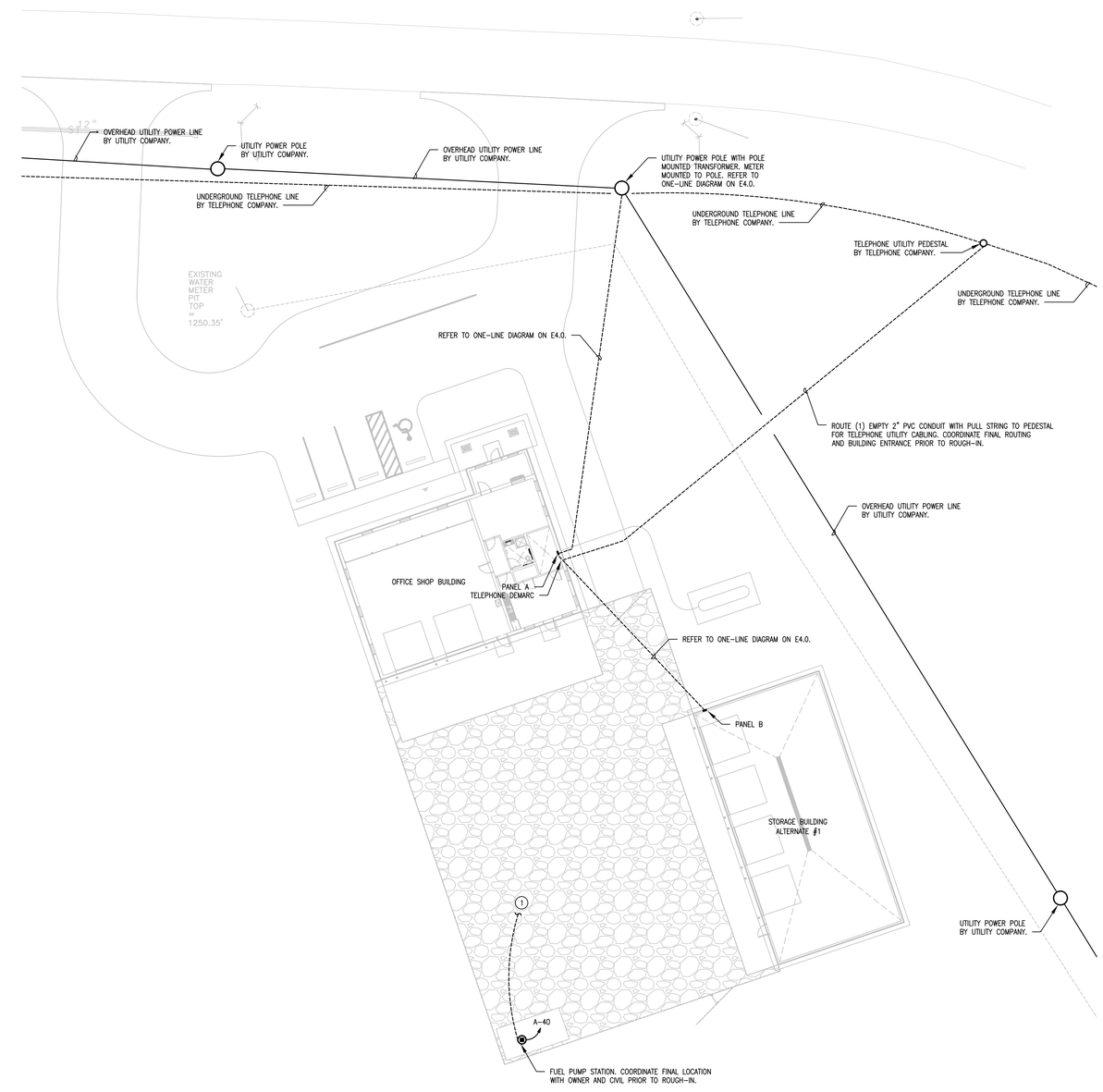

N

SITE PLAN - ELECTRICAL

SCALE: 1" = 20'-0"

CONSULTANT:
KCL ENGINEERING
300 4th St
West Des Moines, IA 50265
515.724.7938
info@kclengineering.com

IOWA DEPARTMENT OF NATURAL RESOURCES
ENGINEERING SERVICES - WALLACE BUILDING
502 E. 9TH ST., DES MOINES, IA 50319-0034
P: 515.725.8200
F: 515.725.8202

ELECTRICAL SYMBOLS, NOTES, AND SITE
NEW OFFICE & STORAGE BUILDING FOR:
VIKING LAKE STATE PARK
STANTON, IA 51573
2780 VIKING LAKE ROAD

NO.	BY / DATE	REVISION

DRAWN BY: JL	PROJECT NUMBER: 17-04-69-02
CHK'D BY: JD	DATE: 10.24.2018
SHEET No: E0.0	

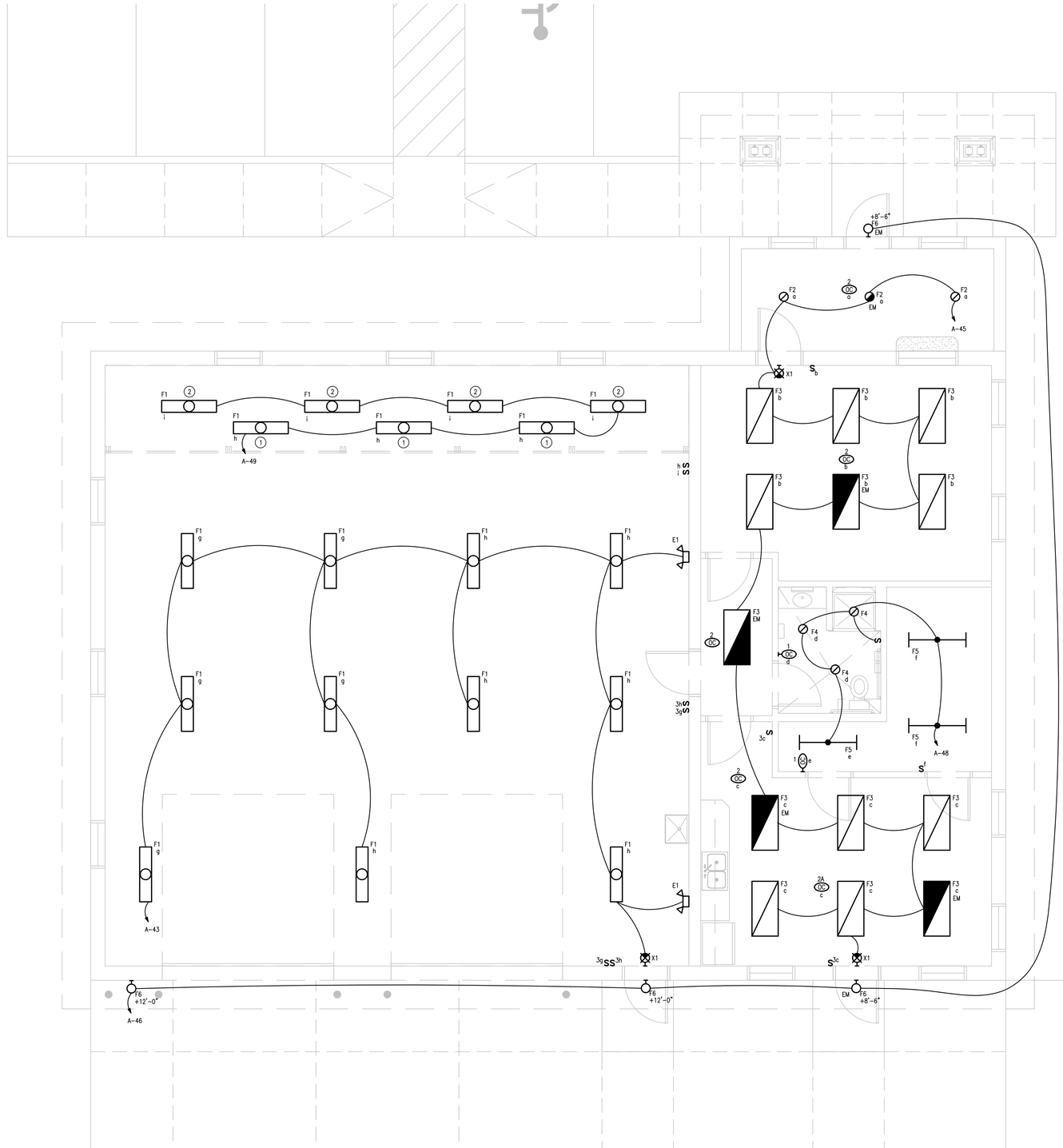

GENERAL NOTES

1. COORDINATE LOCATION/INSTALLATION OF MECHANICAL AND ELECTRICAL WORK WITH ALL OTHER TRADES. NO ASPECT OF A SYSTEM INSTALLATION OR ITS ROUGH-IN SHALL COMMENCE UNTIL PROPER AND TIMELY COORDINATION WITH ALL TRADES ASSOCIATED WITH THE INSTALLATION HAS TRANSPIRED. ITEMS TO BE COORDINATED SHALL INCLUDE BUT NOT BE LIMITED TO: BUILDING STRUCTURE, SHEET METAL, ALL PIPING SYSTEMS, LIGHT FIXTURES, CONDUITS, CABLE TRAYS, ETC. REFER TO ALL GENERAL, MECHANICAL, AND ELECTRICAL DRAWINGS AND SPECIFICATIONS FOR THIS PROJECT.

KEYED NOTES

1. MOUNT ABOVE STORAGE LOFT. COORDINATE FINAL LOCATION WITH OWNER AND ARCHITECTURAL DRAWINGS.
2. MOUNT ON THE UNDERSIDE OF STORAGE LOFT. COORDINATE FINAL LOCATION WITH OWNER AND ARCHITECTURAL DRAWINGS.

N

OFFICE FLOOR PLAN - LIGHTING

SCALE: 1/4" = 1'-0"

CONSULTANT:
KCL ENGINEERING
300 4th St
West Des Moines, IA 50265
515.724.7938
info@kclengineering.com

IOWA DEPARTMENT OF NATURAL RESOURCES
ENGINEERING SERVICES - WALLACE BUILING
502 E. 9TH ST., DES MOINES, IA 50319-0034
P: 515.725.8200
F: 515.725.8202

OFFICE FLOOR PLAN - LIGHTING
NEW OFFICE & STORAGE BUILDING FOR:
VIKING LAKE STATE PARK
2780 VIKING LAKE ROAD
STANTON, IA 51573

NO:	BY / DATE	REVISION

DRAWN BY: JL	PROJECT NUMBER: 17-04-69-02
CHK'D BY: JD	DATE: 10.24.2018
SHEET No: E1.0	

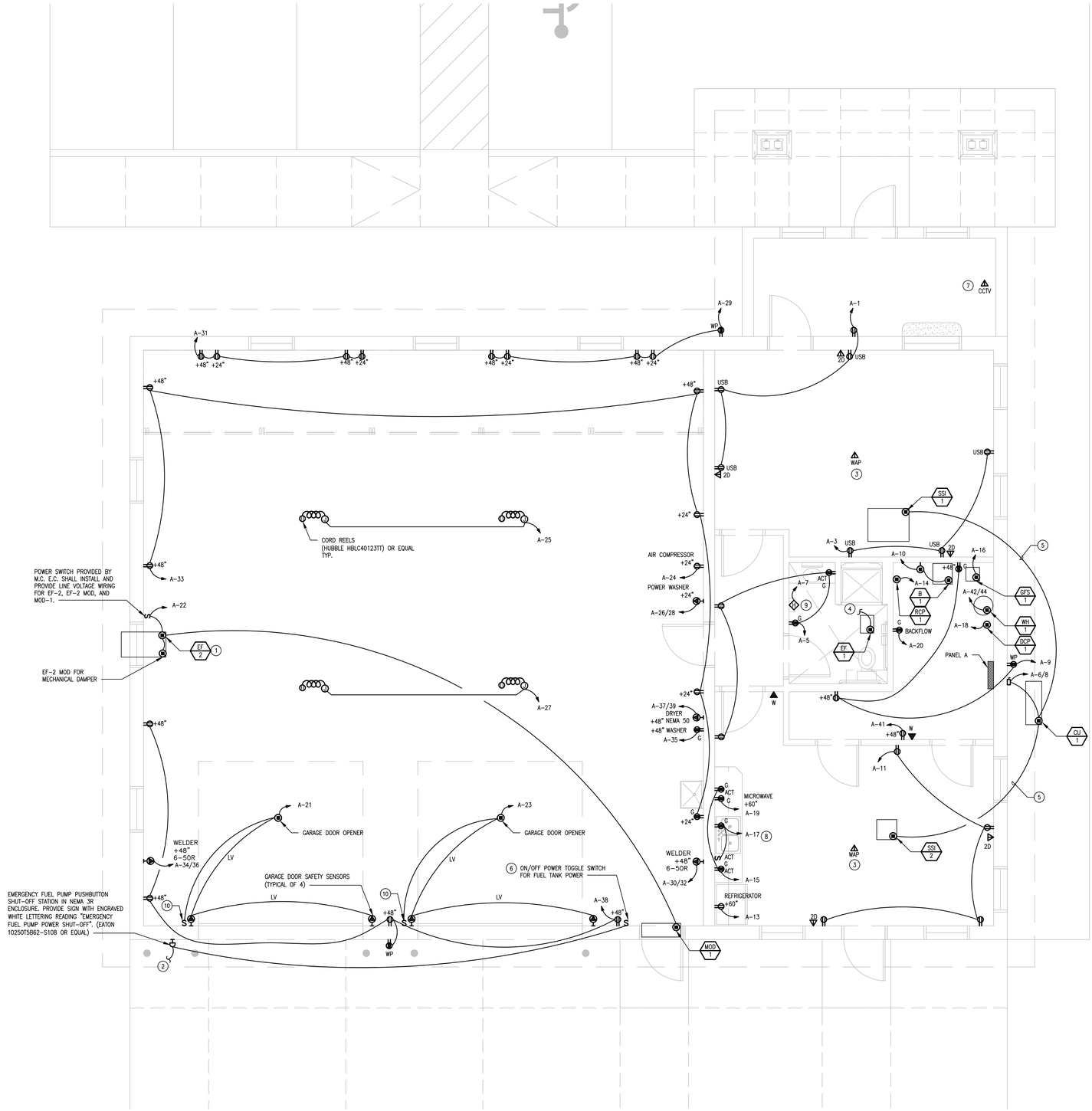

GENERAL NOTES

1. COORDINATE LOCATION/INSTALLATION OF MECHANICAL AND ELECTRICAL WORK WITH ALL OTHER TRADES. NO ASPECT OF A SYSTEM INSTALLATION OR ITS ROUGH-IN SHALL COMMENCE UNTIL PROPER AND TIMELY COORDINATION WITH ALL TRADES ASSOCIATED WITH THE INSTALLATION HAS TRANSPIRED. ITEMS TO BE COORDINATED SHALL INCLUDE BUT NOT BE LIMITED TO: BUILDING STRUCTURE, SHEET METAL, ALL PIPING SYSTEMS, LIGHT FIXTURES, CONDUITS, CABLE TRAYS, ETC. REFER TO ALL GENERAL, MECHANICAL, AND ELECTRICAL DRAWINGS AND SPECIFICATIONS FOR THIS PROJECT.
2. COORDINATE FINAL FURNITURE LAYOUT AND APPLIANCE ELEVATIONS AND LOCATION WITH OWNER AND ARCHITECT PRIOR TO ROUGH-IN.
3. COORDINATE FINAL NEMA PLUG CONFIGURATION WITH OWNER AND OWNER'S PROVIDED EQUIPMENT PRIOR TO FINAL ROUGH-IN WHERE SPECIAL RECEPTACLE IS SHOWN.

KEYED NOTES

1. MECHANICAL EXHAUST FAN WITH DAMPER. COORDINATE WIRING REQUIREMENTS WITH M.C.
2. CONNECT TO FUEL PUMP USING #10 CONDUCTORS IN 3/4" CONDUIT. REFER TO E0.0 FOR PUMP LOCATION.
3. REFER TO DETAIL 3/E3.0.
4. CONNECT CEILING EXHAUST FAN TO ROOM LIGHTING CIRCUIT AND SWITCH.
5. M.C. TO PROVIDE ALL EQUIPMENT AND INTERCONNECTING CONDUCTORS. E.C. TO CONNECT SPLIT SYSTEM UNITS TO CONDENSING UNIT.
6. INSTALL ENGRAVED LABEL WITH TEXT AS FOLLOWS "FUEL TANK POWER SHUT-OFF".
7. INSTALL CEILING MOUNTED CCTV ROUGH-IN FOR FUTURE OWNER PROVIDED EQUIPMENT CONNECTION. COORDINATE FINAL LOCATION WITH OWNER.
8. PROVIDE ABOVE COUNTER ON/OFF TOGGLE POWER SWITCH AND CONNECT TO BELOW COUNTER RECEPTACLE FOR FUTURE USE.
9. COORDINATE FINAL HAND DRYER HEIGHT WITH ARCHITECT AND INSTALL PER ADA HEIGHT REQUIREMENTS AND MANUFACTURER RECOMMENDATIONS.
10. UP/DOWN/STOP CONTROL PROVIDED BY GARAGE DOOR MANUFACTURER INSTALLED BY E.C. COORDINATE FINAL INSTALLATION REQUIREMENTS WITH MANUFACTURER.

N

OFFICE FLOOR PLAN - POWER

SCALE: 1/4" = 1'-0"

CONSULTANT:
KCL ENGINEERING
300 4th St
West Des Moines, IA 50265
515.724.7938
info@kclengineering.com

IOWA DEPARTMENT OF NATURAL RESOURCES
ENGINEERING SERVICES - WALLACE BUILING
502 E. 9TH ST., DES MOINES, IA 50319-0034
P: 515.725.8200
F: 515.725.8202

OFFICE FLOOR PLAN - POWER
NEW OFFICE & STORAGE BUILDING FOR:
VIKING LAKE STATE PARK
2780 VIKING LAKE ROAD
STANTON, IA 51573

NO:	BY / DATE	REVISION

DRAWN BY: JL	PROJECT NUMBER: 17-04-69-02
CHK'D BY: JD	DATE: 10.24.2018
SHEET No: E2.0	

GENERAL NOTES

1. COORDINATE LOCATION/INSTALLATION OF MECHANICAL AND ELECTRICAL WORK WITH ALL OTHER TRADES. NO ASPECT OF A SYSTEM INSTALLATION OR ITS ROUGH-IN SHALL COMMENCE UNTIL PROPER AND TIMELY COORDINATION WITH ALL TRADES ASSOCIATED WITH THE INSTALLATION HAS TRANSPIRED. ITEMS TO BE COORDINATED SHALL INCLUDE BUT NOT BE LIMITED TO: BUILDING STRUCTURE, SHEET METAL, ALL PIPING SYSTEMS, LIGHT FIXTURES, CONDUITS, CABLE TRAYS, ETC. REFER TO ALL GENERAL, MECHANICAL, AND ELECTRICAL DRAWINGS AND SPECIFICATIONS FOR THIS PROJECT.

2. ALL WORK SHOWN ON THIS SHEET SHALL BE UNDER ALTERNATE NUMBER 1.

3. COORDINATE FINAL FURNITURE LAYOUT AND APPLIANCE ELEVATIONS AND LOCATION WITH OWNER AND ARCHITECT PRIOR TO ROUGH-IN.

4. COORDINATE FINAL NEMA PLUG CONFIGURATION WITH OWNER AND OWNER'S PROVIDED EQUIPMENT PRIOR TO FINAL ROUGH-IN WHERE SPECIAL RECEPTACLE IS SHOWN.

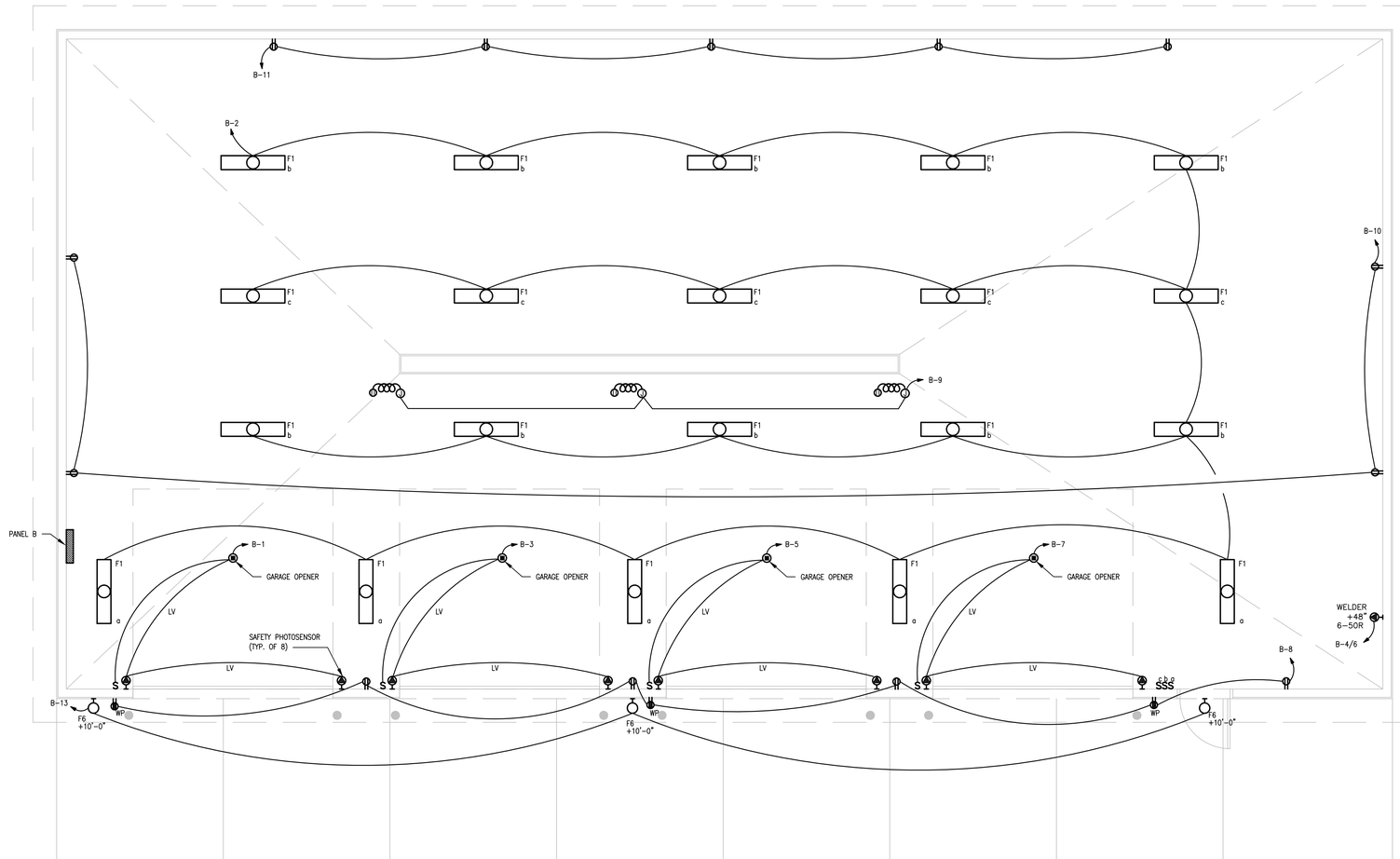

N

STORAGE FLOOR PLAN - ELECTRICAL (ALTERNATE #1)

SCALE: 1/4" = 1'-0"

CONSULTANT:

KCL ENGINEERING
300 4th St
West Des Moines, IA 50265
515.724.7938
info@kclengineering.com

IOWA DEPARTMENT OF NATURAL RESOURCES
ENGINEERING SERVICES - WALLACE BUILING
502 E. 9TH ST., DES MOINES, IA 50319-0034
P: 515.725.8200
F: 515.725.8202

STORAGE FLOOR PLAN - ELECTRICAL

NEW OFFICE & STORAGE BUILDING FOR:
VIKING LAKE STATE PARK

2780 VIKING LAKE ROAD
STANTON, IA 51573

NO:	BY / DATE	REVISION

DRAWN BY: JL
PROJECT NUMBER: 17-04-69-02
CHK'D BY: JD
DATE: 10.24.2018
SHEET No: E3.0

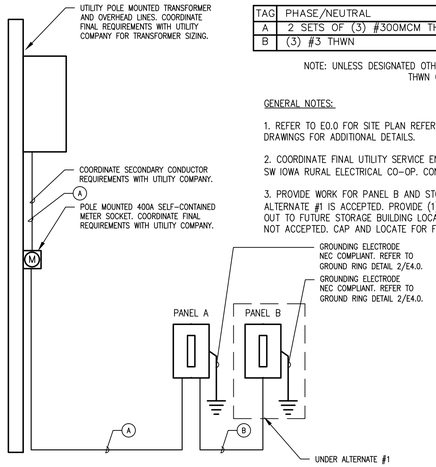

TAG	PHASE/NEUTRAL	GROUND	CONDUIT
A	2 SETS OF (3) #300MCM THWN	–	(2) 3"
B	(3) #3 THWN	#8 THWN	1 1/4"

NOTE: UNLESS DESIGNATED OTHERWISE, CONDUCTORS SHALL BE THWN COPPER

GENERAL NOTES:

1. REFER TO E0.0 FOR SITE PLAN REFERENCE. REFER TO CIVIL DRAWINGS FOR ADDITIONAL DETAILS.

2. COORDINATE FINAL UTILITY SERVICE ENTRANCE REQUIREMENTS WITH SW IOWA RURAL ELECTRICAL CO-OP. CONTACT (888)-220-4869.

3. PROVIDE WORK FOR PANEL B AND STORAGE BUILDING IF ALTERNATE #1 IS ACCEPTED. PROVIDE (1) EMPTY 2" CONDUIT STUB OUT TO FUTURE STORAGE BUILDING LOCATION IF ALTERNATE #1 IS NOT ACCEPTED. CAP AND LOCATE FOR FUTURE USE.

1 ONE-LINE DIAGRAM
NOT TO SCALE

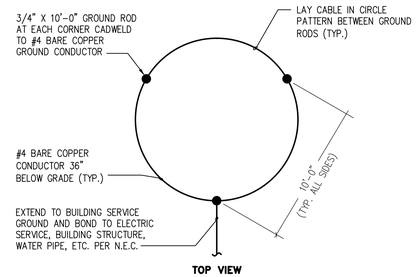

2 NEW BUILDING GROUND RING
NOT TO SCALE

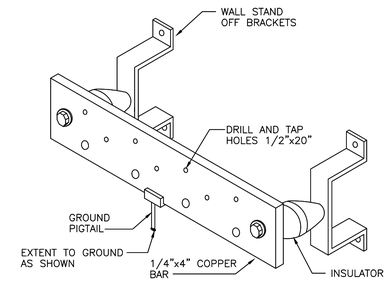

3 GROUND BAR
NOT TO SCALE

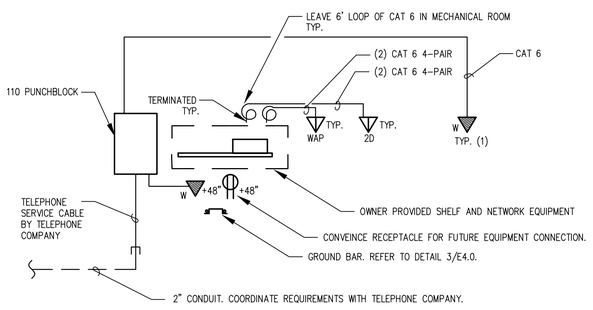

NOTES:
1. ALL CABLES SHALL ADHERE WITH TRANSMISSION STANDARDS IN TIA/EIA-568-B.1.
2. ALL CABLES SHALL BE 100-OHM, FOUR-PAIR UTP, FORMED INTO 25-PAIR, BINDER GROUPS COVERED WITH A BLUE THERMOPLASTIC JACKET.
3. OWNER SHALL PROVIDE AND INSTALL OWN TELECOMMUNICATION EQUIPMENT.

4 VOICE/DATA RISER
NOT TO SCALE

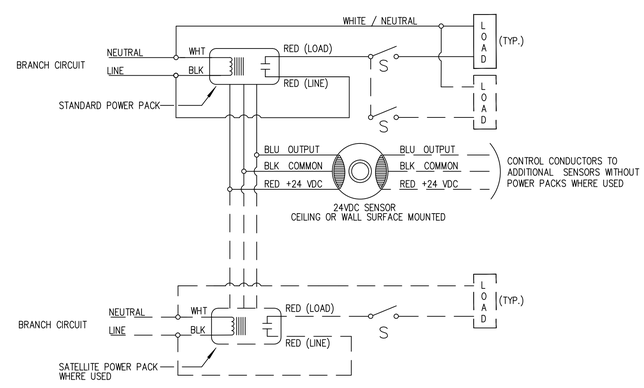

5 MANUAL ON & OCCUPANCY SENSOR LIGHTING CONTROL WIRING – TYPICAL
NOT TO SCALE

LIGHTING CONTROL DEVICE SCHEDULE

TYPE	MANUFACTURER & MODEL NUMBER	MOUNTING	VOLTAGE	DETAILS	APPROVED EQUALS
OC 1	GREENGATE CONTROLS ONW-D-1001-DMV-N-W	WALL	120-277V	500 SQUARE FOOT COVERAGE ULTRASONIC PASSIVE INFRARED WALLBOX OCCUPANCY SENSOR WITH TWO MANUAL ON SWITCHES AND INTEGRAL DAYLIGHTING PHOTOCELL. IMPACT RESISTANT PIR LENS AND HOUSING WITH WHITE FINISH. 120/277 VOLT INPUT POWER. INTEGRAL SELF-ADJUSTING SENSITIVITY MICROPROCESSOR. FIELD CONFIGURE SENSOR FOR MANUAL ON, AUTOMATIC OFF OPERATION. FULL FIVE YEAR WARRANTY FURNISHED BY MANUFACTURER.	WATTSTOPPER LEVITON SCHNEIDER ELECTRIC SENSOR SWITCH HUBBLE AUTOMATION
OC 2 OC 2A	GREENGATE CONTROLS OAC-DT-2000/SP20-MV GREENGATE CONTROLS OAC-DT-2000	CEILING	120-277/ 24VDC	2000 SQUARE FOOT COVERAGE ULTRASONIC AND PASSIVE INFRARED OCCUPANCY SENSOR WITH WHITE FINISH AND 120-277/24 VOLT POWER PACK. INTEGRAL SELF-ADJUSTING SENSITIVITY MICROPROCESSOR. 360° ULTRASONIC COVERAGE AND 360° PASSIVE INFRARED COVERAGE. FULL FIVE YEAR WARRANTY FURNISHED BY MANUFACTURER. WIRE OC-2A TO BE SLAVE TO OC-2 POWER PACK. WIRE UP TO 4 PER POWER PACK.	WATTSTOPPER LEVITON SCHNEIDER ELECTRIC SENSOR SWITCH HUBBLE AUTOMATION

1. SENSOR EQUIPMENT MANUFACTURERS SHALL PROVIDE FACTORY AUTHORIZED REPRESENTATIVE TO DEMONSTRATE TYPICAL INSTALLATION AND COMMISSIONING OF EQUIPMENT TO INSTALLING CONTRACTOR DURING PROJECT CONSTRUCTION.

2. OCCUPANCY SENSOR TIME-OFF SETTINGS SHALL BE 20 MINUTES MINIMUM AND 30 MINUTES MAXIMUM.

CONSULTANT:
KCL ENGINEERING
300 4th St
West Des Moines, IA 50265
515.724.7938
info@kclengineering.com

IOWA DEPARTMENT OF NATURAL RESOURCES
ENGINEERING SERVICES - WALLACE BUILING
502 E. 9TH ST., DES MOINES, IA 50319-0034
P: 515.725.8200
F: 515.725.8202

ELECTRICAL DETAILS
NEW OFFICE & STORAGE BUILDING FOR:
VIKING LAKE STATE PARK
2780 VIKING LAKE ROAD
STANTON, IA 51573

NO.	BY / DATE	REVISION

DRAWN BY: JL
PROJECT NUMBER: 17-04-69-02
CHK'D BY: JD
DATE: 10.24.2018
SHEET No: E4.0

LUMINAIRE SCHEDULE

TYPE	MANUFACTURER	MODEL NUMBER	DESCRIPTION	DIMENSIONS	LAMP TYPE	LAMP QUANTITY	BALLAST	FIXTURE LOAD	FIXTURE VOLTS	APPROVED EQUALS
F1	WILLIAMS	96-4-L62-840-73-PCFR-WET/2	INDUSTRIAL LINEAR LED SURFACE MOUNT FIXTURE. MINIMUM 6,200 LUMENS AT 5,000K CCT AND >80 CRI. ALUMINUM HOUSING WITH CURVED POLYCARBONATE COVER AND WHITE REFLECTOR. WET LOCATION LISTED.	47"X7"X4"	NOMINAL 4,000K CCT LEDS AS PROVIDED BY MANUFACTURER	AS PROVIDED BY MANUFACTURER	AS PROVIDED BY MANUFACTURER	73	120	EATON, LITHONIA, OR AS APPROVED BY ENGINEER
F2	JUNO INDY	L6-23-40-U-G2 L600HW-C-Q-WH	HYPERBOLIC SHAPE LED DOWNLIGHT. ALUMINUM HEAT SINK INCOOPORATED WITH HOUSING. DELIVERING MINIMUM 2,300 LUMENS AT MINIMUM OF 80 CRI AT 4,000K CCT. SUITABLE FOR INSTALLATION IN CEILINGS WITH THICKNESS OF UP TO 2"	4" X 6"	NOMINAL 4000°K 80 CRI LEDS AS PROVIDED BY MANUFACTURER	AS PROVIDED BY MANUFACTURER	AS PROVIDED BY MANUFACTURER	29	120	CREEK KR SERIES, OR AS APPROVED BY ENGINEER
F3	CREE	ZR24C-40k-10V-FD-(EM14)	RECESSED LED 2X4 TROFFER - 4,000 LUMENS WITH 80 CRI. PROVIDE EMERGENCY BATTERY BACKUP WHERE INDICATED ON PLANS WITH "EM".	2'X4'	NOMINAL 4000°K 80 CRI LEDS AS PROVIDED BY MANUFACTURER	AS PROVIDED BY MANUFACTURER	AS PROVIDED BY MANUFACTURER	32	120	WILLIAMS, COLUMBIA, OR AS APPROVED BY ENGINEER
F4	GOTHAM	EVO-40/25-6-DFR-120-EZ1	LED WET LISTED SHOWER RECESSED DOWNLIGHT. MINIMUM 2,500 LUMENS. REGRESSED IMPACT RESISTANT ACRYLIC LENS.	6" DIAMETER	LED / 4,000K CCT	AS PROVIDED BY MANUFACTURER	AS PROVIDED BY MANUFACTURER	10	120	PRESCOLITE, LITHONIA, OR AS APPROVED BY ENGINEER
F5	HE WILLIAMS	75L-4-LED*PH20/840-A12125-VBY-2-EDD*PH-UNV	LED LENSED STRIP FIXTURE. 22-GAUGE DIE-FORMED C.R.S. HOUSING. ALL PARTS PAINTED AFTER FABRICATION. ACRYLIC #12 LENS. SUSPENDED MOUNT. PROVIDE WITH (2) Y HANGERS AND (2) 2' CHAINS. COORDINATE MOUNTING LOCATION AND HEIGHT WITH OWNER. MINIMUM 2000 LUMENS AND AT LEAST 80 CRI AT 4,000K CCT.	4' X 1'	NOMINAL 4000°K 80 CRI LEDS AS PROVIDED BY MANUFACTURER	AS PROVIDED BY MANUFACTURER	AS PROVIDED BY MANUFACTURER	24	120	EATON, LITHONIA, OR AS APPROVED BY ENGINEEF
F6	PHILIPS GARDCO	121-MRM-WT-35LA-350-NW-UNV-BLP-PCB-MHS	EXTERIOR WALL MOUNT CUT-OFF LED LUMINAIRE. DIE-CAST ALUMINUM HOUSING WITH TEMPERED GLASS LENS ASSEMBLY AND STAINLESS STEEL FASTENERS. CLEAR SPECULAR ANODIZED ALUMINUM REFLECTOR. BRONZE POLYESTER POWDER COAT FINISH. UL LISTED FOR WET LOCATION. INTEGRAL PASSIVE INFRARED MOTION SENSOR CABABLE OF DETECTION MOTION WITHIN 24 FEET. MOTION SENSOR REDUCES SYSTEM WATTAGE TO 25% OF FULL OUTPUT WHEN NO MOTION IS DETECTED FOR 5 MINUTES. INTEGRAL PHOTOCELL.	15.5" X 9.25" X 5.5"	NOMINAL 4000°K 75 CRI LEDS AS PROVIDED BY MANUFACTURER	AS PROVIDED BY MANUFACTURER	AS PROVIDED BY MANUFACTURER	35	120	LITHONIA WSQ SERIES, LSI XPWS3 SERIES, CREE XSP, OR AS APPROVED BY ENGINEER
E1	BEGHELLI	EL-212L-SE-UNV	WALL MOUNTED EMERGENCY LIGHT. POLYCARBONATE HOUSING WITH CLEAR UV STABILIZED POLYCARBONATE LENS SEALED TO HOUSING. TWO ADJUSTABLE LAMPHOLDERS WITH 12 WATT HALOGEN WEDGE BASE LAMPS CAN BE AIMED AND LOCKED IN PLACE. ADDITIONAL BATTERY CAPACITY. COMPONENT SELF-DIAGNOSTIC AND LIFE SAFETY CODE COMPLIANCE MICROPROCESSOR WITH LED TEST RESULTS DISPLAY. HOUSING WITH LIGHT GRAY FINISH. COORDINATE FINAL AIMING WITH OWNER AND ENGINEER.	-	12V/12W HALOGEN INCLUDED	2	AS PROVIDED BY MANUFACTURER	5	120	LIGHTALAMRS, DUAL-LITE, OR AS APPROVED BY ENGINEER
X1	BARRON	GVEX-U-BP-WB-WH	SELF-POWERED LED UNIVERSAL EXIT SIGN WITH WHITE THERMOPLASTIC HOUSING AND STENCIL LETTERING PANELS. CANOPY AND MOUNTING HARDWARE INCLUDED FOR WALL, CEILING OR END MOUNTING APPLICATIONS. SNAP OUT DIRECTIONAL CHEVRONS. FOR BOTH SINGLE AND DUAL FACE APPLICATIONS. BATTERY BACKUP WITH REMOTE CAPABILITY. PROVIDE WIRE GUARD WHERE INDICATED ON PLANS.	-	GREEN LEDS INCLUDED	AS PROVIDED BY MANUFACTURER	AS PROVIDED BY MANUFACTURER	2	120	LIGHTALAMRS, DUAL-LITE, OR AS APPROVED BY ENGINEER

GENERAL NOTES:

1. VERIFY COMPATIBILITY OF LIGHT FIXTURES WITH CEILING MATERIAL, ADJACENT CONSTRUCTION, AND ADJACENT FINISHES PRIOR TO SHOP DRAWINGS SUBMITTAL AND NOTIFY THE ENGINEER OF ANY CONFLICTS WITH THE PROPOSED INSTALLATION.
2. CONTRACTOR IS RESPONSIBLE FOR ALL MISCELLANEOUS HARDWARE NECESSARY TO INSTALL AND SUPPORT THE LUMINAIRES.
3. ADJUSTABLE INTERIOR AND EXTERIOR LIGHT FIXTURES SHALL BE TARGETED AND ADJUSTED BY THE CONTRACTOR UNDER THE OBSERVATION AND IN COMPLIANCE WITH RECOMMENDATIONS OF THE OWNER. ALL LABOR AND MATERIAL COSTS MADE NECESSARY BY THIS REQUIREMENT SHALL BE INCLUDED.

EQUIPMENT SCHEDULE

TAG	ELECTRICAL CHARACTERISTICS VOLT/PHASE	MOTOR HP	KW	MCA	DISCONNECT TYPE	SIZE (AMPS)	NEMA RATING	FUSE (AMPS)	REMARKS
EF-1	120 / 1	-	0.1	-	CP	20	1	-	Connect to lighting circuit
EF-2, EF-2 MOD, MOD-1	120 / 1	1/2	-	-	HOA	20	1	-	HOA switch provided by MC
B-1	120 / 1	-	-	15	CP	-	-	-	Cord provided with unit
WH-1	240 / 1	-	4.5	-	CB	-	-	-	-
DCP	120 / 1	1/8	-	-	CB	-	-	-	Time switch provided by MC installed by EC
RCP	120 / 1	1/8	-	-	CB	-	-	-	-
CUH-1	240 / 1	-	4	-	INT	-	-	-	-
SSI-1/2	240 / 1	-	-	1	-	-	-	-	Interconnected with CU-1
CU-1	240 / 1	-	-	18	DS	30	3R	-	-

ABBREVIATIONS:

CB	CIRCUIT BREAKER IN PANELBOARD
CP	CORD AND PLUG
DS	NON-FUSED DISCONNECT SWITCH
INT	INTEGRAL WITH EQUIPMENT FROM FACTORY
HOA	HAND OFF AUTO SWITCH

PANEL A

IDNR - VIKING LAKE

LOAD DESCRIPTION	LOAD (VA)	TY	BRKR AMP	BRKR P	CKT NO	PHASE A	PHASE B	CKT NO	BRKR AMP	BRKR P	TY	LOAD (VA)	LOAD DESCRIPTION
RECEPTACLES	720	R	20	1	1	8295		2	**100	2	R	15150	PANEL B
RECEPTACLES	540	R	20	1	3		8115	4					-
RECEPTACLES	720	R	20	1	5	2870		6	30	2	M	4300	CU
HAND DRYER	1200	R	20	1	7		3350	8					-
RECEPTACLES	540	R	*20	1	9	720		10	20	1	M	180	BOILER
RECEPTACLES	720	R	20	1	11		720	12	20	1			SPARE
REFRIGERATOR	1200	A	*20	1	13	1700		14	20	1	M	500	RCP
RECEPTACLES	360	R	20	1	15		860	16	20	1	M	500	GFS
GARBAGE DISPOSAL	1000	A	20	1	17	1500		18	20	1	M	500	DCP
MICROWAVE	1500	A	20	1	19		1680	20	*20	1	R	180	BACKFLOW RECEPTACLE
GARAGE DOOR	900	M	*20	1	21	2000		22	20	1	M	1100	EF-2
GARAGE DOOR	900	M	*20	1	23		2100	24	*20	1	A	1200	AIR COMPRESSOR
CORD REELS	720	R	*20	1	25	1620		26	*20	2	A	1800	POWER WASHER
CORD REELS	720	R	*20	1	27		1620	28					-
RECEPTACLES	900	R	*20	1	29	4150		30	*50	2		6500	WELDER
RECEPTACLES	720	R	*20	1	31		3970	32					-
RECEPTACLES	1080	R	*20	1	33	4330		34	*50	2		6500	WELDER
WASHER	1200	A	*20	1	35		4450	36					-
DRYER	5000	A	*50	2	37	3400		38	*20	1	R	900	RECEPTACLES
-					39		4000	40	20	1	M	1500	FUEL PUMP
IT EQUIPMENT	180	R	*20	1	41	2430		42	30	2	R	4500	WATER HEATER
LIGHTING	715	L	20	1	43		2965	44					-
LIGHTING	506	L	20	1	45	656		46	20	1	L	150	LIGHTING
LIGHTING	455	L	20	1	47		605	48	20	1	L	150	LIGHTING
SPARE			20	1	49			50	20	1			SPARE
SPARE			20	1	51			52	20	1			SPARE
SPARE			20	1	53			54	20	1			SPARE
SPARE			20	1	55			56	20	1			SPARE
SPARE			20	1	57			58	20	1			SPARE
SPARE			20	1	59			60	20	1			SPARE
SPACE					61			62					SPACE
SPACE					63			64					SPACE
SPACE					65			66					SPACE
SPACE					67			68					SPACE
SPACE					69			70					SPACE
SPACE					71			72					SPACE

*INDICATES GFCI BREAKER

VOLTS-PHASE-WIRE	120/240V-1PHASE-3W		
BUS RATING	400A		
MAIN BREAKER RATING	400A		
MOUNTED	SURFACE		
DEMAND LIGHTING	1.98	KVA @ 100%	1.98
DEMAND RCPT. 10KVA @ 100%+	29.85	KVA @ 50%	19.93
DEMAND MOTOR	10.38	KVA @ 100%	10.38
DEMAND APPLIANCES	12.90	KVA @ 100%	12.90
OTHER		KVA @ %	
SCCR RATING	25000	A	
TOT. DEMAND (KVA)	45.18		
TOT. DEMAND (AMPS)	188.25		
TOT. CONNECTED LOAD (KVA)	68.11		
TOT. CONNECTED LOAD (AMPS)	283.78		
TOT. CONNECTED AMPS * 1.25	354.72	AMPS	

TOTAL LOAD BY PHASE	(KVA)
A PHASE CONNECTED LOAD	33.67
B PHASE CONNECTED LOAD	34.44
C PHASE CONNECTED LOAD	

DEMAND LOAD SUMMARY	TOTAL KVA
LIGHTING	1.98
RECEPT.	19.93
MOTOR	10.38
APPLIANCE	12.90
OTHER	

PANEL A

PANEL B

IDNR - VIKING LAKE

LOAD DESCRIPTION	LOAD (VA)	TY	BRKR AMP	BRKR P	CKT NO	PHASE A	PHASE B	CKT NO	BRKR AMP	BRKR P	TY	LOAD (VA)	LOAD DESCRIPTION
GARAGE DOOR	900	M	*20	1	1	2200		2	20	1	L	1300	LIGHTING
GARAGE DOOR	900	M	*20	1	3		4150	4	*50	2	R	6500	WELDER
GARAGE DOOR	900	M	*20	1	5	4150		6					-
GARAGE DOOR	900	M	*20	1	7		1980	8	*20	1	R	1080	RECEPTACLES
CORD REELS	900	R	*20	1	9	1620		10	*20	1	R	720	RECEPTACLES
RECEPTACLES	900	R	*20	1	11		900	12	20	1			SPARE
EXTERIOR LIGHTING	150	L	20	1	13	150		14	20	1			SPARE
SPARE			20	1	15			16	20	1			SPARE
SPARE			20	1	17			18	20	1			SPARE

*INDICATES GFCI BREAKER

VOLTS-PHASE-WIRE	120/240V-1PHASE-3W		
BUS RATING	100A		
MAIN BREAKER RATING	100A		
MOUNTED	SURFACE		
DEMAND LIGHTING	1.45	KVA @ 100%	1.45
DEMAND RCPT. 10KVA @ 100%+	10.10	KVA @ 50%	10.05
DEMAND MOTOR	3.60	KVA @ 100%	3.60
DEMAND APPLIANCES		KVA @ 100%	
OTHER		KVA @ %	
SCCR RATING	10000	A	
TOT. DEMAND (KVA)	15.10		
TOT. DEMAND (AMPS)	62.92		
TOT. CONNECTED LOAD (KVA)	15.15		
TOT. CONNECTED LOAD (AMPS)	63.13		
TOT. CONNECTED AMPS * 1.25	78.91	AMPS	

TOTAL LOAD BY PHASE	(KVA)
A PHASE CONNECTED LOAD	8.12
B PHASE CONNECTED LOAD	7.03

DEMAND LOAD SUMMARY	TOTAL KVA
LIGHTING	1.45
RECEPT.	10.05
MOTOR	3.60
APPLIANCE	
OTHER	

PANEL B

CONSULTANT:
KCL ENGINEERING
300 4th St
West Des Moines, IA 50265
515.724.7938
info@kclengineering.com

IOWA DEPARTMENT OF NATURAL RESOURCES
ENGINEERING SERVICES - WALLACE BUILING
502 E. 9TH ST., DES MOINES, IA 50319-0034
P: 515.725.8200
F: 515.725.8202

ELECTRICAL SCHEDULES
NEW OFFICE & STORAGE BUILDING FOR:
VIKING LAKE STATE PARK
2780 VIKING LAKE ROAD
STANTON, IA 51573

NO.	BY / DATE	REVISION

DRAWN BY: JL
PROJECT NUMBER: 17-04-69-02
CHK'D BY: JD
DATE: 10.24.2018
SHEET No: E5.0