IOWA DEPARTMENT OF NATURAL RESOURCES

CONSTRUCTION DOCUMENTS FOR ELK ROCK STATE PARK FISH CLEANING STATION

MARION COUNTY, IOWA

PROJECT # 15-05-63-01

LICENSED PROFESSIONAL ENGINEER
SHAHID HAMEED
16633
ENVIRONMENTAL
IOWA

I hereby certify that this engineering document was prepared by me or under my direct personal supervision and that I am a duly licensed Professional Engineer under the laws of the State of Iowa.

Shahid Hameed Date

My license renewal date is December 31, 2016.

Pages or sheets covered by this seal: ALL

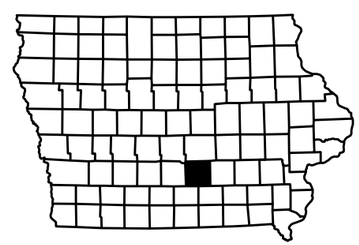

IOWA ONE CALL
1-800-292-8989
www.iowaonecall.com
811 Know what's below. Call before you dig.

DIRECTORY

PROJECT MANAGER		CONSTRUCTION INSPECTOR	
COMPANY	IOWA DEPARTMENT OF NATURAL RESOURCES	COMPANY	IOWA DEPARTMENT OF NATURAL RESOURCES
ADDRESS	502 EAST 9TH STREET	ADDRESS	
CITY,STATE,ZIP	DES MOINES, IA, 50319	CITY,STATE,ZIP	
CONTACT	TROY DUFF	CONTACT	JASON KRUSE
TELEPHONE	515-250-3715	TELEPHONE	515-250-3707
FAX	515-725-8458	FAX	
EMAIL	troy.duff@dnr.iowa.gov	EMAIL	jason.kruse@dnr.iowa.gov

PROJECT DESCRIPTION

THIS PROJECT CONSISTS OF CONSTRUCTION OF A PCC PAD, SIDEWALK, PCC HANDICAP ACCESSIBLE PARKING, A SHELTER, AND FISH CLEANING TABLE WITH NECESSARY UTILITIES

AUTHORIZATION TO BID

AUTHORIZATION - PARKS | WILDLIFE | FISHERIES | LAW ENFORCEMENT | FORESTRY DATE

ENGINEERING BUREAU CHIEF DATE

SHEET INDEX

A.01	COVER SHEET
A.02	LOCATION MAP
B.01	LIFT STATION DETAILS
B.02	MISC DETAILS
B.03	SHELTER DETAILS
C.01	QUANTITIES AND GENERAL INFORMATION
D.01	OVERALL SITE PLAN
D.02	SHELTER AREA SITE PLAN

CONSULTANT:

IOWA DEPARTMENT OF NATURAL RESOURCES
ENGINEERING SERVICES - WALLACE BUILDING
502 E. 9TH ST., DES MOINES, IA 50319-0034

COVER SHEET

FISH CLEANING STATION FOR:
ELK ROCK STATE PARK
MARION COUNTY

NO.	BY / DATE	REVISION

DRAWN BY: PROJECT NUMBER: 15-05-63-01
CHK'D BY: DATE:
SHEET No: A.01

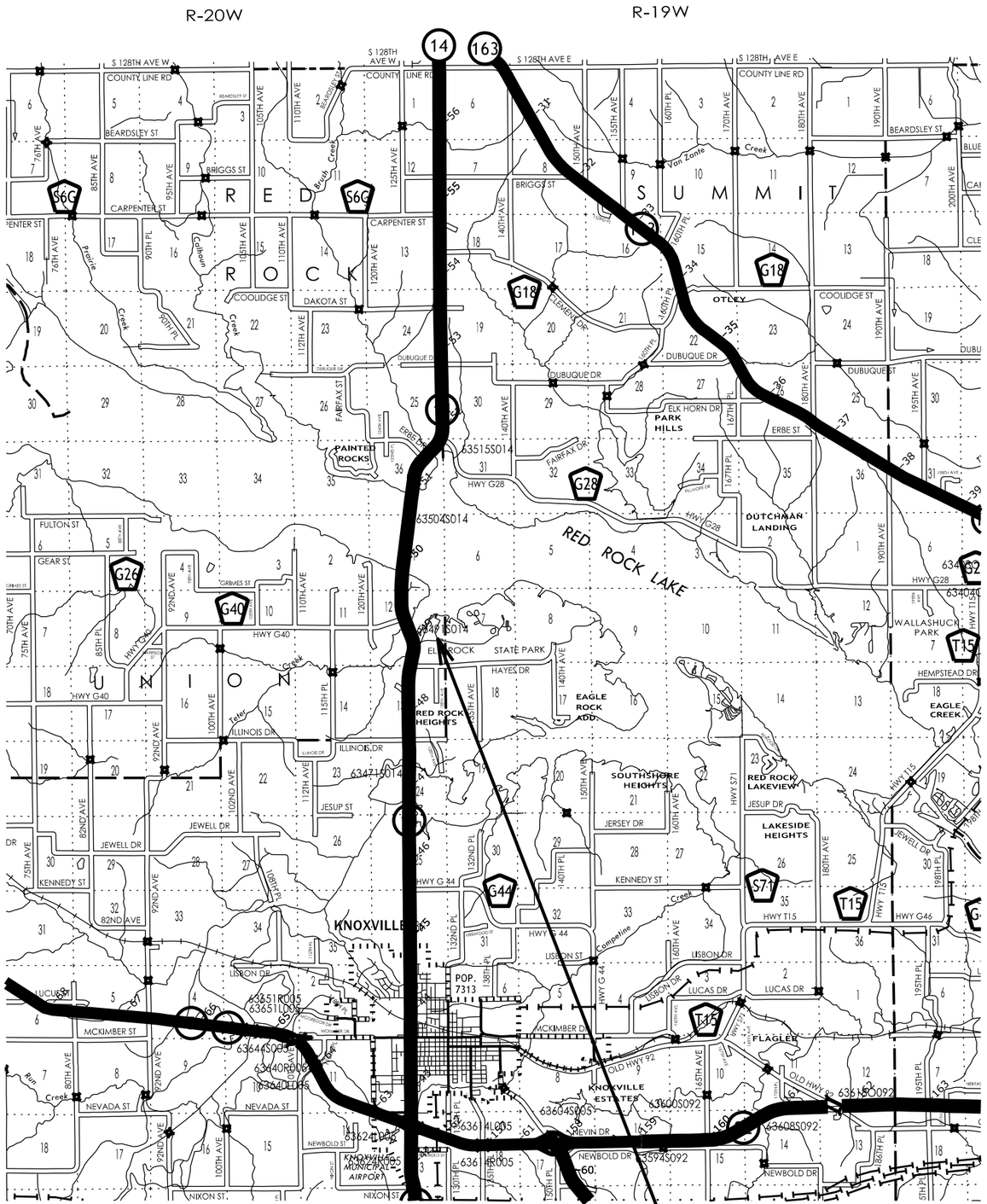

Elk Rock State Park

RED ROCK RESERVOIR

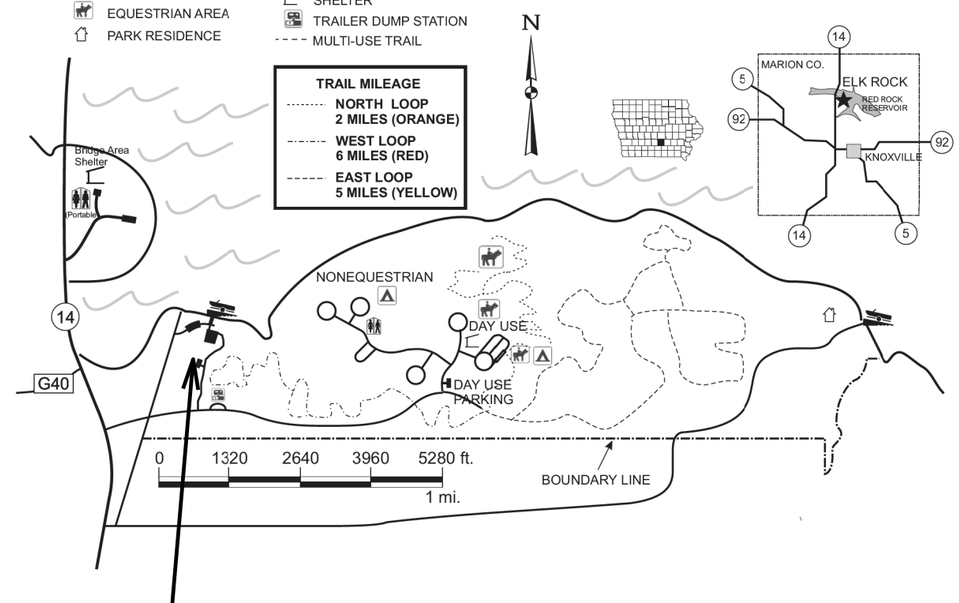

CONSULTANT:

IOWA DEPARTMENT OF NATURAL RESOURCES

ENGINEERING SERVICES - WALLACE BUILDING
502 E. 9TH ST., DES MOINES, IA 50319-0034

PROJECT LOCATION MAP

FISH CLEANING STATION FOR:

ELK ROCK STATE PARK

MARION COUNTY

NO.	BY / DATE	REVISION

DRAWN BY:

PROJECT NUMBER: 15-05-63-01

CHK'D BY:

DATE:

SHEET No: **A.02**

PARTS LIST

ITEM NO.	PART NUMBER	DESCRIPTION	QTY.
1	FB42X108F-212943	42" FIBERGLASS BASIN W/ FIBERGLASS ANTI-FLOAT	1
2	C42HSS-FM-212943	1/4" X 46" O.D. STEEL FROGMOUTH HATCH COVER	1
3	C200S	2" STAINLESS STEEL THREADED NPT COUPLING	2
4	SSFB4	STAINLESS STEEL FLOAT BRACKET W/(4) CORD GRIPS	1
6	BERS-0200	BASE ELBOW, PULL-OUT FLANGE, 2" SS PUMP ADAPTER	2
7	14-0105	2" SCH80 PVC PIPE	20'
8	14-0218	2" SCH80 PVC 90 DEG. ELBOW	2
9	14-0316	2" SCH80 PVC TEE	2
10	14-1357	2" PVC BALL CHECK VALVE	2
11	14-1507	2" SCH80 PVC GATE VALVE	2
12	SSVH200-04-212943	304 SS VALVE EXTENSION HANDLE- 4FT FOR 2" SYSTEM	4
13	14-8101-10	ALUMINUM SHIPPING BRACING FOR 42" BASIN	1
14	UGBALUM42_9	ALUMINUM UPPER GUIDERAIL BRACING FOR 42" BASIN	1
15	UGB-STNLS	SS UPPER GUIDERAIL BRACKET FOR RAILS (3/4",1"&1-1/4")	2
16	13-0102	1" 304 STAINLESS STEEL PIPE	40'
17	PF200T	2" PLASTIC THREADED FLANGE	1
18		2" TEE AND BALL VALVE	2

ITEMS TO BE SHIPPED LOOSE

ITEM NO.	PART NUMBER	DESCRIPTION	QTY.
40	GV200	----------	1
41	H403FG3672	4" FG HUB FOR 36" TO 72" BASINS	2
42	CHNSS10	3/16" X 10' 316 SS CHAIN W/2 SHACKLES	2

WETWELL
O.D. = 46"
B.C. = 44 1/2"
I.D. = 42"

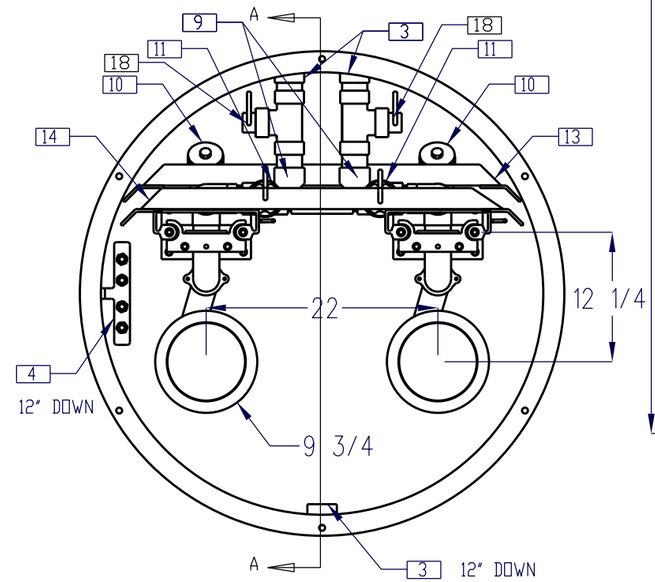

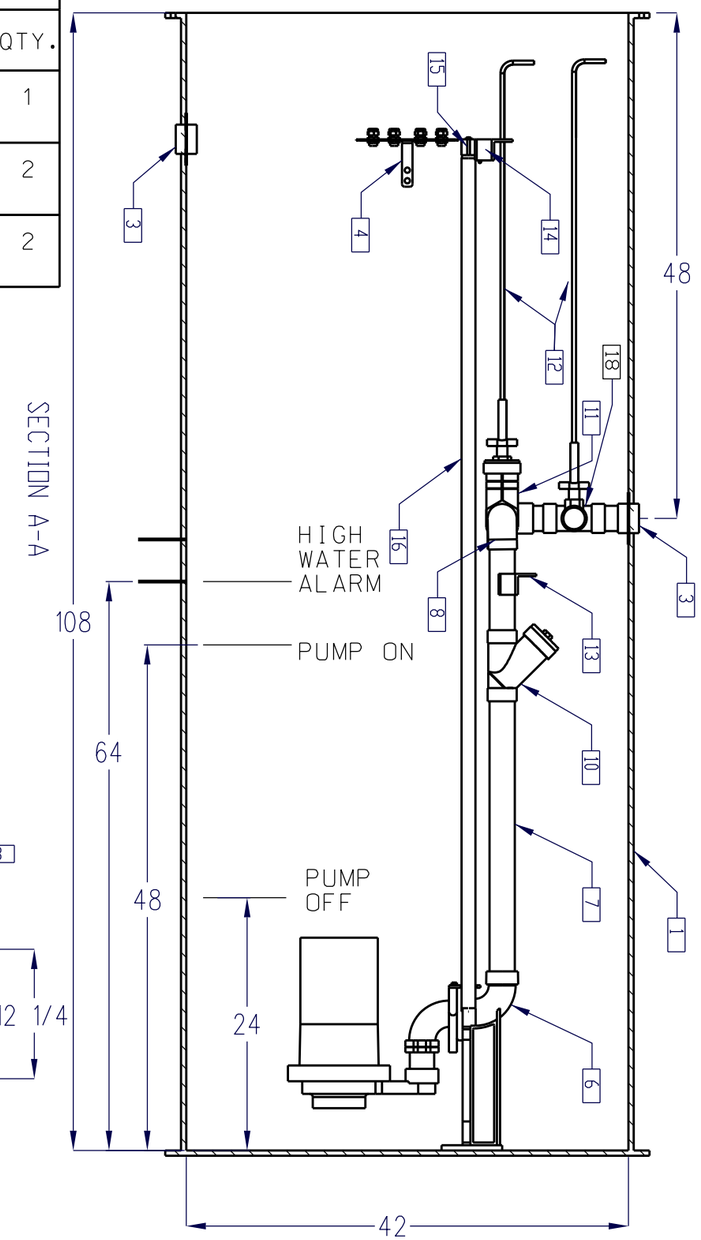

CONSULTANT:

IOWA DEPARTMENT OF NATURAL RESOURCES

ENGINEERING SERVICES - WALLACE BUILDING
502 E. 9TH ST., DES MOINES, IA 50319-0034

LIFT STATION DETAILS

FISH CLEANING STATION FOR:
ELK ROCK STATE PARK
MARION COUNTY

NO.	BY / DATE	REVISION

DRAWN BY:
PROJECT NUMBER: 15-05-63-01
CHK'D BY:
DATE:
SHEET No: **B.01**

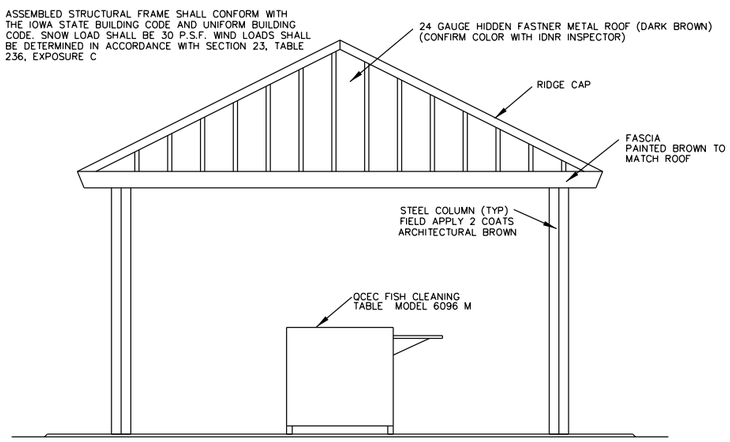

EAST SHELTER ELEVATION

NO SCALE

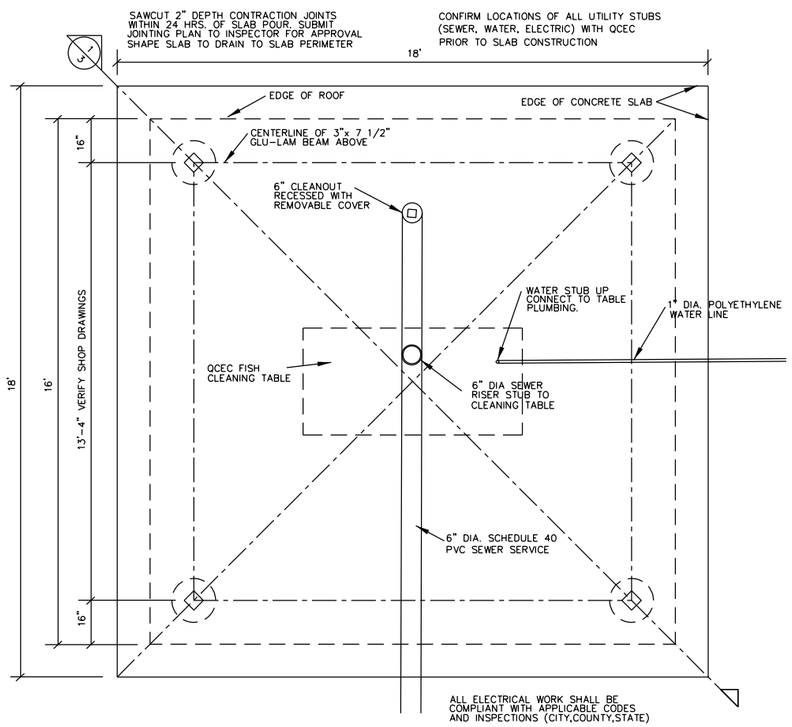

SHELTER FLOOR PLAN

NO SCALE

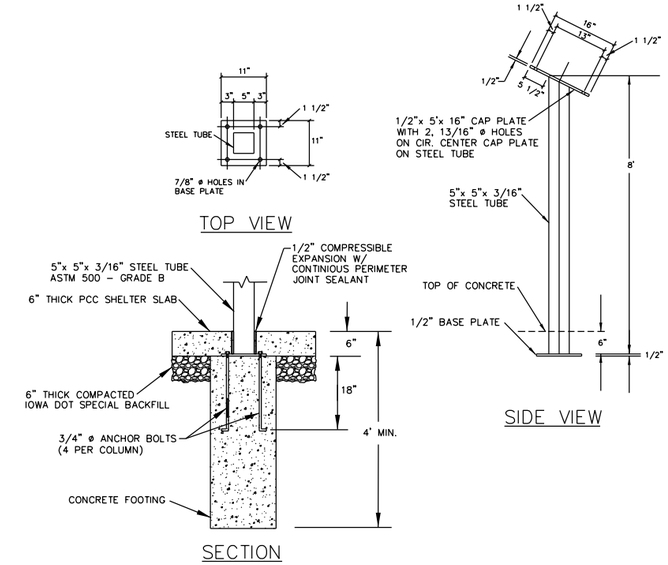

STEEL COLUMN TYPICAL

NO SCALE

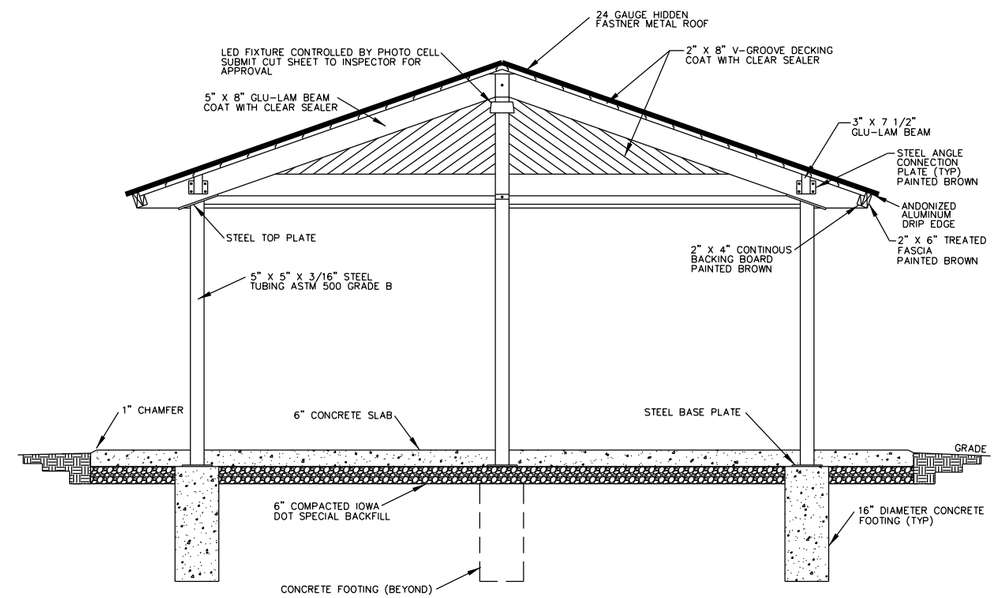

1/3 SHELTER SECTION

NO SCALE

CONSULTANT:

IOWA DEPARTMENT OF NATURAL RESOURCES

ENGINEERING SERVICES - WALLACE BUILDING
502 E. 9TH ST., DES MOINES, IA 50319-0034

SHELTER DETAILS

FISH CLEANING STATION FOR:

ELK ROCK STATE PARK

MARION COUNTY

NO.	BY / DATE	REVISION

DRAWN BY:

PROJECT NUMBER: 15-05-63-01

CHK'D BY:

DATE:

SHEET No:

B.02

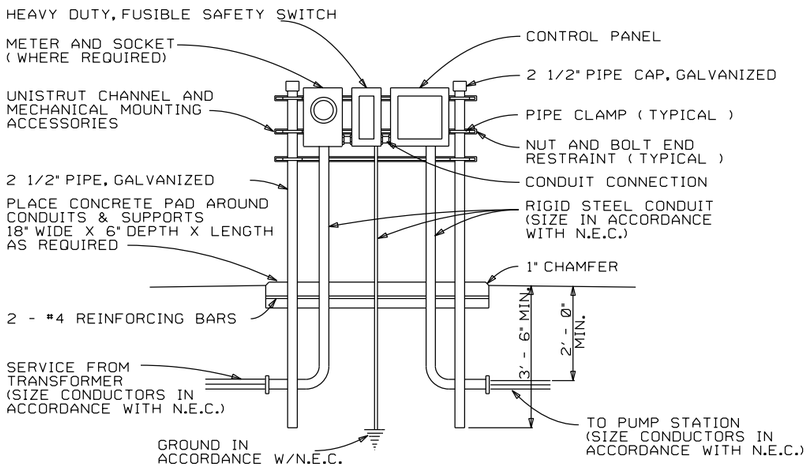

STANDARD PUMP STATION CONTROL PEDESTAL

NOT TO SCALE

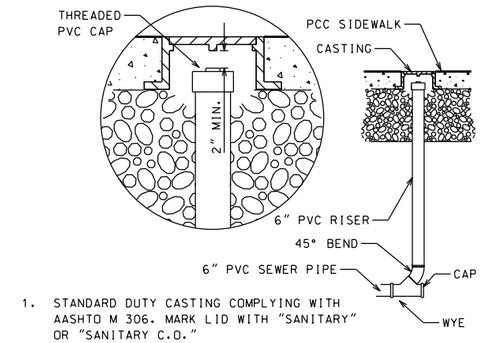

1. STANDARD DUTY CASTING COMPLYING WITH AASHTO M 306. MARK LID WITH "SANITARY" OR "SANITARY C.O."
2. DO NOT ALLOW CASTING TO BEAR ON TOP OF RISER PIPE.

CLEAN OUT DETAIL

NO SCALE

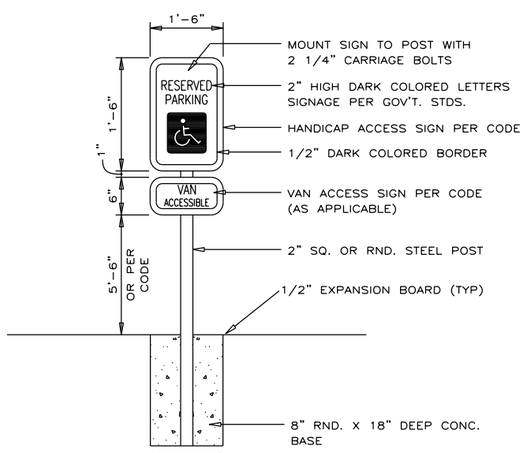

ADA SIGN DETAIL

NO SCALE

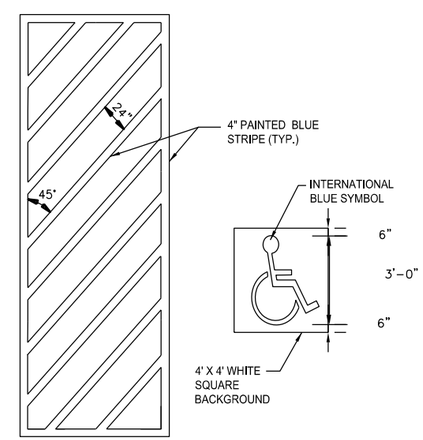

ADA PAVEMENT MARKINGS

NO SCALE

CONSULTANT:

IOWA DEPARTMENT OF NATURAL RESOURCES

ENGINEERING SERVICES - WALLACE BUILDING
502 E. 9TH ST., DES MOINES, IA 50319-0034

MISC DETAILS

FISH CLEANING STATION FOR:

ELK ROCK STATE PARK

MARION COUNTY

NO.	BY / DATE	REVISION

DRAWN BY: PROJECT NUMBER: 15-05-63-01

CHK'D BY: DATE:

SHEET No: B.03

ESTIMATED PROJECT QUANTITIES

ITEM NO.	ITEM	UNIT	TOTAL
1	MOBILIZATION	L.S.	1
2	SHELTER (COMPLETE)	L.S.	1
3	CLEANING TABLE/GRINDER ASSY W/VFT	EACH	1
4	2,250 GALLON SETTLING TANK	EACH	1
5	1" DIA. POLYETHYLENE WATER LINE	L.F.	23
6	2" HDPE WATER MAIN	L.F.	1,360
7	6" DIA. PVC SCH 40 SEWER PIPE	L.F.	45
8	DUPLEX FRP LIFT STATION	EACH	1
9	2" HDPE SEWER PIPE	L.F.	1,000
10	CONNECTION TO EXISTING MANHOLE	L.S.	1
11	6" REINFORCED PCC(PARKING, SIDEWALK, PAD)	S.Y.	104
12	6" SPECIAL BACKFILL	TONS	33
13	HANDICAP PAVEMENT MARKING & SIGN	L.S.	1
14	ELECTRIC CONNECTIONS	L.S.	1
15	SITE RESTORATION	L.S.	1

ESTIMATE REFERENCE INFORMATION

ITEM NO.	DESCRIPTION
3	A. 2,250 GALLON, 3 COMPARTMENT SEPTIC TANK
14	A. ELECTRIC CONNECTIONS TO INCLUDE ALL WIRE AND HARWARE NEEDED TO CONNECT LIFT STATION AND FISH CLEANING STATION TO TRANSFORMER B. ALL ELECTRIC WORK TO COMPLY WITH N.E.C.
15	A. SITE RESTORATION TO INCLUDE MINOR GRADING AROUND SHELTER AND SEEDING, FERTILIZING & MULCHING ANY AREASDISTURBED BY WORK ACTIVITIES AS DIRECTED BY DNR CONSTRUCTION INSPECTOR

GENERAL NOTES

Verify actual locations and elevations with DNR Engineer.

All work shall conform to and be performed in accordance with all applicable codes and ordinances.

The contractor shall visit the site and inspect the project area and thoroughly familiarize themselves with the actual job conditions prior to bidding and the start of work. Failure to visit the project site shall not relieve the contractor from performing the work in accordance to the plans, specification, special provisions and contract.

The contractor shall verify, at the site, all dimensions and conditions shown on the plans and shall notify the DNR Engineer of any discrepancies, omissions, and/or conflicts prior to proceeding with the work.

It shall be the contractor's responsibility to provide waste areas or disposal sites for excess material (excavated material or broken concrete) which is not desirable to be incorporated into the work involved on this project. No payment for overhaul will be allowed for material hauled to these sites. No material shall be placed within the right-of-way, unless specifically stated in the plans or approved by the DNR Engineer.

The contractor shall not disturb desirable grass areas and desirable trees outside the construction limits. The contractor will not be permitted to park or service vehicles and equipment or use these areas for storage of materials. Storage, parking and service areas will be subject to the approval of the DNR Engineer.

Where utilities and fixtures are shown as Existing on the plans or encountered within the construction area, it shall be the responsibility of the contractor to notify the DNR Engineer of those utilities prior to the beginning of any construction. The contractor shall be afforded access to these facilities for necessary modification of services. Underground facilities, structures and utilities have been plotted from available surveys and records and therefore their locations must be considered approximate only. It is possible there may be others, the existence of which is presently not known or shown. It is the contractor's responsibility to determine their existence and exact location and to avoid damage thereto. No claims for additional compensation will be allowed to the contractor for any interference or delay caused by such work.

The contractor shall shape graded area to maintain surface drainage. All elevations are to finish grade.

The contractor is expected to have materials, equipment, and labor available on a daily basis to install and maintain erosion control features on the project. This may involve seeding, silt fence, rock ditch checks, silt basins or silt dikes.

CONSULTANT:

IOWA DEPARTMENT OF NATURAL RESOURCES
ENGINEERING SERVICES - WALLACE BUILDING
502 E. 9TH ST., DES MOINES, IA 50319-0034

QUANTITIES AND GENERAL INFORMATION

FISH CLEANING STATION FOR:
ELK ROCK STATE PARK
MARION COUNTY

NO.	BY / DATE	REVISION

DRAWN BY:
PROJECT NUMBER: 15-05-63-01
CHK'D BY:
DATE:
SHEET No: C.01

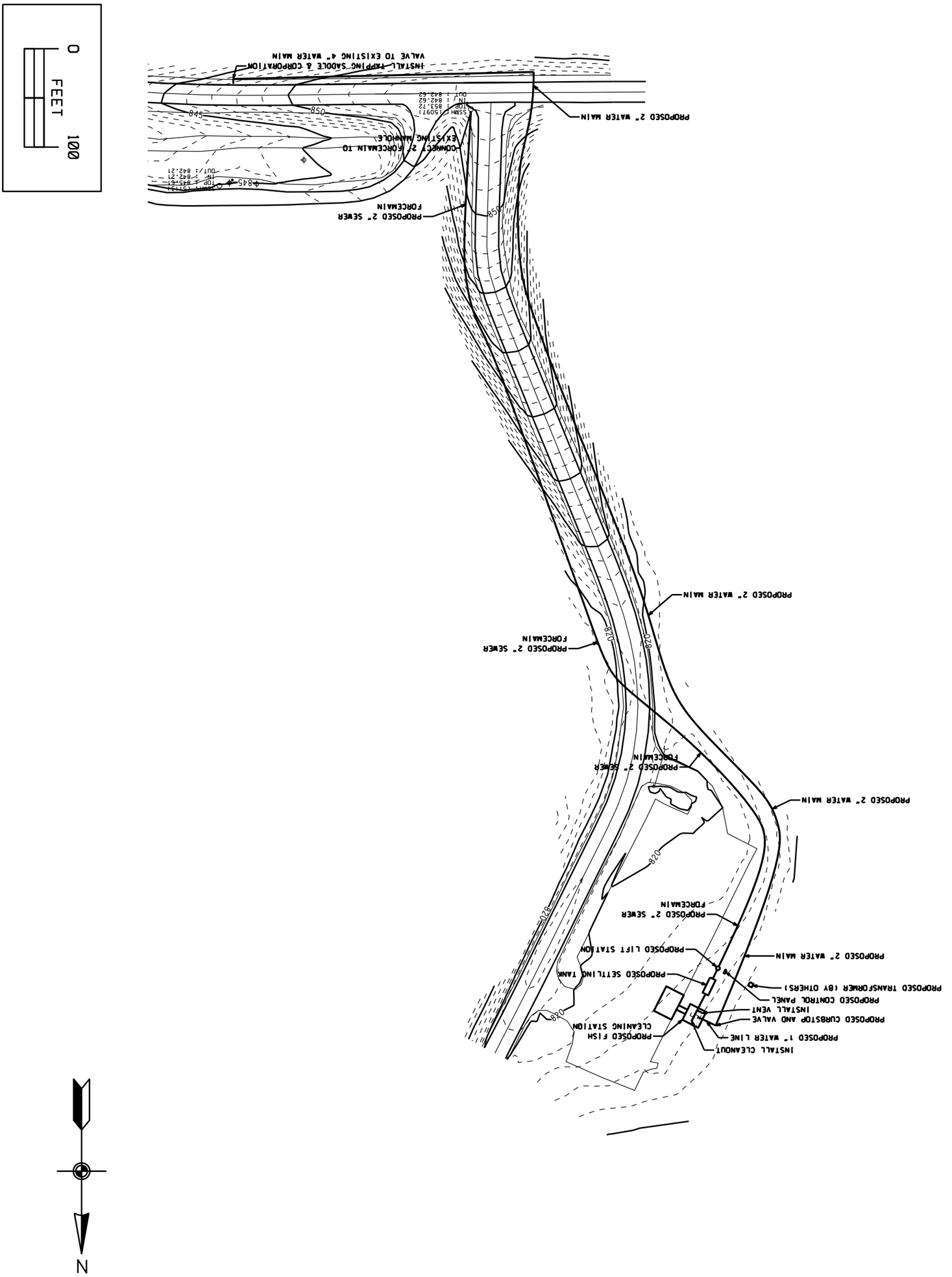

SHEET NO: D.01	CHKD BY: DATE:	DRAWN BY: PROJECT NUMBER: 15-05-63-01	NO.	DATE	REVISION	OVERALL SITE PLAN FISH CLEANING STATION FOR: ELK ROCK STATE PARK MARION COUNTY		IOWA DEPARTMENT OF NATURAL RESOURCES ENGINEERING SERVICES - WALLACE BUILDING 502 E. 9TH ST., DES MOINES, IA 50319-0034		CONSULTANT:

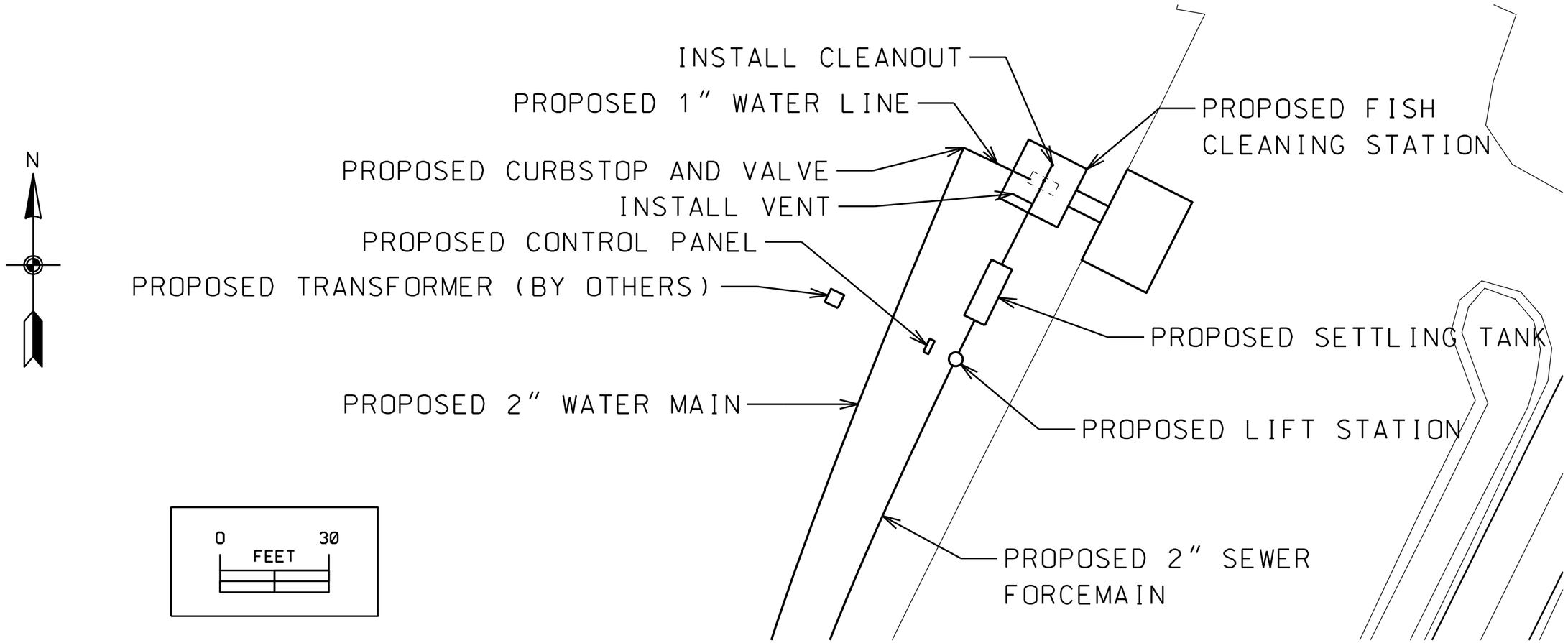

SITE NOTES:

1. SETTLING TANK SCUTTLE HOLE LIDS AND RISERS(IF NEEDED) SHALL BE SUPPLIED WITH THE SETTLING TANK AND CONSIDERED INCIDENTAL

2. APPROXIME ELEVATIONS FOR SITE ARE:
   TOP OF SHELTER SLAB = 818.0
   TOP OF SETTLING TANK = 816.0
   FL SETTLING TANK INLET = 815.0
   FL SETTLING TANK OUTLET = 814.8
   FL INLET TO LIFT STA. = 813.8

3. TRIM OUT CURB STOP BOX AT GRADE WITH 2' SQUARE, 4" THICK PCC COLLAR. STUB PE PIPE INTO SHELTER PAD.

4. THE INTERNAL BREAKER BOX OF THE FISH CLEANING TABLE SHALL HAVE A DEDICATED BREAKER FOR THE FOLLOWING: FISH GRINDER, TABLE OUTLETS, AND SHELTER LIGHTING

5. PROPOSED UNDERGROUND ELECTRIC SERVICE - THE CONTRACTOR SHALL COORDINATE WITH PELLA COOPERATIVE ELECTRIC AND THE DNR CONSTRUCTION INSPECTOR.

6. CONTRACTOR SHALL REINFORCE PCC WITH NO. 4 REBARS ON 2' CENTERS AS DIRECTED BY DNR CONSTRUCTION INSPECTOR.

7. WATERLINE & SEWER FORCEMAIN TO BE INSTALLED AT A MINIMUM DEPTH OF 5 FEET.

ELECTRIC CIRCUIT SCHEDULE FOR SHELTER:
120 VAC, 15 AMP. (OUTLETS)
120 VAC, 15 AMP. (LIGHTING)
220 VAC, 30 AMP. (GRINDER)

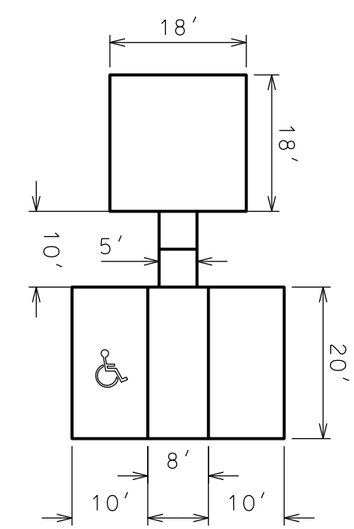

PCC JOINTING DETAIL

CONSULTANT:

IOWA DEPARTMENT OF NATURAL RESOURCES

ENGINEERING SERVICES - WALLACE BUILDING
502 E. 9TH ST., DES MOINES, IA 50319-0034

SHELTER AREA SITE PLAN

FISH CLEANING STATION FOR:
ELK ROCK STATE PARK

MARION COUNTY

NO.	BY / DATE	REVISION

DRAWN BY: PROJECT NUMBER: 15-05-63-01

CHK'D BY: DATE:

SHEET No: D.02