IOWA DEPARTMENT OF NATURAL RESOURCES

CONSTRUCTION DOCUMENTS FOR SPRINGBROOK STATE PARK BRIDGE, CULVERT & ROADWAY OVERLAY PROJECT GUTHRIE COUNTY, IOWA

DNR PROJECT #15-04-39-02

IDOT PROJECT # SP-650-0(8-10)--7C-39

IOWA ONE CALL 1-800-292-8989 www.iowaonecall.com 811

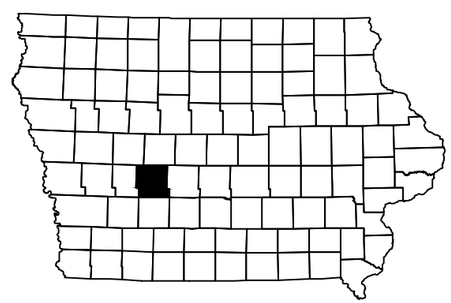

LICENSED PROFESSIONAL ENGINEER BRETT A. JOHNSON 13653 IOWA

I HEREBY CERTIFY THAT THIS ENGINEERING DOCUMENT WAS PREPARED BY ME OR UNDER MY DIRECT PERSONAL SUPERVISION AND THAT I AM A DULY LICENSED PROFESSIONAL ENGINEER UNDER THE LAWS OF THE STATE OF IOWA.

BRETT A. JOHNSON, IOWA REG. NO. 13653 DATE

MY LICENSE RENEWAL DATE IS DECEMBER 31, 2015

PAGES OR SHEETS COVERED BY THIS SEAL:

SHEETS 1–35 OF SITE #1,

ROADWAY OVERLAY PROJECT

SHEET INDEX

OVERALL COVER SHEET	
SITE #1: ROADWAY OVERLAY PROJECT # SP–650–0(8)--7C–39	
1	COVER SHEET
2	VICINITY MAPS
3	QUANTITIES & GENERAL NOTES
4	SURVEY CONTROL
5	OVERALL SITE PLAN
6	DEMOLITION PLAN
7	DEMOLITION PLAN
8	DEMOLITION PLAN
9	DEMOLITION PLAN
10	STORM SEWER PLAN
11	STORM SEWER PLAN
12	STORM SEWER PLAN
13	PLAN/PROFILE
14	PLAN/PROFILE
15	PLAN/PROFILE
16	PLAN/PROFILE
17	STANDARD DETAILS
18	JOINTING DETAILS
19	JOINTING DETAILS
20	JOINTING DETAILS
21	JOINTING DETAILS
22	CROSS-SECTIONS
23	CROSS-SECTIONS
24	CROSS-SECTIONS
25	CROSS-SECTIONS
26	CROSS-SECTIONS
27	CROSS-SECTIONS
28	CROSS-SECTIONS
29	CROSS-SECTIONS
30	CROSS-SECTIONS
31	CROSS-SECTIONS
32	CROSS-SECTIONS
33	CROSS-SECTIONS
34	CROSS-SECTIONS
35	CROSS-SECTIONS
SITE #2: BRIDGE REPLACEMENT PROJECT #SP–650–0(9)--7C–39 (CONTAINS 36 SHEETS)	
SITE #3: CULVERT REPLACEMENT PROJECT #SP–650–0(10)--7C–39 (CONTAINS 35 SHEETS)	

DIRECTORY

PROJECT MANAGER		CONSTRUCTION INSPECTOR	
COMPANY	IOWA DEPARTMENT OF NATURAL RESOURCES	COMPANY	IOWA DEPARTMENT OF NATURAL RESOURCES
ADDRESS	502 EAST 9TH STREET	ADDRESS	502 EAST 9TH STREET
CITY,STATE,ZIP	DES MOINES, IA 50319	CITY,STATE,ZIP	DES MOINES, IA 50319
CONTACT	BRETT JOHNSON	CONTACT	MARK JOHNSON
TELEPHONE	515-250-3711	TELEPHONE	515-250-3713
FAX	515-281-8685	FAX	
EMAIL	brett.johnson@dnr.iowa.gov	EMAIL	mark.johnson@dnr.iowa.gov

PROJECT DESCRIPTION

THIS PROJECT CONTAINS TREE SITE LOCATIONS OF CONSTRUCTION. THE FIRST SITE IS A ROADWAY OVERLAY PROJECT AND INCLUDES THE REMOVAL OF EXISTING INTAKES, SAW CUTTING AND REMOVING PART OF THE EXISTING ASPHALT PARK ROAD AND THE CONSTRUCTION OF A NEW STORM SEWER SYSTEM, OVERLAYING AND EXTENDING THE EXISTING ASPHALT ROADWAY WITH PCC PAVEMENT FOR A DISTANCE OF ROUGHLY 1,861 LINEAL FEET, REQUIRING CLEARING AND GRUBBING, FINISH GRADING, STORM SEWER CONSTRUCTION AND SEEDING/FERTILIZING/MULCHING ALL DISTURBED AREAS. THE SECOND SITE IS FOR THE BRIDGE REPLACEMENT AND REQUIRES THE REMOVAL OF AN EXISTING FOUR CELLED 9'x5' BOX CULVERT AND THE CONSTRUCTION OF A NEW STRUCTURAL CONCRETE BRIDGE. THE THIRD SITE CONSISTS OF CULVERT REPLACEMENT AND REQUIRES THE REMOVA; OF FOUR 15" DIAMETER METAL CULVERTS AND THE INSTALLATION OF A TWIN 10'x5'x32' REINFORCED CONCRETE BOX CULVERT. ALL THREE SITES LOCATED AT SPRINGBROOK STATE PARK IN GUTHRIE COUNTY, IOWA.

AUTHORIZATION TO BID

AUTHORIZATION - PARKS | WILDLIFE | FISHERIES | LAW ENFORCEMENT | FORESTRY DATE

ENGINEERING BUREAU CHIEF DATE

CONSULTANT:

IOWA DEPARTMENT OF NATURAL RESOURCES

ENGINEERING SERVICES - WALLACE BUILDING
502 E. 9TH ST., DES MOINES, IA 50319-0034

COVER SHEET

ROADWAY OVERLAY PROJECT FOR:

SPRINGBROOK STATE PARK

GUTHRIE COUNTY, IOWA

NO.	BY DATE	REVISION

DRAWN BY: PROJECT NUMBER: 15–04–39–02

CHK'D BY: DATE: 07/01/2015

SHEET No:

IOWA DEPARTMENT OF NATURAL RESOURCES

CONSTRUCTION DOCUMENTS FOR SPRINGBROOK STATE PARK ROADWAY OVERLAY PROJECT GUTHRIE COUNTY, IOWA

DNR PROJECT #15-04-39-02
IDOT PROJECT # SP-650-0(8)--7C-39

IOWA ONE CALL
1-800-292-8989
www.iowaonecall.com
811

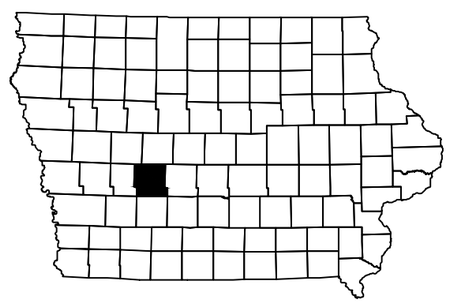

LICENSED PROFESSIONAL ENGINEER
BRETT A. JOHNSON
13653
IOWA

I HEREBY CERTIFY THAT THIS ENGINEERING DOCUMENT WAS PREPARED BY ME OR UNDER MY DIRECT PERSONAL SUPERVISION AND THAT I AM A DULY LICENSED PROFES-SIONAL ENGINEER UNDER THE LAWS OF THE STATE OF IOWA.

BRETT A. JOHNSON, IOWA REG. NO. 13653 DATE
MY LICENSE RENEWAL DATE IS DECEMBER 31, 2015

PAGES OR SHEETS COVERED BY THIS SEAL:
SHEETS 1–35

SHEET INDEX

1	COVER SHEET
2	VICINITY MAPS
3	QUANTITIES & GENERAL NOTES
4	SURVEY CONTROL
5	OVERALL SITE PLAN
6	DEMOLITION PLAN
7	DEMOLITION PLAN
8	DEMOLITION PLAN
9	DEMOLITION PLAN
10	STORM SEWER PLAN
11	STORM SEWER PLAN
12	STORM SEWER PLAN
13	PLAN/PROFILE
14	PLAN/PROFILE
15	PLAN/PROFILE
16	PLAN/PROFILE
17	STANDARD DETAILS
18	JOINTING DETAILS
19	JOINTING DETAILS
20	JOINTING DETAILS
21	JOINTING DETAILS
22	CROSS-SECTIONS
23	CROSS-SECTIONS
24	CROSS-SECTIONS
25	CROSS-SECTIONS
26	CROSS-SECTIONS
27	CROSS-SECTIONS
28	CROSS-SECTIONS
29	CROSS-SECTIONS
30	CROSS-SECTIONS
31	CROSS-SECTIONS
32	CROSS-SECTIONS
33	CROSS-SECTIONS
34	CROSS-SECTIONS
35	CROSS-SECTIONS

DIRECTORY

PROJECT MANAGER		CONSTRUCTION INSPECTOR	
COMPANY	IOWA DEPARTMENT OF NATURAL RESOURCES	COMPANY	IOWA DEPARTMENT OF NATURAL RESOURCES
ADDRESS	502 EAST 9TH STREET	ADDRESS	502 EAST 9TH STREET
CITY,STATE,ZIP	DES MOINES, IA 50319	CITY,STATE,ZIP	DES MOINES, IA 50319
CONTACT	BRETT JOHNSON	CONTACT	MARK JOHNSON
TELEPHONE	515-250-3711	TELEPHONE	515-250-3713
FAX	515-281-8685	FAX	
EMAIL	brett.johnson@dnr.iowa.gov	EMAIL	mark.johnson@dnr.iowa.gov

PROJECT DESCRIPTION

THE PROJECT INCLUDES THE REMOVAL OF EXISTING INTAKES, SAW CUTTING AND REMOVING PART OF THE EXISTING ASPHALT PARK ROAD AND THE CONSTRUCTION OF A NEW STORM SEWER SYSTEM, OVERLAYING AND EXTENDING THE EXISTING ASPHALT ROADWAY WITH PCC PAVEMENT FOR A DISTANCE OF ROUGHLY 1,861 LINEAL FEET, REQUIRING CLEARING AND GRUBBING, FINISH GRADING, STORM SEWER CONCTUCTION AND SEEDING/FERTILIZING/MULCHING ALL DISTURBED AREAS LOCATED AT SPRINGBROOK STATE PARK IN GUTHRIE COUNTY, IOWA.

AUTHORIZATION TO BID

AUTHORIZATION - PARKS | WILDLIFE | FISHERIES | LAW ENFORCEMENT | FORESTRY DATE

ENGINEERING BUREAU CHIEF DATE

CONSULTANT:

IOWA DEPARTMENT OF NATURAL RESOURCES
ENGINEERING SERVICES - WALLACE BUILDING
502 E. 9TH ST., DES MOINES, IA 50319-0034

COVER SHEET
ROADWAY OVERLAY PROJECT FOR:
SPRINGBROOK STATE PARK
GUTHRIE COUNTY, IOWA

NO.	BY / DATE	REVISION

DRAWN BY:
PROJECT NUMBER: 15–04–39–02
CHK'D BY:
DATE: 07/01/2015
SHEET No: 1

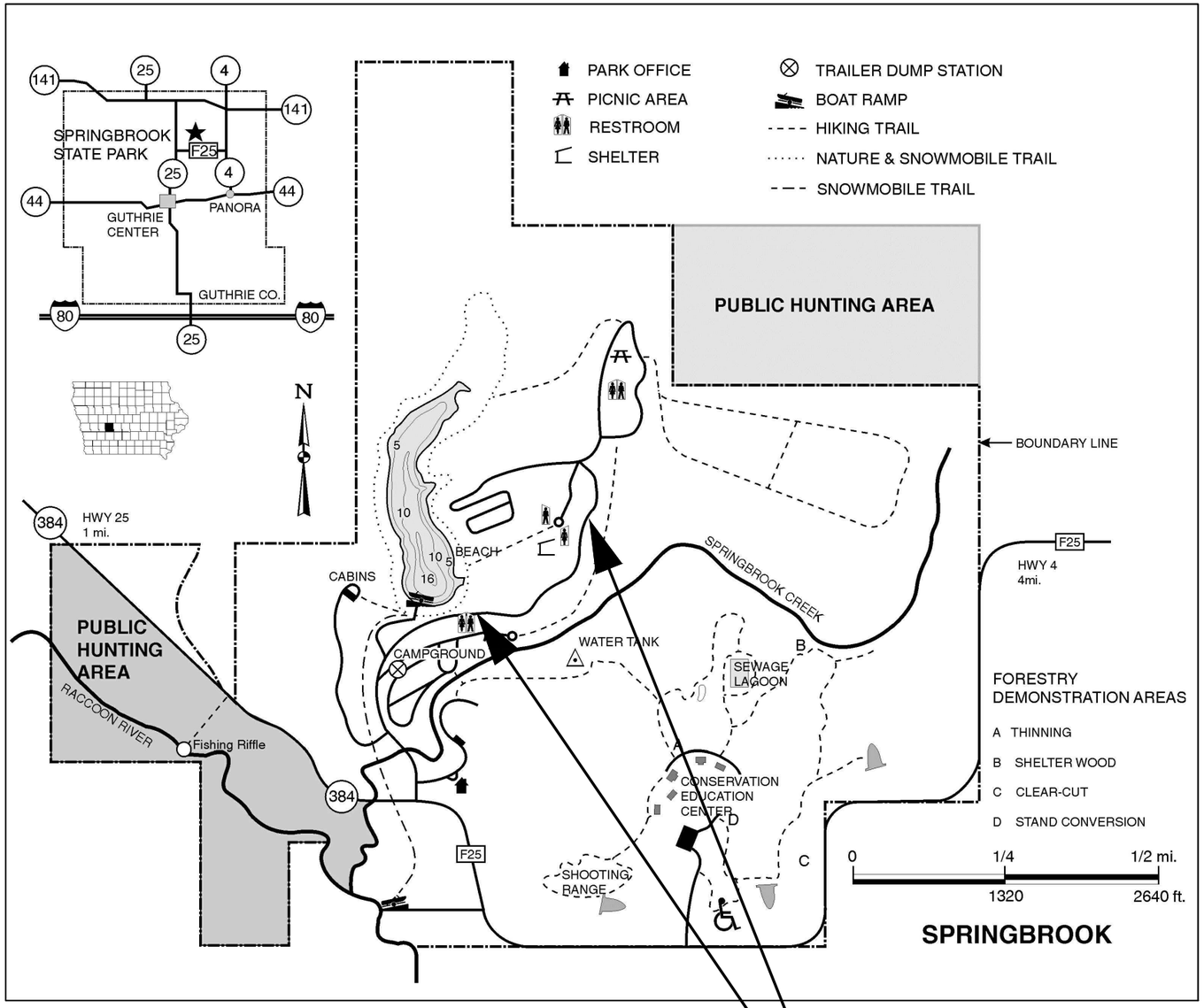

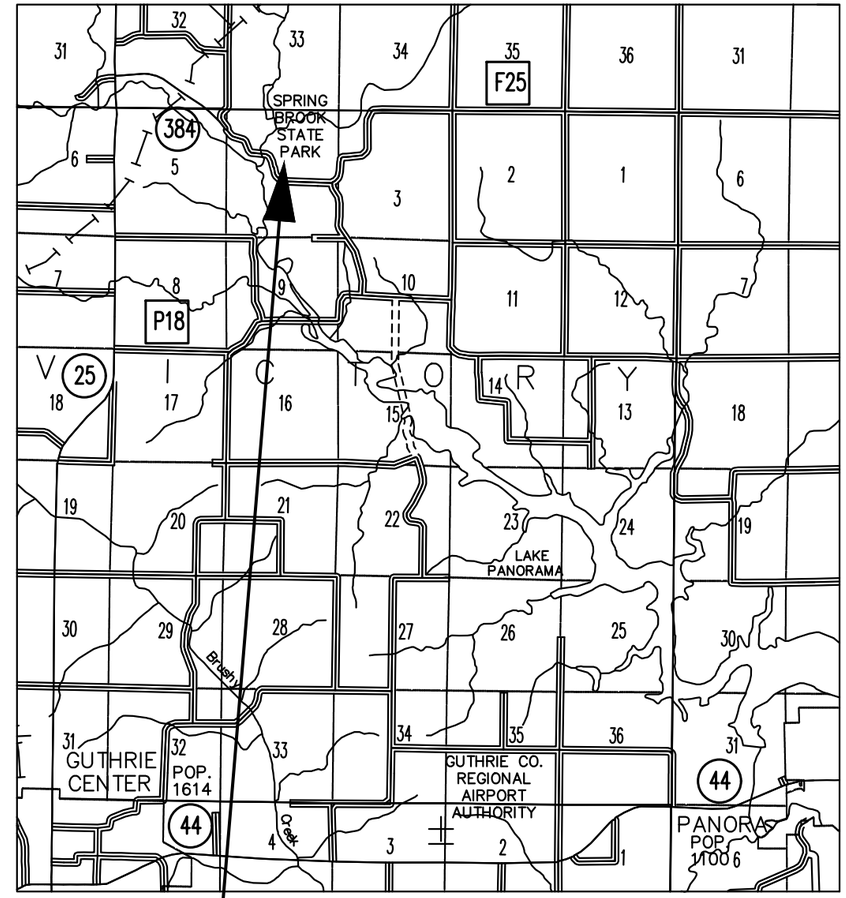

PROJECT LOCATION

CONSULTANT:

IOWA DEPARTMENT OF NATURAL RESOURCES

ENGINEERING SERVICES - WALLACE BUILING
502 E. 9TH ST., DES MOINES, IA 50319-0034

VICINITY MAPS

ROADWAY OVERLAY PROJECT FOR:

SPRINGBROOK STATE PARK

GUTHRIE COUNTY, IOWA

NO.	BY DATE	REVISION

DRAWN BY:

CHK'D BY:

PROJECT NUMBER: 15-04-39-02

DATE: 07/01/2015

SHEET No: 2

ESTIMATED PROJECT QUANTITIES

ITEM NO.	ITEM	UNIT	P&I
1	REMOVAL OF EXISTING STRUCTURES	LS	1
2	CLEARING AND GRUBBING	LS	1
3	FULL DEPTH SAW CUT	LF	3,704
4	HMA PAVEMENT REMOVAL	SY	1,055
5	12-INCH RCP CLASS III	LF	1,204
6	15-INCH RCP CLASS III	LF	435
7	18-INCH RCP CLASS III	LF	60
8	SW-501 SINGLE GRATE INTAKE W/SW-603 TYPE 'R' CASTING	EA	10
9	SW-512 CIRCULAR AREA INTAKE (24" RISER) W/SW-604 TYPE '3B' CASTING	EA	1
10	SW-512 CIRCULAR AREA INTAKE (18" RISER) W/SW-604 TYPE '3B' CASTING	EA	4
11	SW-513 4'x4' OPEN SIDED INTAKE W/SW-602 TYPE 'G' CASTING	EA	1
12	SPECIAL BACKFILL	TONS	409
13	GRANULAR SHOULDER	TONS	126
14	SURFACE PREPARATION	SY	3,303
15	PCC PAVEMENT PLACEMENT	SY	4,539
16	IOWA DOT CLASS 'C' CONCRETE	CY	1,011
17	36-INCH #4 EPOXY COATED REINFORCING BAR	EA	714
18	FINISH GRADING	LS	1
19	SEEDING, FERTILIZING AND MULCHING	LS	1
20	8-INCH FILTER SOCK	LF	100
21	TRAFFIC CONTROL	LS	1
22	CONSTRUCTION SURVEY STAKING	LS	1
23	MOBILIZATION	LS	1

GENERAL NOTES

1. TWO WEEKS PRIOR TO CONSTRUCTION THE CONTRACTOR SHALL NOTIFY:
   A. IOWA DNR PROJECT MANAGER: BRETT JOHNSON 515-250-3711
   B. DISTRICT INSPECTOR: MARK JOHNSON 515-250-3713

2. ALL CONSTRUCTION SHALL BE IN ACCORDANCE WITH STATEWIDE URBAN STANDARD DESIGN SPECIFICATIONS FOR PUBLIC IMPROVEMENTS (SUDAS).

3. THE CONTRACTOR SHALL VERIFY THE EXISTING CONDITIONS PRIOR TO THE START OF CONSTRUCTION AND NOTIFY THE ABOVE MENTIONED CONTACTS OF ANY DISCREPANCIES.

4. THE LOCATIONS AND DIMENSIONS SHOWN ON THE PLANS FOR EXISTING FACILITIES ARE IN ACCORDANCE WITH AVAILABLE INFORMATION WITHOUT UNCOVERING AND MEASURING. THE ENGINEER DOES NOT GUARANTEE THE ACCURACY OF THIS INFORMATION OR THAT ALL EXISTING UNDERGROUND FACILITIES ARE SHOWN. IT IS THE RESPONSIBILITY OF THE CONTRACTOR TO CONTACT ALL PUBLIC AND/OR PRIVATE UTILITIES SERVING THE AREA TO DETERMINE THE PRESENT EXTENT AND LOCATION OF THEIR FACILITIES BEFORE BEGINNING WORK.

5. THE CONTRACTOR IS REQUIRED TO TAKE DUE PRECAUTIONARY MEASURES TO PROTECT THE UTILITIES OR STRUCTURES AT THE SITE. IT SHALL BE THE CONTRACTOR'S RESPONSIBILITY TO NOTIFY THE PROPER UTILITY IMMEDIATELY UPON BREAKING OR DAMAGE TO ANY UTILITY LINE OR APPURTENANCE, OR THE INTERRUPTION OF THEIR SERVICE. HE SHALL NOTIFY THE PROPER UTILITY INVOLVED. IF EXISTING UTILITY LINES ARE ENCOUNTERED THAT CONFLICT IN LOCATION WITH NEW CONSTRUCTION, THE CONTRACTOR SHALL NOTIFY THE ENGINEER SO THAT THE CONFLICT CAN BE RESOLVED.

6. CONTRACTOR TO PROTECT ALL UTILITY, PAVING, BUILDINGS, ETC. OUTSIDE OF LIMITS OF PROPOSED CONSTRUCTION.

7. PROTECT EXISTING TREES AND VEGETATION OUTSIDE OF CONSTRUCTION CORRIDOR.

8. ALL MATERIAL AND CONSTRUCTION TESTING WILL BE HANDLES UNDER A SEPARATE CONTRACT.

ESTIMATE REFERENCE INFORMATION

ITEM NO.	DESCRIPTION
1	REMOVAL OF EXISTING STRUCTURES A. CONTRACTOR TO REMOVE/DISPOSE EXISTING INTAKE/CULVERT STRUCTURES AS DETAILED IN THE PLANS ON SHEETS #6-9.
2	CLEARING AND GRUBBING A. CONTRACTOR TO CLEAR AND GRUB THE PROJECT SITE.
3	FULL DEPTH SAW CUT A. CONTRACTOR SHALL SAW CUT EXISTING PAVEMENTS FULL DEPTH IN THE LOCATIONS SHOWN ON THE DEMOLITION PLAN SHEETS #6-9.
4	HMA PAVEMENT REMOVAL A. CONTRACTOR SHALL REMOVE THE EXISTING HMA PARK ROAD AS SHOWN ON THE DEMOLITION PLAN SHEETS #6-9. THE HMA PARK ROAD IS ASSUMED TO BE AN AVERAGE OF 5-INCHES OF THICKNESS. MAY USE CRUSHED HMA AS SPECIAL BACKFILL.
5	12-INCH RCP CLASS III A. CONTRACTOR SHALL INSTALL 12-INCH RCP CLASS III AS DETAILED IN THE PLANS ON SHEETS #10-12.
6	15-INCH RCP CLASS III A. CONTRACTOR SHALL INSTALL 15-INCH RCP CLASS III AS DETAILED IN THE PLANS ON SHEETS #10.
7	18-INCH RCP CLASS III A. CONTRACTOR SHALL INSTALL 15-INCH RCP CLASS III AS DETAILED IN THE PLANS ON SHEETS #10.
8	SW-501 SINGLE GRATE INTAKE W/SW-603 TYPE 'R' CASTING A. CONTRACTOR SHALL INSTALL SW-501 SINGLE GRATE INTAKE W/SW-603 TYPE 'R' CASTING AS DETAILED IN THE PLANS ON SHEETS #10-12.
9	SW-512 CIRCULAR AREA INTAKE (24" RISER) W/SW-604 TYPE '3B' CASTING A. CONTRACTOR SHALL INSTALL SW-512 CIRCULAR AREA INTAKE (24" RISER) W/SW-604 TYPE '3B' CASTING AS DETAILED IN THE PLANS ON SHEETS #10-12.
10	SW-512 CIRCULAR AREA INTAKE (18" RISER) W/SW-604 TYPE '3B' CASTING A. CONTRACTOR SHALL INSTALL SW-512 CIRCULAR AREA INTAKE (18" RISER) W/SW-604 TYPE '3B' CASTING AS DETAILED IN THE PLANS ON SHEETS #10-12.
11	SW-513 4'x4' OPEN SIDED INTAKE W/SW-602 TYPE 'G' CASTING A. CONTRACTOR SHALL INSTALL SW-513 4'x4' OPEN SIDED INTAKE W/SW-602 TYPE 'G' CASTING AS DETAILED IN THE PLANS ON SHEETS #10-12.
12	SPECIAL BACKFILL A. CONTRACTOR SHALL INSTALL SPECIAL BACKFILL FOR THE ROADWAY BASE IN ACCORDANCE WITH IDOT SECTION 4132. SPECIAL BACKFILL CAN BE CRUSHED HMA IN ACCORDANCE WITH IDOT 4132.04.
13	GRANULAR SHOULDER A. CONTRACTOR TO INSTALL 2-FOOT WIDE 6-INCH DEPTH OF GRANULAR SHOULDER. B. GRANULAR SHOULDER TO BE CLASS 'A' CRUSHED STONE MEETING THE REQUIREMENT OF IDOT SECTION 4121 FOR GRADATION #11 WITH A MAXIMUM OF 4% MUD BALLS AND A MINIMUM OF 4% PASSING NO. 200 SIEVE.
14	SURFACE PREPARATION A. CONTRACTOR SHALL CONDUCT SURFACE PREPARATION OF THE EXISTING PAVEMENT SURFACE FOR OVERLAY. PREPARATION SHALL INCLUDE SHOTBLASTING THE EXISTING SURFACE, CLEANING THE SURFACE TO REMOVE ALL LOOSE MATERIAL (SWEEPING) FOLLOWED BY AIR OR WATERBLASTING THE SURFACE IN FRONT OF THE PAVER TO ENSURE ADEQUATE BONDING.
15	PCC PAVEMENT PLACEMENT A. CONTRACTOR SHALL PLACE THE PCC PAVEMENT IN THE LOCATIONS AS DETAILED IN THE PLANS.
16	IOWA DOT CLASS 'C' PAVEMENT A. CONTRACTOR TO USE IOWA DOT CLASS 'C' PCC FOR THE OVERLAY.
17	36-INCH #4 EPOXY COATED REINFORCING BARS A. CONTRACTOR TO INSTALL 36-INCH #4 EPOXY COATED REINFORCING BARS 30-INCHES ON CENTER IN LOCATIONS SHOWN IN THE PLANS.
18	FINISH GRADING A. CONTRACTOR TO FINISH GRADE THE SITE AS DETAILED IN THE PLANS.
19	SEEDING, FERTILIZING AND MULCHING A. THE CONTRACTOR SHALL SEED, FERTILIZE AND MULCH ALL DISTURBED AREAS. SEED WITH TYPE 1 SEED MIXTURE (PERMANENT LAWN MIXTURE).
20	8-INCH FILTER SOCK A. CONTRACTOR SHALL INSTALL 8-INCH FILTER SOCK AS DETAILED IN THE PLANS. ADDITIONAL SILT FENCING/FILTER SOCKS MAY BE REQUIRED BY THE DNR INSPECTOR TO CONTROL EROSION.
21	TRAFFIC CONTROL A. CONTRACTOR SHALL INSTALL TYPE III BARRICADES WITH ROAD CLOSED SIGNAGE AT THE BEGINNING OF THE PROJECT. MAINTAIN ACCESS TO THE NORTHBOUND DRIVE JUST PRIOR TO THE PROJECT SITE.
22	CONSTRUCTION SURVEY STAKING A. CONTRACTOR IS RESPONSIBLE FOR THE CONSTRUCTION SURVEY STAKING FOR THE PROJECT.

CONSULTANT:

IOWA DEPARTMENT OF NATURAL RESOURCES
ENGINEERING SERVICES - WALLACE BUILDING
502 E. 9TH ST., DES MOINES, IA 50319-0034

QUANTITIES & GENERAL NOTES

ROADWAY OVERLAY PROJECT FOR:
SPRINGBROOK STATE PARK
GUTHRIE COUNTY, IOWA

NO.	BY DATE	REVISION

DRAWN BY:
PROJECT NUMBER: 15-04-39-02
CHK'D BY:
DATE: 07/01/2015
SHEET No: 3

NOTES
1. SURVEY CONTROL POINT COORDINATES ARE STATE PLANE.
2. SOME SURVEY CONTROL POINTS ARE WITHIN THE EXISTING ASPHALT PAVEMENT THAT WILL BE DEMOLISHED. CONTRACTOR/SURVEYOR MAY NEED TO ESTABLISH ADDITIONAL CONTROL POINTS OUTSIDE OF THE CONSTRUCTION CORRIDOR FOR CONSTRUCTION STAKING.

SURVEY CONTROL POINTS

SURVEY CONTROL POINT #13	
N:	648295.165
E:	1377110.271
ELEV:	1084.673
SET NAIL	

SURVEY CONTROL POINT #14	
N:	648265.663
E:	1377533.628
ELEV:	1118.721
SET NAIL	

SURVEY CONTROL POINT #15	
N:	648481.479
E:	1377719.667
ELEV:	1136.884
SET NAIL	

SURVEY CONTROL POINT #16	
N:	648638.813
E:	1377946.960
ELEV:	1153.847
SET NAIL	

SURVEY CONTROL POINT #17	
N:	648899.145
E:	1378029.389
ELEV:	1169.701
SET NAIL	

SURVEY CONTROL POINT #18	
N:	649303.227
E:	1378144.006
ELEV:	1201.363
SET NAIL	

SURVEY CONTROL POINT #19	
N:	649531.848
E:	1377985.632
ELEV:	1220.452
SET NAIL	

LEGEND

EXISTING/PROPOSED

- ST 8" — STORM SEWER
- E — ELECTRIC LINE
- W 2" — WATER MAIN
- 990 — ELEVATION

N

0 200
FEET

CONSULTANT:

IOWA DEPARTMENT OF NATURAL RESOURCES
ENGINEERING SERVICES - WALLACE BUILDING
502 E. 9TH ST., DES MOINES, IA 50319-0034

SURVEY CONTROL

ROADWAY OVERLAY PROJECT FOR:
SPRINGBROOK STATE PARK
GUTHRIE COUNTY, IOWA

NO.	BY DATE	REVISION

DRAWN BY:
PROJECT NUMBER: 15-04-39-02
CHK'D BY:
DATE: 07/01/2015
SHEET No: 4

LEGEND

EXISTING/PROPOSED

ST 8"	STORM SEWER
E	ELECTRIC LINE
W 2"	WATER MAIN
990 / 990	ELEVATION

N

0 200
FEET

CONSULTANT:

IOWA DEPARTMENT OF NATURAL RESOURCES

ENGINEERING SERVICES - WALLACE BUILDING
502 E. 9TH ST., DES MOINES, IA 50319-0034

OVERALL SITE PLAN

ROADWAY OVERLAY PROJECT FOR:

SPRINGBROOK STATE PARK

GUTHRIE COUNTY, IOWA

NO.	BY DATE	REVISION

DRAWN BY:
PROJECT NUMBER: 15-04-39-02
CHK'D BY:
DATE: 07/01/2015
SHEET No: 5

LEGEND

EXISTING/PROPOSED

— — ST 8" — —	STORM SEWER
— — E — —	ELECTRIC LINE
— — W 2" — —	WATER MAIN
990 990	ELEVATION

N

0 150
FEET

CONSULTANT:

IOWA DEPARTMENT OF NATURAL RESOURCES

ENGINEERING SERVICES - WALLACE BUILING
502 E. 9TH ST., DES MOINES, IA 50319-0034

OVERALL DEMOLITION PLAN

ROADWAY OVERLAY PROJECT FOR:

SPRINGBROOK STATE PARK

GUTHRIE COUNTY, IOWA

NO.	BY DATE	REVISION

DRAWN BY:
PROJECT NUMBER: 15-04-39-02
CHK'D BY:
DATE: 07/01/2015
SHEET No: 6

LEGEND

EXISTING/PROPOSED

- ST 8" — STORM SEWER
- E — ELECTRIC LINE
- W 2" — WATER MAIN
- 990 — ELEVATION
- ASPHALT DRIVE TO BE REMOVED

0 50 FEET

NOTES

1. THE SAW CUT LINE CONTROL FOR THE RIGHT EDGE IS AN 11-FOOT OFFSET FROM THE NEW PROPOSED CENTERLINE.
2. THE SAW CUT LINE CONTROL FOR THE LEFT EDGES #1-4 ARE A 5.5-FOOT OFFSET FROM THE NEW PROPOSED CENTERLINE.
3. THE EXISTING ASPHALT ROAD EDGE IN THOSE LOCATIONS NOT CONTAINED WITHIN REMOVAL AREAS, SHALL BE SAW CUT TO CREATE A CLEAN EDGE FOR THE NEW PAVEMENT.

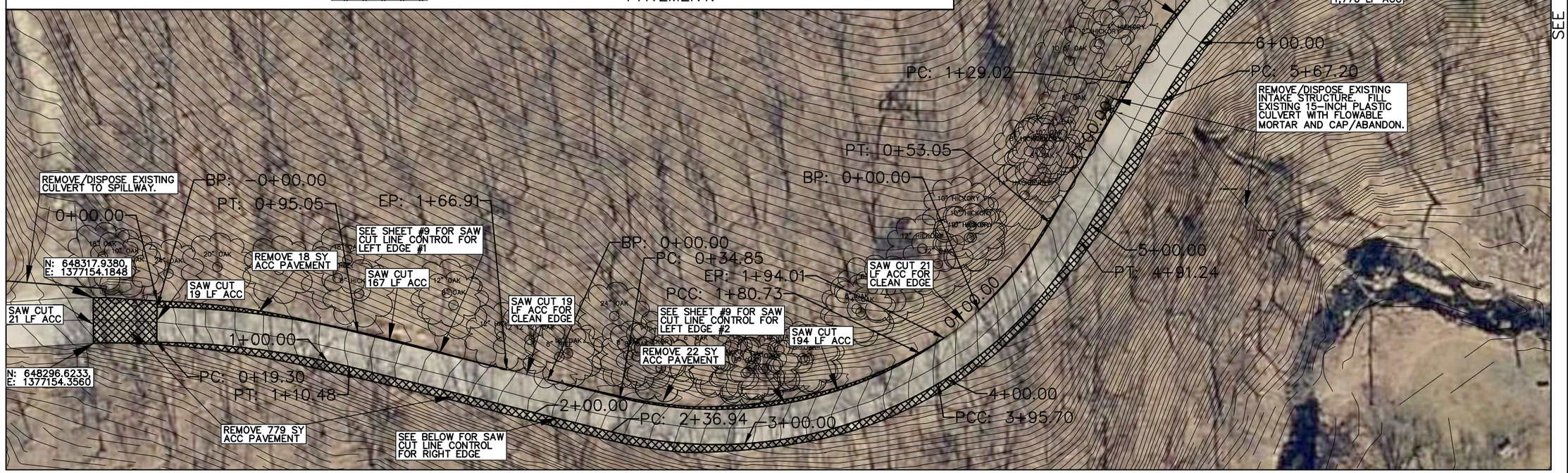

SEE SHEET #8 FOR CONTINUATION

SAW CUT LINE CONTROL RIGHT EDGE

No.	Type	Length	Radius	Direction	Start Station	End Station	Delta angle	Chord length	Chord Direction	Start Point	End Point	Center Point
1	Line	19.30'		S0° 31' 49"W	0+00.00'	0+19.30'				(1377184.1511',648316.4271')	(1377183.9725',648297.1248')	
2	Curve	91.18'	389.00'		0+19.30'	1+10.48'	13.4300 (d)	90.97'	S82° 45' 17"E	(1377183.9725',648297.1248')	(1377274.2183',648285.6518')	(1377180.3730',647908.1415')
3	Line	126.46'		S76° 02' 23"E	1+10.48'	2+36.94'				(1377274.2183',648285.6518')	(1377396.9437',648255.1435')	
4	Curve	158.75'	203.50'		2+36.94'	3+95.70'	44.6976 (d)	154.76'	N81° 36' 41"E	(1377396.9437',648255.1435')	(1377550.0474',648277.7209')	(1377446.0375',648452.6329')
5	Curve	95.54'	189.00'		3+95.70'	4+91.24'	28.9620 (d)	94.52'	N44° 46' 54"E	(1377550.0474',648277.7209')	(1377616.6294',648344.8126')	(1377453.4486',648440.1699')
6	Line	75.97'		N30° 18' 02"E	4+91.24'	5+67.20'				(1377616.6294',648344.8126')	(1377654.9579',648410.4026')	
7	Curve	163.53'	273.00'		5+67.20'	7+30.74'	34.3213 (d)	161.10'	N47° 27' 40"E	(1377654.9579',648410.4026')	(1377773.6583',648519.3195')	(1377890.6636',648272.6643')
8	Line	67.87'		N64° 37' 19"E	7+30.74'	7+98.60'				(1377773.6583',648519.3195')	(1377834.9762',648548.4067')	
9	Curve	272.83'	283.00'		7+98.60'	10+71.43'	55.2367 (d)	262.39'	N37° 00' 13"E	(1377834.9762',648548.4067')	(1377992.8970',648757.9480')	(1377713.6851',648804.0969')
10	Line	42.52'		N9° 23' 07"E	10+71.43'	11+13.95'				(1377992.8970',648757.9480')	(1377999.8311',648799.9015')	
11	Curve	77.21'	435.00'		11+13.95'	11+91.16'	10.1696 (d)	77.11'	N14° 28' 12"E	(1377999.8311',648799.9015')	(1378019.0984',648874.5638')	(1378429.0084',648728.9660')
12	Line	309.72'		N19° 33' 17"E	11+91.16'	15+00.88'				(1378019.0984',648874.5638')	(1378122.7637',649166.4188')	
13	Curve	128.27'	327.00'		15+00.88'	16+29.15'	22.4748 (d)	127.45'	N8° 19' 02"E	(1378122.7637',649166.4188')	(1378141.1998',649292.5265')	(1377814.6244',649275.8682')
14	Line	40.10'		N2° 55' 12"W	16+29.15'	16+69.26'				(1378141.1998',649292.5265')	(1378139.1568',649332.5778')	
15	Curve	119.25'	211.00'		16+69.26'	17+88.50'	32.3806 (d)	117.67'	N19° 06' 37"W	(1378139.1568',649332.5778')	(1378100.6343',649443.7590')	(1377928.4308',649321.8289')

CONSULTANT:

IOWA DEPARTMENT OF NATURAL RESOURCES

ENGINEERING SERVICES - WALLACE BUILING
502 E. 9TH ST., DES MOINES, IA 50319-0034

DEMOLITION PLAN

ROADWAY OVERLAY PROJECT FOR:

SPRINGBROOK STATE PARK

GUTHRIE COUNTY, IOWA

NO.	BY / DATE	REVISION

DRAWN BY:
PROJECT NUMBER: 15-04-39-02
CHK'D BY:
DATE: 07/01/2015
SHEET No: 7

SEE SHEET BELOW RIGHT FOR CONTINUATION

SEE SHEET #7 FOR CONTINUATION

SEE SHEET BELOW RIGHT FOR CONTINUATION

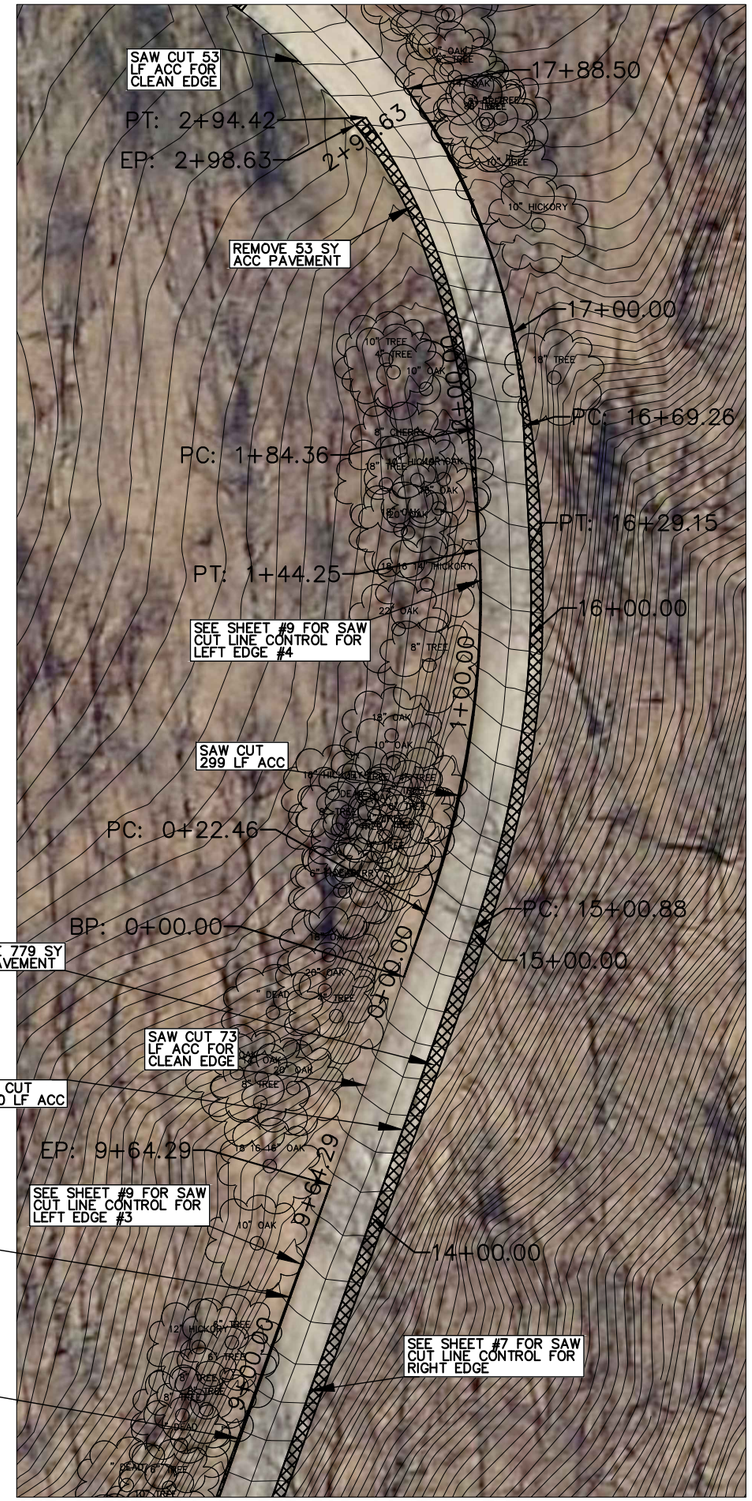

SEE SHEET ABOVE LEFT FOR CONTINUATION

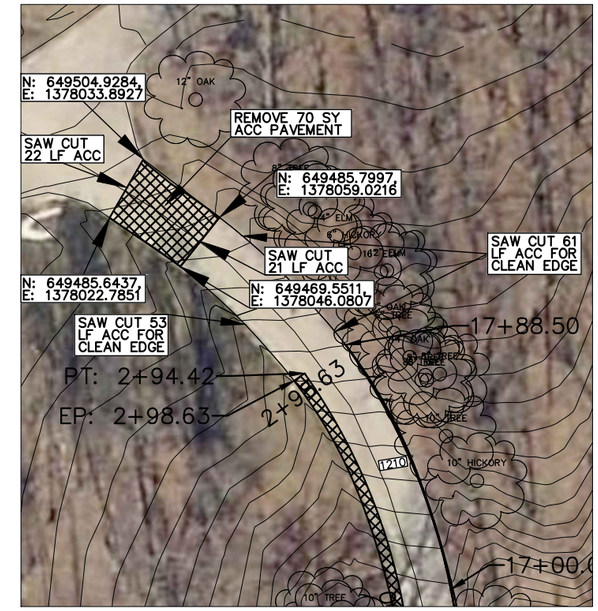

SEE SHEET ABOVE LEFT FOR CONTINUATION

NOTES

1. THE SAW CUT LINE CONTROL FOR THE RIGHT EDGE IS AN 11-FOOT OFFSET FROM THE NEW PROPOSED CENTERLINE.
2. THE SAW CUT LINE CONTROL FOR THE LEFT EDGES #1-4 ARE A 5.5-FOOT OFFSET FROM THE NEW PROPOSED CENTERLINE.
3. THE EXISTING ASPHALT ROAD EDGE IN THOSE LOCATIONS NOT CONTAINED WITHIN REMOVAL AREAS, SHALL BE SAW CUT TO CREATE A CLEAN EDGE FOR THE NEW PAVEMENT.

LEGEND

EXISTING/PROPOSED

- ST 8" — STORM SEWER
- E — ELECTRIC LINE
- W 2" — WATER MAIN
- 990 — ELEVATION
- ASPHALT DRIVE TO BE REMOVED

0 FEET 50

CONSULTANT:

IOWA DEPARTMENT OF NATURAL RESOURCES

ENGINEERING SERVICES - WALLACE BUILDING
502 E. 9TH ST., DES MOINES, IA 50319-0034

DNR

DEMOLITION PLAN

ROADWAY OVERLAY PROJECT FOR:

SPRINGBROOK STATE PARK

GUTHRIE COUNTY, IOWA

NO.	BY DATE	REVISION

DRAWN BY:
PROJECT NUMBER: 15-04-39-02
CHK'D BY:
DATE: 07/01/2015
SHEET No: 8

SAW CUT LINE CONTROL LEFT EDGE

SAW CUT LINE CONTROL LEFT EDGE #1

No.	Type	Length	Radius	Direction	Start Station	End Station	Delta angle	Chord length	Chord Direction	Start Point	End Point	Center Point
1	Curve	95.05'	405.50'		0+00.00'	0+95.05'	13.4300 (d)	94.83'	S82° 45' 17"E	(1377184.1252',648313.6241')	(1377278.1989',648301.6645')	(1377180.3730',647908.1415')
2	Line	71.86'		S76° 02' 23"E	0+95.05'	1+66.91'				(1377278.1989',648301.6645')	(1377347.9379',648284.3280')	

SAW CUT LINE CONTROL LEFT EDGE #2

No.	Type	Length	Radius	Direction	Start Station	End Station	Delta angle	Chord length	Chord Direction	Start Point	End Point	Center Point
1	Line	34.85'		S76° 02' 23"E	0+00.00'	0+34.85'				(1377367.1043',648279.5634')	(1377400.9243',648271.1561')	
2	Curve	145.88'	187.00'		0+34.85'	1+80.73'	44.6976 (d)	142.21'	N81° 36' 41"E	(1377400.9243',648271.1561')	(1377541.6142',648291.9028')	(1377446.0376',648452.6328')
3	Curve	13.27'	172.50'		1+80.73'	1+94.01'	4.4088 (d)	13.27'	N57° 03' 29"E	(1377541.6142',648291.9028')	(1377552.7510',648299.1191')	(1377453.4486',648440.1698')

SAW CUT LINE CONTROL LEFT EDGE #3

No.	Type	Length	Radius	Direction	Start Station	End Station	Delta angle	Chord length	Chord Direction	Start Point	End Point	Center Point
1	Curve	53.05'	172.50'		0+00.00'	0+53.05'	17.6210 (d)	52.84'	N39° 06' 40"E	(1377569.0492',648312.1355')	(1377602.3836',648353.1373')	(1377453.4486',648440.1698')
2	Line	75.97'		N30° 18' 02"E	0+53.05'	1+29.02'				(1377602.3836',648353.1373')	(1377640.7120',648418.7273')	
3	Curve	173.42'	289.50'		1+29.02'	3+02.44'	34.3213 (d)	170.84'	N47° 27' 40"E	(1377640.7120',648418.7273')	(1377766.5867',648534.2271')	(1377890.6637',648272.6642')
4	Line	67.87'		N64° 37' 19"E	3+02.44'	3+70.30'				(1377766.5867',648534.2271')	(1377827.9046',648563.3143')	
5	Curve	256.92'	266.50'		3+70.30'	6+27.23'	55.2367 (d)	247.09'	N37° 00' 13"E	(1377827.9046',648563.3143')	(1377976.6179',648760.6386')	(1377713.6851',648804.0968')
6	Line	42.52'		N9° 23' 07"E	6+27.23'	6+69.75'				(1377976.6179',648760.6386')	(1377983.5521',648802.5920')	
7	Curve	80.14'	451.50'		6+69.75'	7+49.89'	10.1696 (d)	80.03'	N14° 28' 12"E	(1377983.5521',648802.5920')	(1378003.5501',648880.0864')	(1378429.0085',648728.9659')
8	Line	214.40'		N19° 33' 17"E	7+49.89'	9+64.29'				(1378003.5501',648880.0864')	(1378075.3118',649082.1214')	

SAW CUT LINE CONTROL LEFT EDGE #4

No.	Type	Length	Radius	Direction	Start Station	End Station	Delta angle	Chord length	Chord Direction	Start Point	End Point	Center Point
1	Line	22.46'		N19° 33' 16"E	0+00.00'	0+22.46'				(1378099.6990',649150.7801')	(1378107.2153',649171.9415')	
2	Curve	121.80'	310.50'		0+22.46'	1+44.25'	22.4748 (d)	121.02'	N8° 19' 02"E	(1378107.2153',649171.9415')	(1378124.7212',649291.6859')	(1377814.6244',649275.8682')
3	Line	40.10'		N2° 55' 12"W	1+44.25'	1+84.36'				(1378124.7212',649291.6859')	(1378122.6782',649331.7373')	
4	Curve	110.07'	194.50'		1+84.36'	2+94.42'	32.4232 (d)	108.60'	N19° 07' 54"W	(1378122.6782',649331.7373')	(1378087.0846',649434.3421')	(1377928.4307',649321.8289')
5	Line	4.21'		S54° 39' 31"W	2+94.42'	2+98.63'				(1378087.0846',649434.3421')	(1378083.6523',649431.9082')	

CONSULTANT:

IOWA DEPARTMENT OF NATURAL RESOURCES

ENGINEERING SERVICES - WALLACE BUILING
502 E. 9TH ST., DES MOINES, IA 50319-0034

DEMOLITION PLAN

ROADWAY OVERLAY PROJECT FOR:

SPRINGBROOK STATE PARK

GUTHRIE COUNTY, IOWA

NO.	BY	DATE	REVISION

DRAWN BY:

CHK'D BY:

PROJECT NUMBER: 15-04-39-02

DATE: 07/01/2015

SHEET No: 9

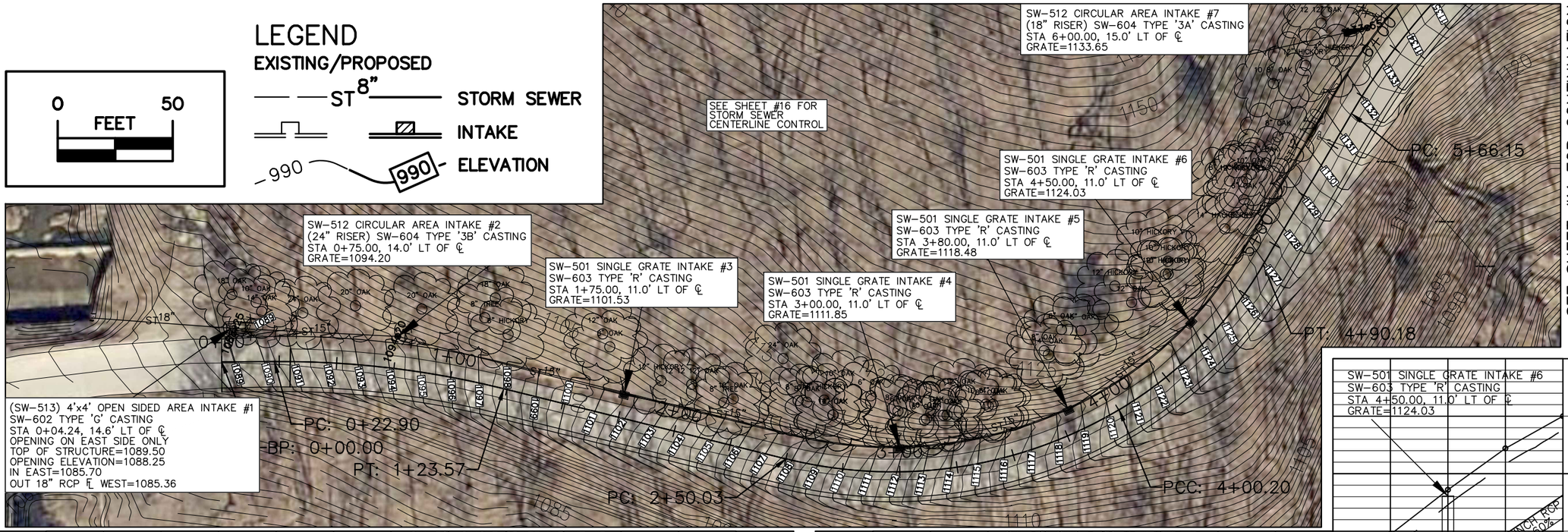

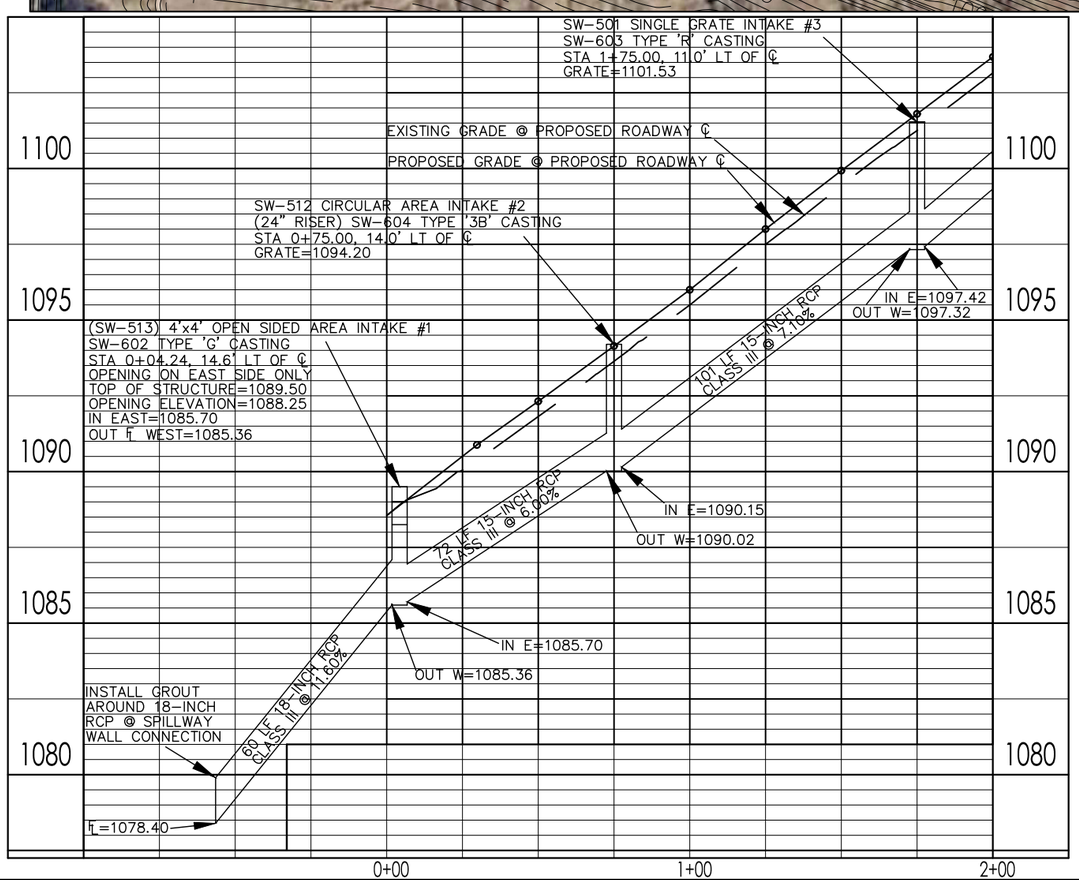

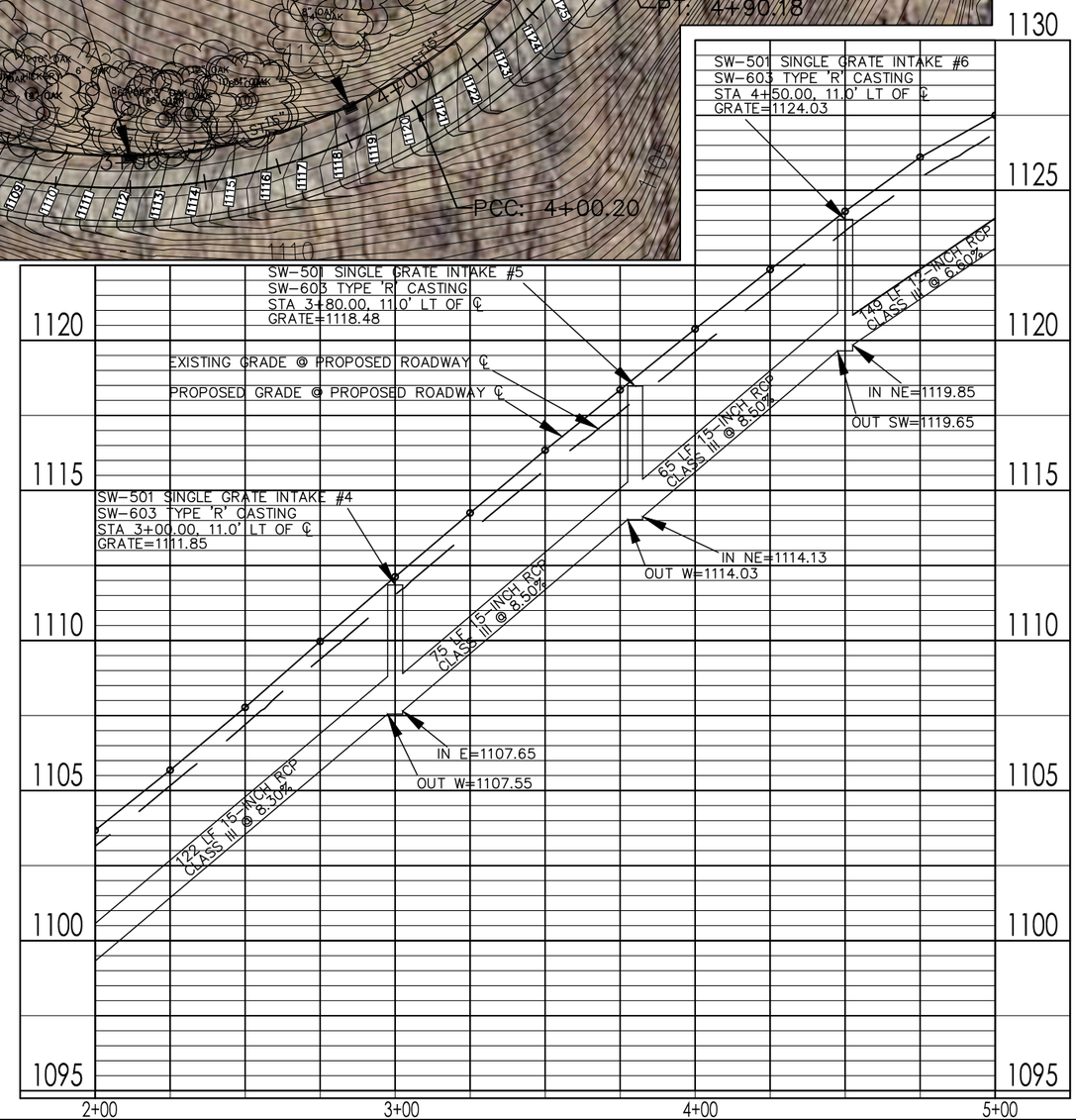

CONSULTANT:

IOWA DEPARTMENT OF NATURAL RESOURCES

ENGINEERING SERVICES - WALLACE BUILDING
502 E. 9TH ST., DES MOINES, IA 50319-0034

STORM SEWER PLAN

ROADWAY OVERLAY PROJECT FOR:

SPRINGBROOK STATE PARK

GUTHRIE COUNTY, IOWA

NO.	BY / DATE	REVISION

DRAWN BY:
PROJECT NUMBER: 15-04-39-02
CHK'D BY:
DATE: 07/01/2015
SHEET No: 10

LEGEND

EXISTING/PROPOSED

- ST 8" — STORM SEWER
- INTAKE
- 990 — 990 — ELEVATION

0 FEET 50

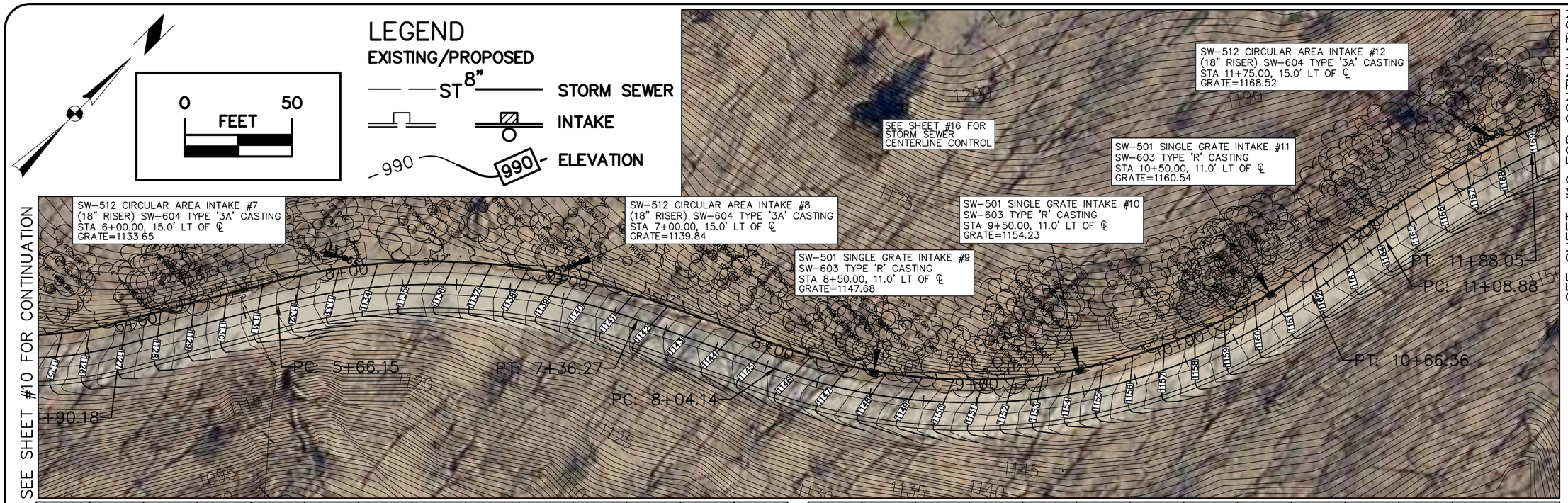

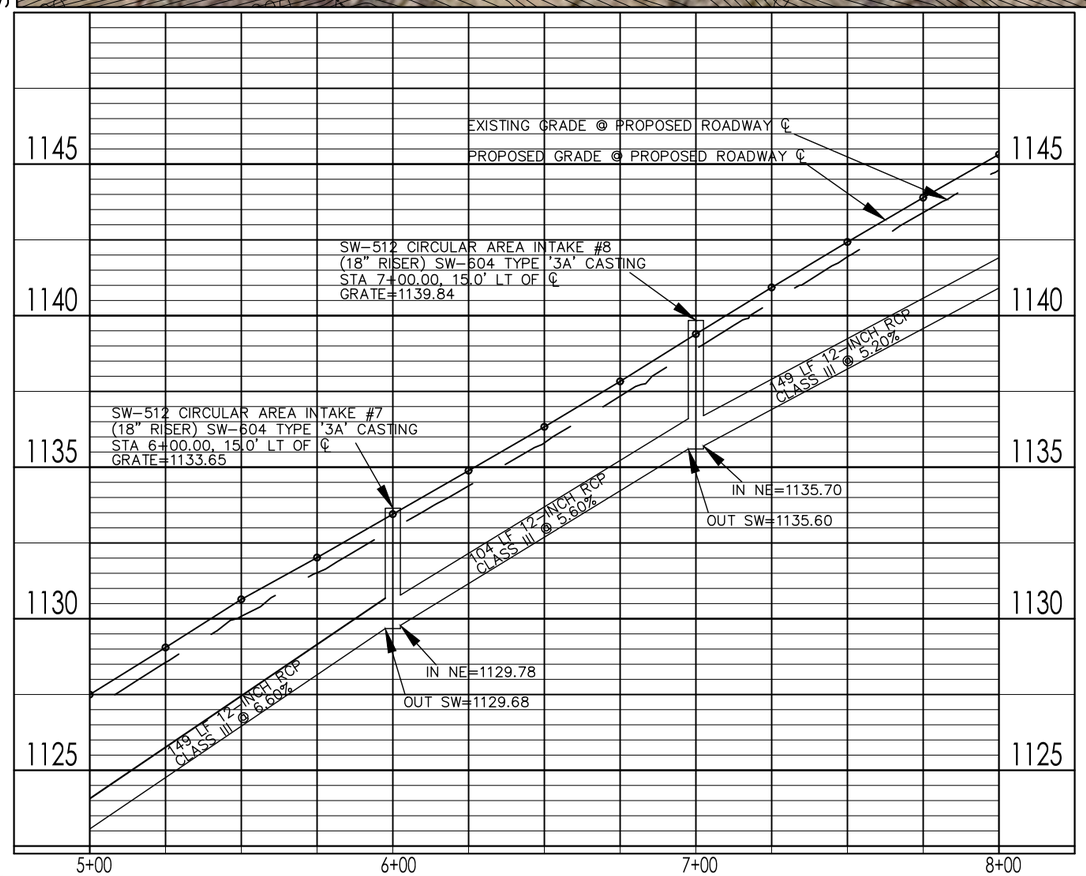

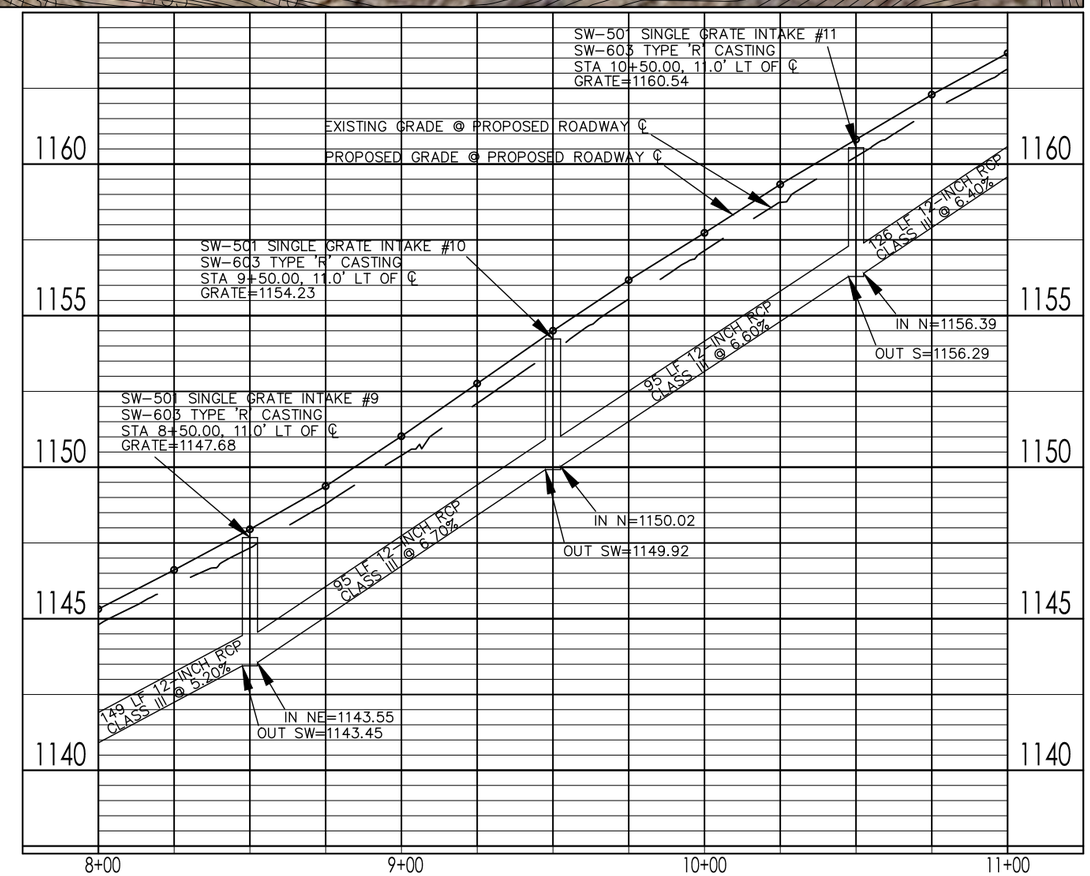

CONSULTANT:

IOWA DEPARTMENT OF NATURAL RESOURCES

ENGINEERING SERVICES - WALLACE BUILDING
502 E. 9TH ST., DES MOINES, IA 50319-0034

STORM SEWER PLAN

ROADWAY OVERLAY PROJECT FOR:

SPRINGBROOK STATE PARK

GUTHRIE COUNTY, IOWA

NO.	BY DATE	REVISION

DRAWN BY: | PROJECT NUMBER: 15-04-39-02

CHK'D BY: | DATE: 07/01/2015

SHEET No: 11

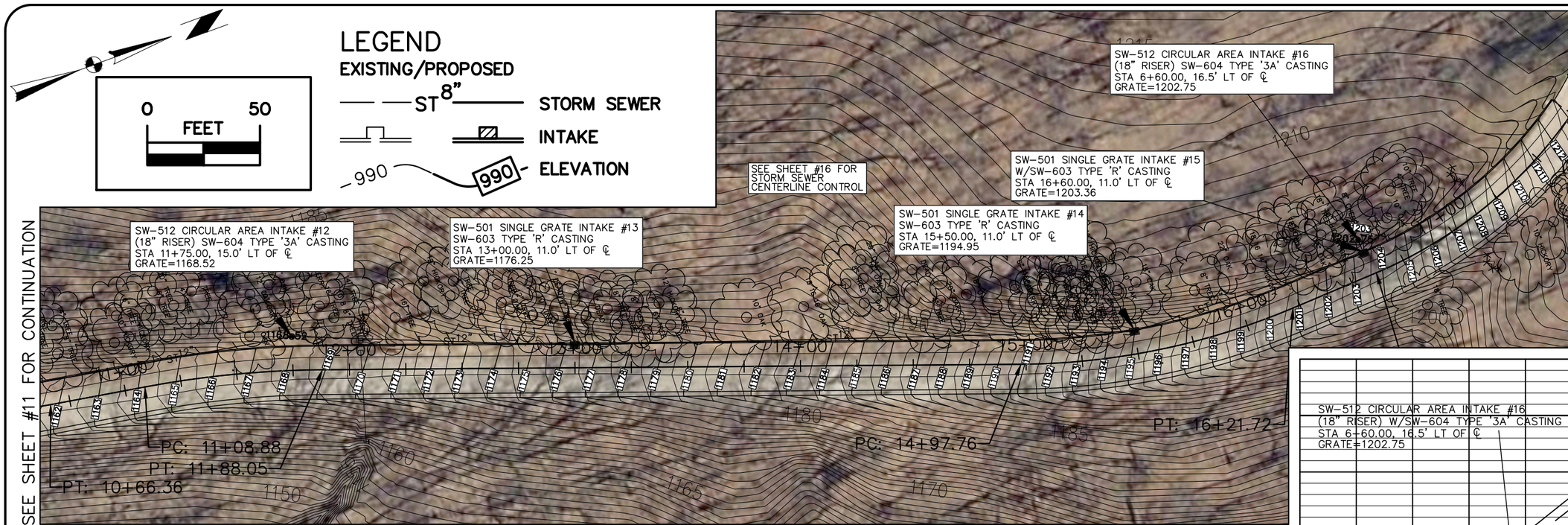

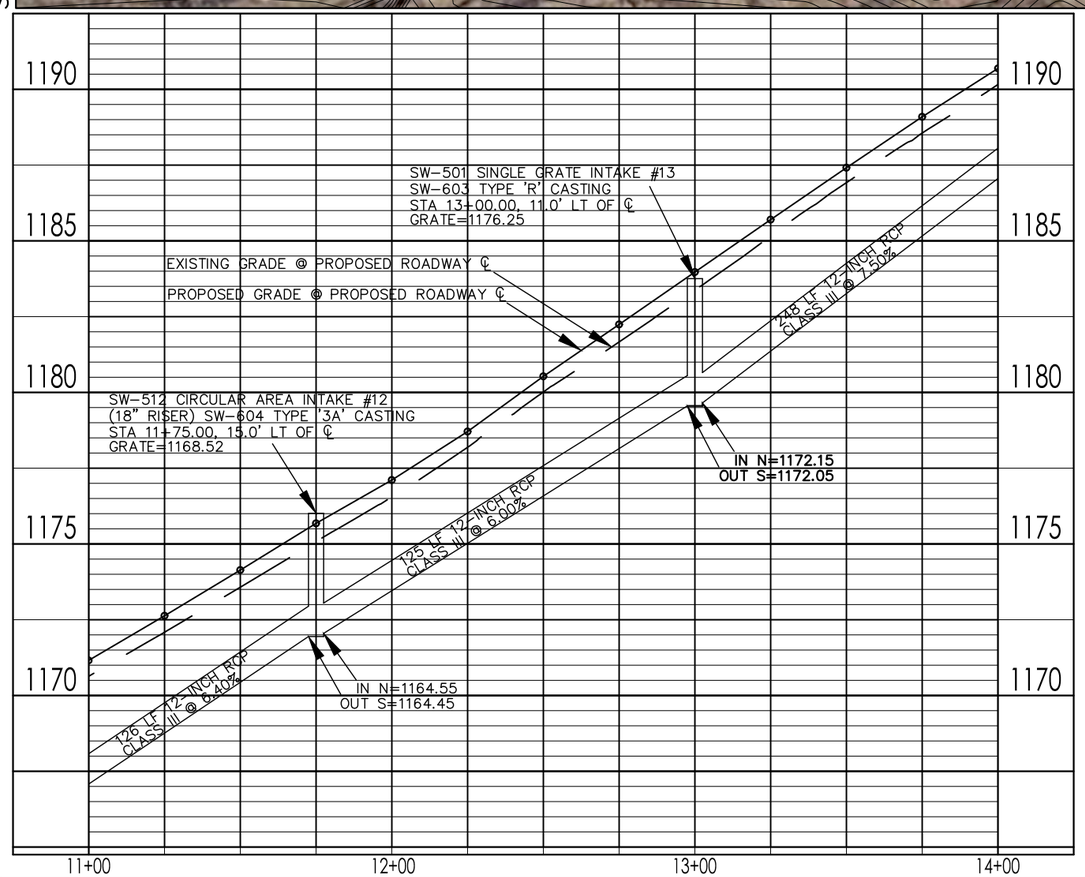

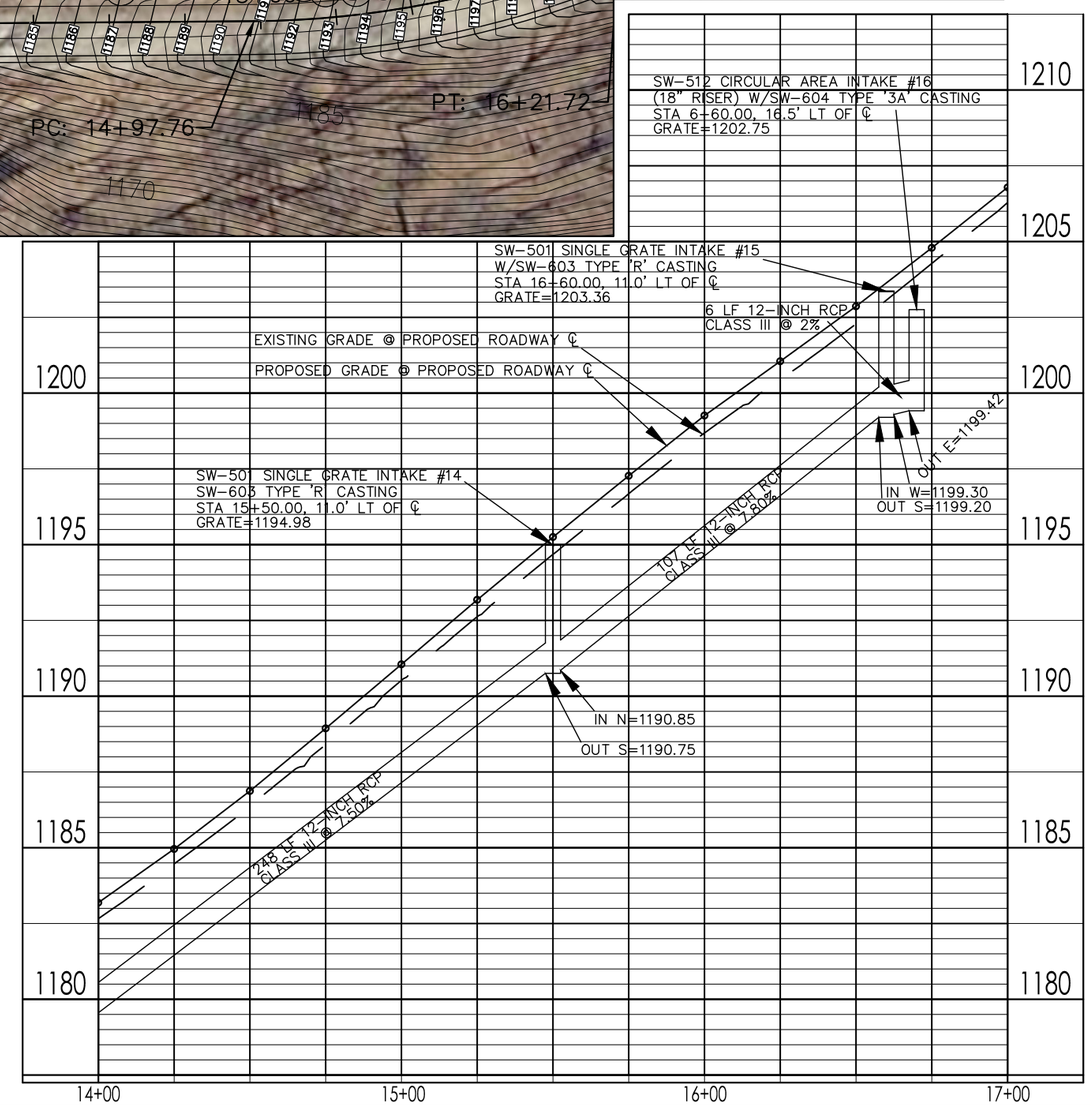

CONSULTANT:

IOWA DEPARTMENT OF NATURAL RESOURCES

ENGINEERING SERVICES - WALLACE BUILDING
502 E. 9TH ST., DES MOINES, IA 50319-0034

STORM SEWER PLAN

ROADWAY OVERLAY PROJECT FOR:

SPRINGBROOK STATE PARK

GUTHRIE COUNTY, IOWA

NO.	BY / DATE	REVISION

DRAWN BY:
PROJECT NUMBER: 15-04-39-02
CHK'D BY:
DATE: 07/01/2015
SHEET No: 12

LEGEND

EXISTING/PROPOSED

- ST 8" — STORM SEWER
- INTAKE
- 990 — 990 — ELEVATION

0 FEET 50

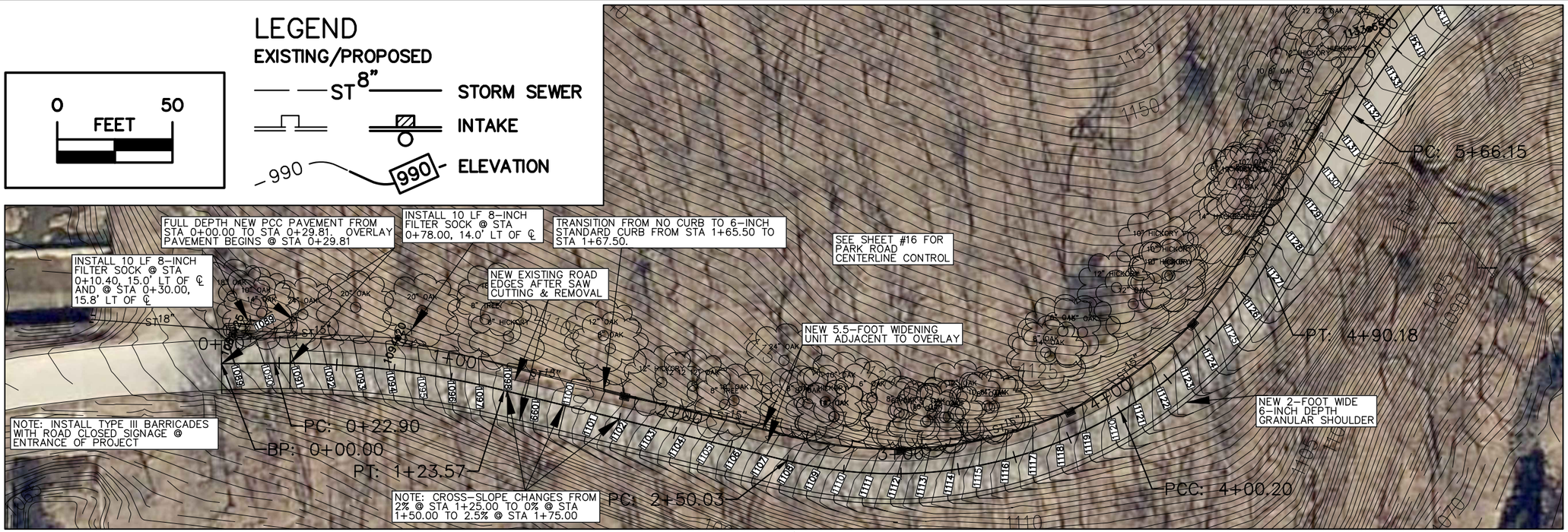

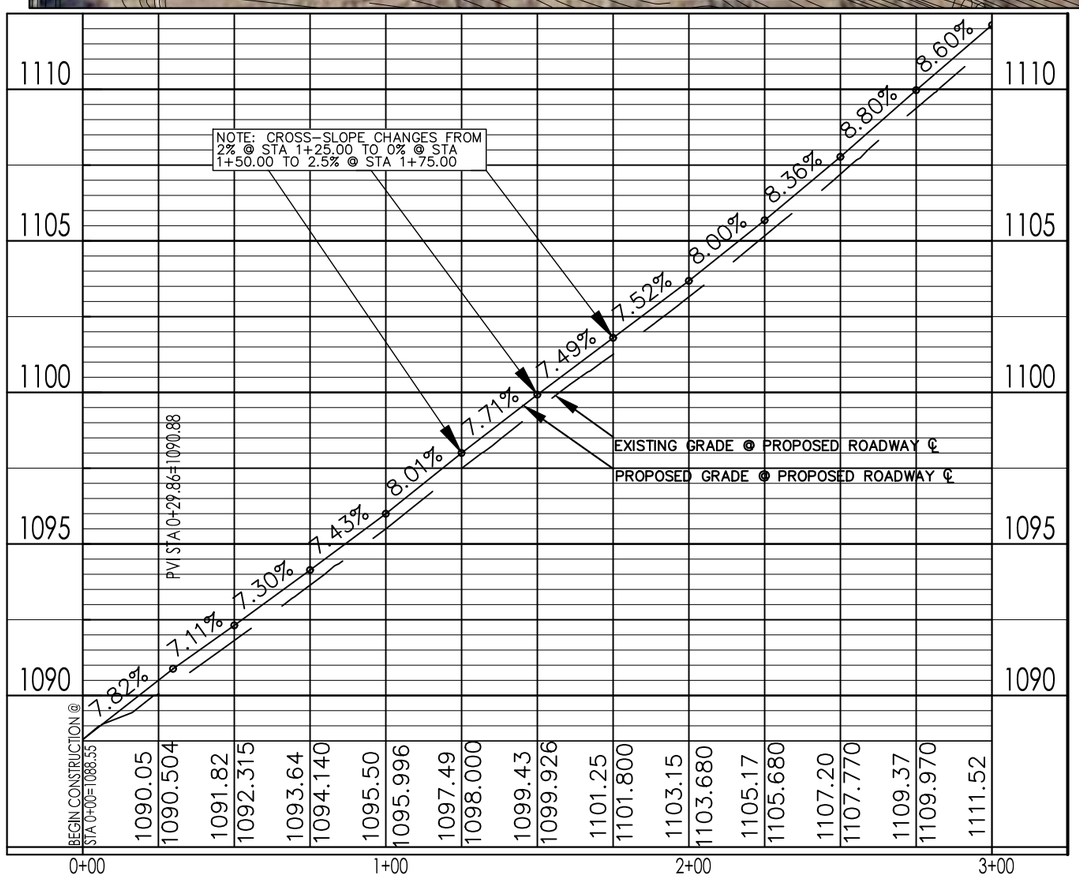

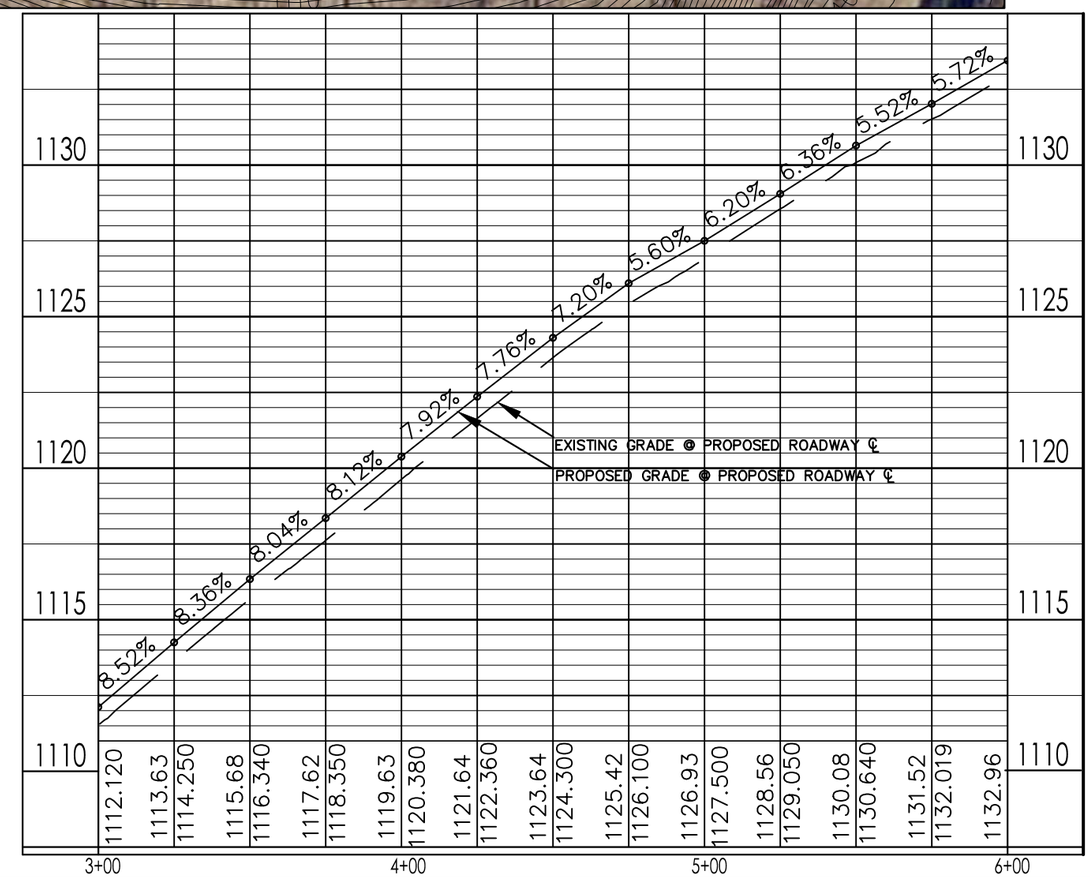

CONSULTANT:

IOWA DEPARTMENT OF NATURAL RESOURCES

ENGINEERING SERVICES - WALLACE BUILDING
502 E. 9TH ST., DES MOINES, IA 50319-0034

PLAN/PROFILE SHEET

ROADWAY OVERLAY PROJECT FOR:

SPRINGBROOK STATE PARK

GUTHRIE COUNTY, IOWA

NO.	BY DATE	REVISION

DRAWN BY: PROJECT NUMBER: 15-04-39-02

CHK'D BY: DATE: 07/01/2015

SHEET No: 13

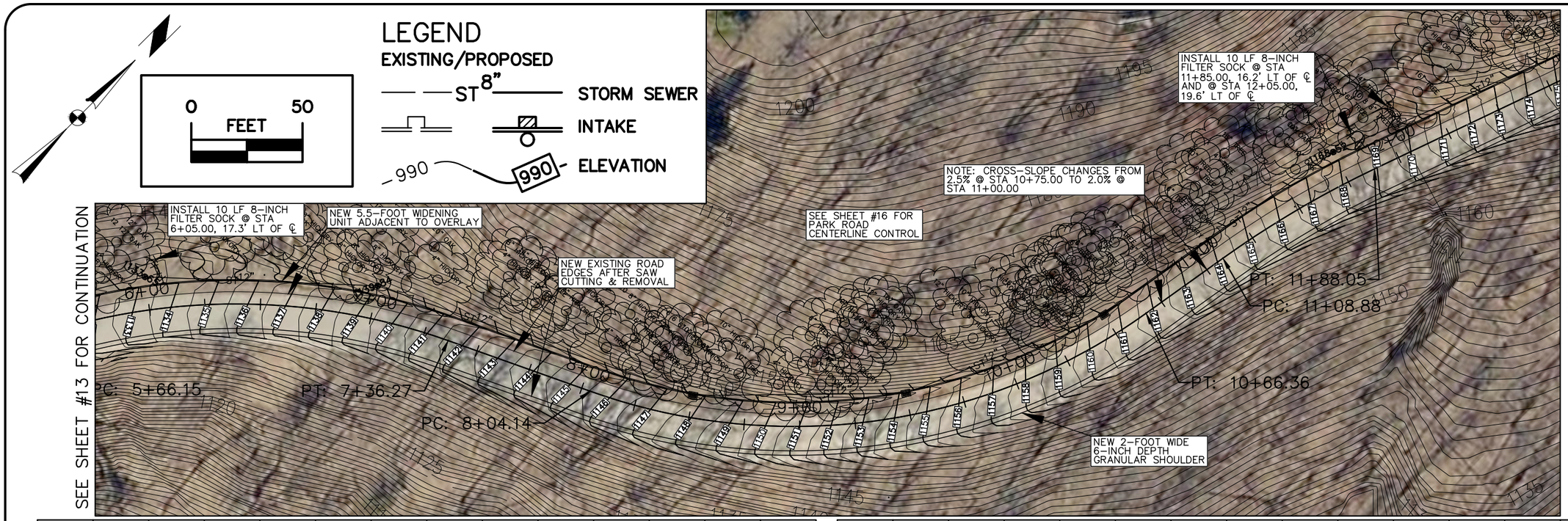

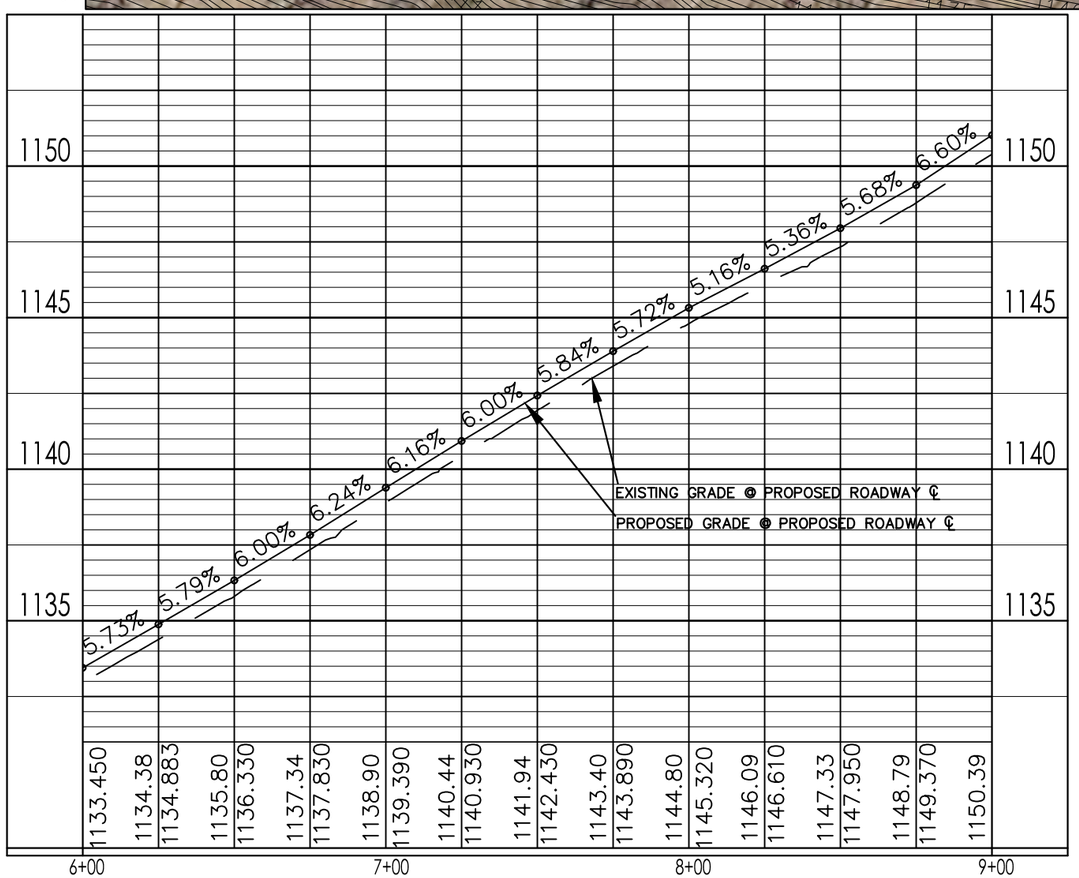

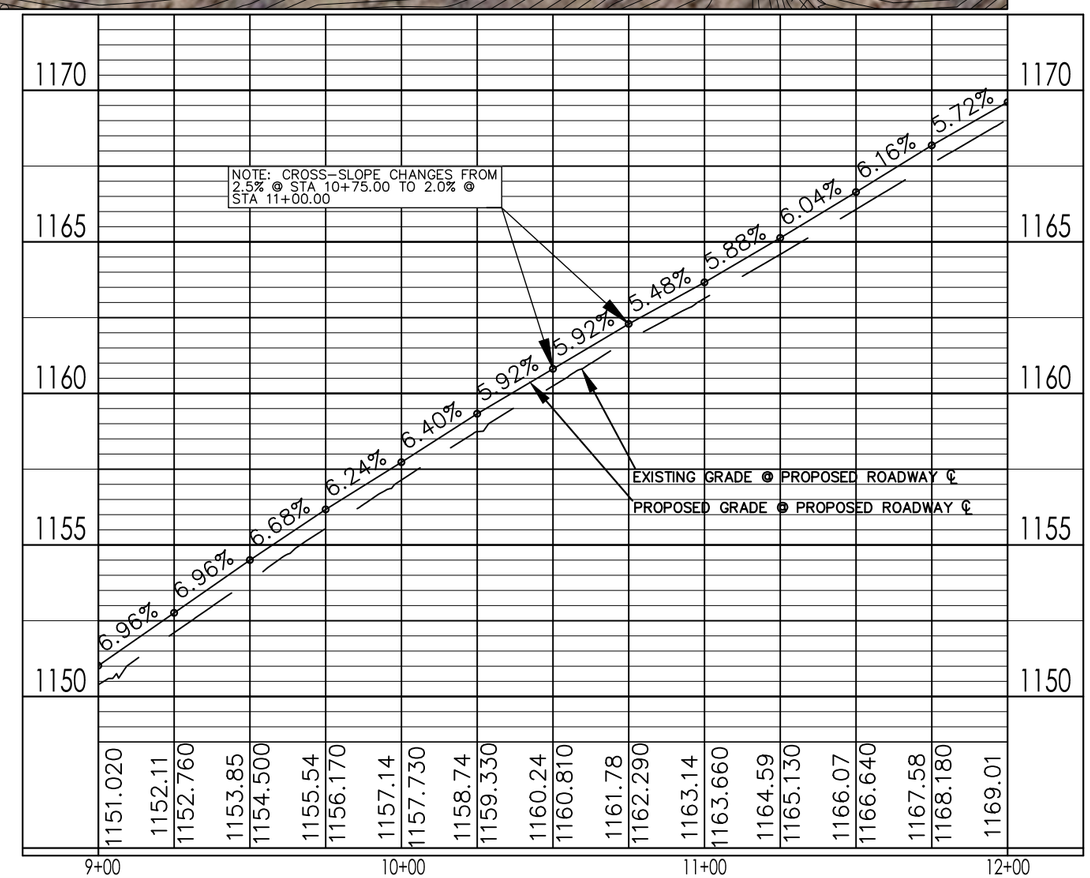

CONSULTANT:

IOWA DEPARTMENT OF NATURAL RESOURCES

ENGINEERING SERVICES - WALLACE BUILING
502 E. 9TH ST., DES MOINES, IA 50319-0034

PLAN/PROFILE SHEET

ROADWAY OVERLAY PROJECT FOR:

SPRINGBROOK STATE PARK

GUTHRIE COUNTY, IOWA

NO.	BY DATE	REVISION

DRAWN BY:
PROJECT NUMBER: 15-04-39-02
CHK'D BY:
DATE: 07/01/2015
SHEET No: 14

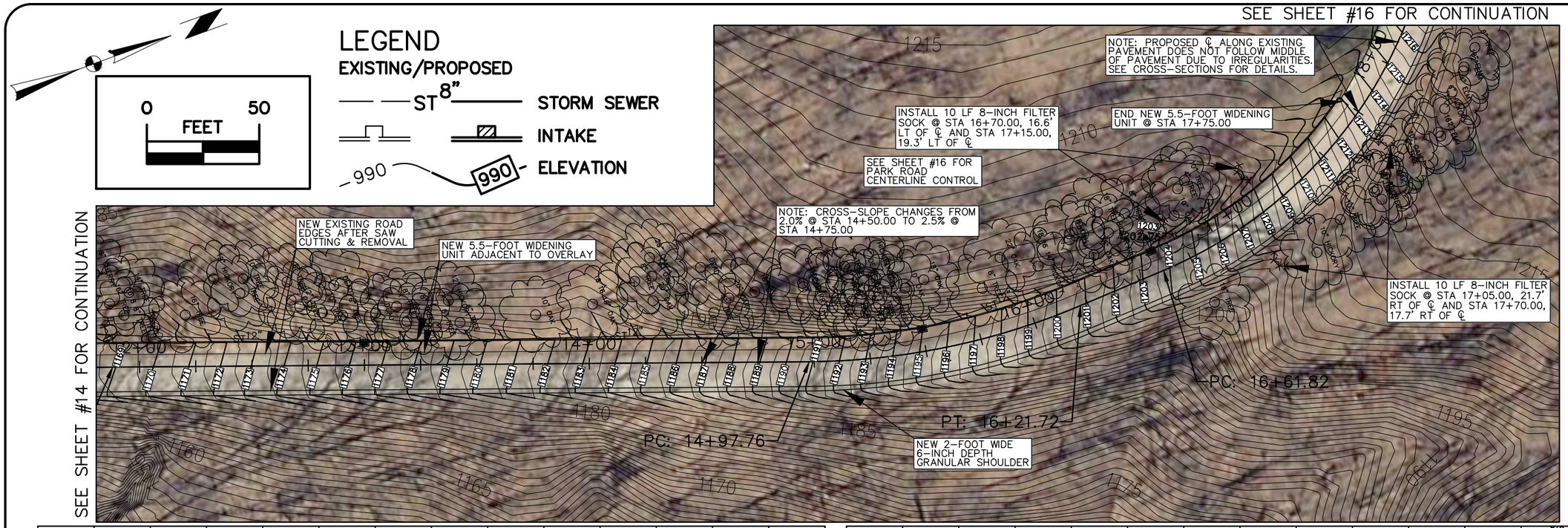

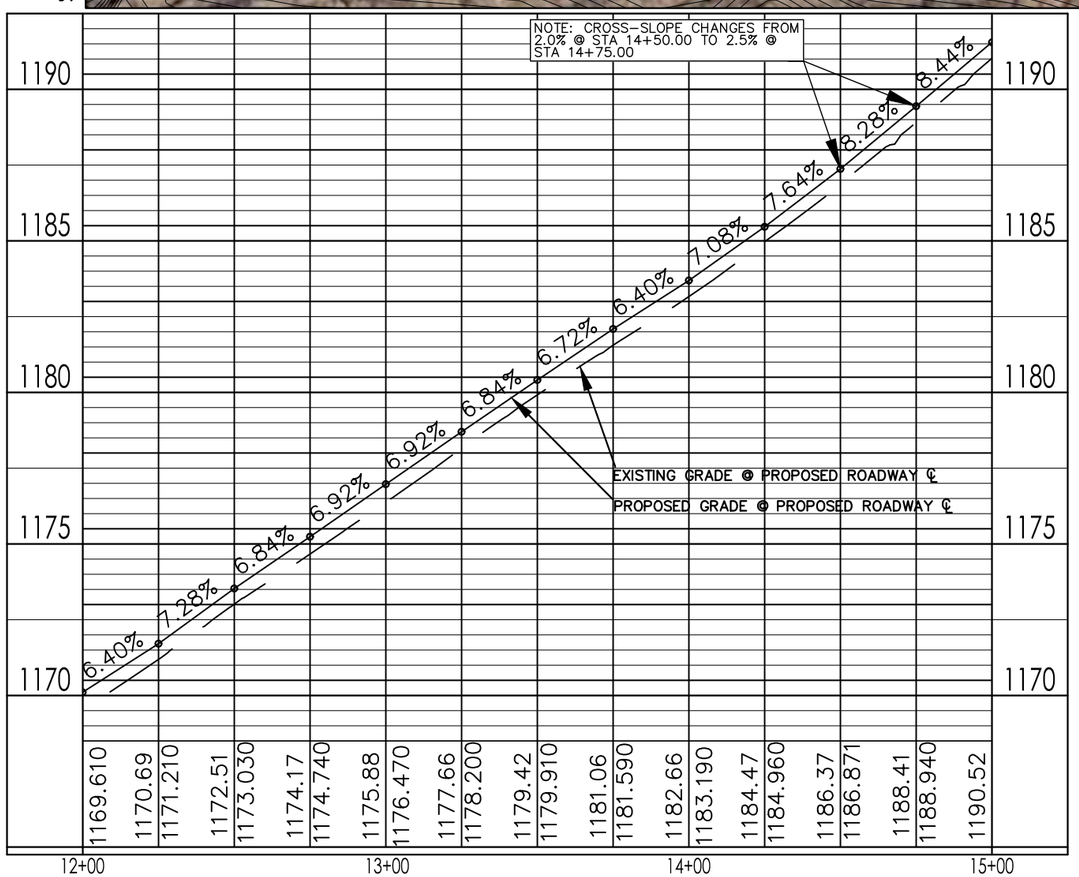

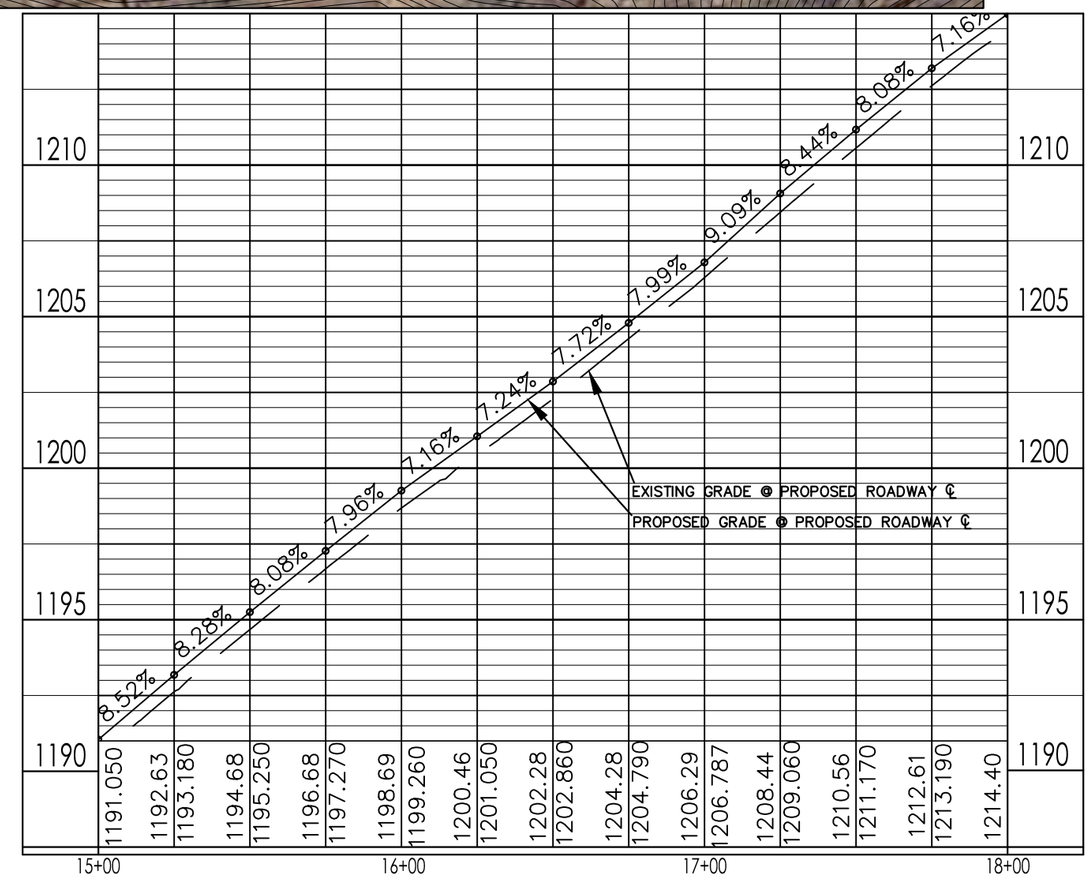

CONSULTANT:

IOWA DEPARTMENT OF NATURAL RESOURCES

ENGINEERING SERVICES - WALLACE BUILDING
502 E. 9TH ST., DES MOINES, IA 50319-0034

PLAN/PROFILE SHEET

ROADWAY OVERLAY PROJECT FOR:

SPRINGBROOK STATE PARK

GUTHRIE COUNTY, IOWA

NO.	BY DATE	REVISION

DRAWN BY: PROJECT NUMBER: 15-04-39-02

CHK'D BY: DATE: 07/01/2015

SHEET No: 15

PARK ROAD CENTERLINE CONTROL

No.	Type	Length	Radius	Direction	Start Station	End Station	Delta angle	Chord length	Chord Direction	Start Point	End Point	Center Point
1	Line	22.90'		N89° 32' 23"E	0+00.00'	0+22.90'				(1377154.2650',648307.9447')	(1377177.1603',648308.1286')	
2	Curve	100.67'	400.00'		0+22.90'	1+23.57'	14.4204 (d)	100.41'	S83° 15' 00"E	(1377177.1603',648308.1286')	(1377276.8720',648296.3269')	(1377180.3730',647908.1415')
3	Line	126.46'		S76° 02' 23"E	1+23.57'	2+50.03'				(1377276.8720',648296.3269')	(1377399.5974',648265.8186')	
4	Curve	150.17'	192.50'		2+50.03'	4+00.20'	44.6976 (d)	146.39'	N81° 36' 41"E	(1377399.5974',648265.8186')	(1377544.4252',648287.1756')	(1377446.0375',648452.6329')
5	Curve	89.98'	178.00'		4+00.20'	4+90.18'	28.9620 (d)	89.02'	N44° 46' 54"E	(1377544.4252',648287.1756')	(1377607.1321',648350.3625')	(1377453.4486',648440.1699')
6	Line	75.97'		N30° 18' 02"E	4+90.18'	5+66.15'				(1377607.1321',648350.3625')	(1377645.4606',648415.9524')	
7	Curve	170.12'	284.00'		5+66.15'	7+36.27'	34.3213 (d)	167.59'	N47° 27' 40"E	(1377645.4606',648415.9524')	(1377768.9438',648529.2580')	(1377890.6636',648272.6643')
8	Line	67.87'		N64° 37' 19"E	7+36.27'	8+04.14'				(1377768.9438',648529.2580')	(1377830.2617',648558.3452')	
9	Curve	262.22'	272.00'		8+04.14'	10+66.36'	55.2367 (d)	252.19'	N37° 00' 13"E	(1377830.2617',648558.3452')	(1377982.0442',648759.7418')	(1377713.6851',648804.0969')
10	Line	42.52'		N9° 23' 07"E	10+66.36'	11+08.88'				(1377982.0442',648759.7418')	(1377988.9784',648801.6952')	
11	Curve	79.16'	446.00'		11+08.88'	11+88.05'	10.1696 (d)	79.06'	N14° 28' 12"E	(1377988.9784',648801.6952')	(1378008.7328',648878.2456')	(1378429.0084',648728.9660')
12	Line	309.72'		N19° 33' 17"E	11+88.05'	14+97.76'				(1378008.7328',648878.2456')	(1378112.3981',649170.1006')	
13	Curve	123.95'	316.00'		14+97.76'	16+21.72'	22.4748 (d)	123.16'	N8° 19' 02"E	(1378112.3981',649170.1006')	(1378130.2141',649291.9661')	(1377814.6244',649275.8682')
14	Line	40.10'		N2° 55' 12"W	16+21.72'	16+61.82'				(1378130.2141',649291.9661')	(1378128.1711',649332.0175')	
15	Curve	199.45'	200.00'		16+61.82'	18+61.27'	57.1388 (d)	191.29'	N31° 29' 22"W	(1378128.1711',649332.0175')	(1378028.2528',649495.1366')	(1377928.4308',649321.8289')

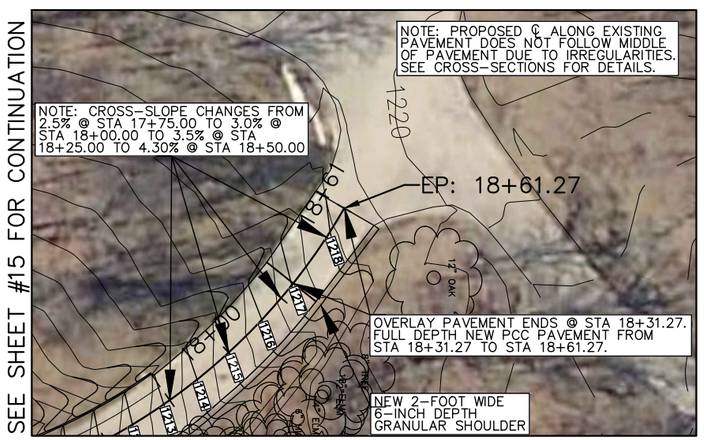

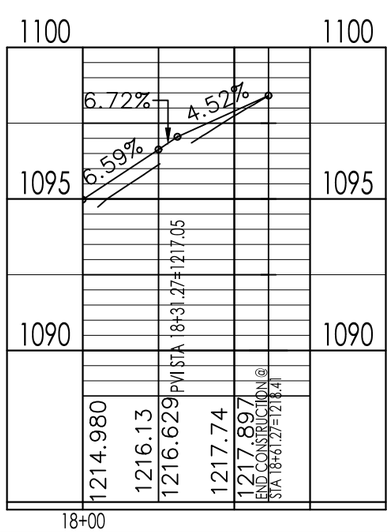

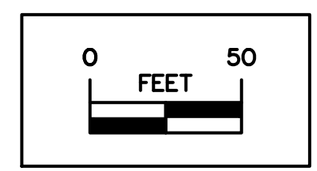

LEGEND

EXISTING/PROPOSED

- ST 8" — STORM SEWER
- INTAKE
- 990 — 990 — ELEVATION

STORM SEWER CENTERLINE CONTROL (CENTER OF STRUCTURES)

No.	Type	Length	Direction	Start Station	End Station	Start Point	End Point
1	Line	60.69'	S85° 46' 07"E	0+00.00'	0+60.69'	(1377097.8670',648327.0960') SPILLWAY	(1377158.3905',648322.6180') INTAKE #1
2	Line	72.54'	S87° 10' 57"E	0+60.69'	1+33.23'	(1377158.3905',648322.6180') INTAKE #1	(1377230.8464',648319.0521') INTAKE #2
3	Line	101.59'	S75° 30' 14"E	1+33.23'	2+34.82'	(1377230.8464',648319.0521') INTAKE #2	(1377329.1975',648293.6237') INTAKE #3
4	Line	122.03'	S78° 54' 43"E	2+34.82'	3+56.84'	(1377329.1975',648293.6237') INTAKE #3	(1377448.9459',648270.1561') INTAKE #4
5	Line	75.30'	N77° 10' 52"E	3+56.84'	4+32.15'	(1377448.9459',648270.1561') INTAKE #4	(1377522.3706',648286.8631') INTAKE #5
6	Line	65.74'	N54° 26' 22"E	4+32.15'	4+97.88'	(1377522.3706',648286.8631') INTAKE #5	(1377575.8461',648325.0923') INTAKE #6
7	Line	149.14'	N30° 49' 56"E	4+97.88'	6+47.02'	(1377575.8461',648325.0923') INTAKE #6	(1377652.2822',648453.1505') INTAKE #7
8	Line	104.74'	N47° 13' 04"E	6+47.02'	7+51.76'	(1377652.2822',648453.1505') INTAKE #7	(1377729.1548',648524.2908') INTAKE #8
9	Line	149.95'	N64° 10' 48"E	7+51.76'	9+01.71'	(1377729.1548',648524.2908') INTAKE #8	(1377864.1370',648589.6016') INTAKE #9
10	Line	95.75'	N44° 25' 29"E	9+01.71'	9+97.46'	(1377864.1370',648589.6016') INTAKE #9	(1377931.1584',648657.9827') INTAKE #10
11	Line	95.78'	N23° 21' 49"E	9+97.46'	10+93.24'	(1377931.1584',648657.9827') INTAKE #10	(1377969.1423',648745.9111') INTAKE #11
12	Line	126.36'	N9° 37' 32"E	10+93.24'	12+19.60'	(1377969.1423',648745.9111') INTAKE #11	(1377990.2713',648870.4958') INTAKE #12
13	Line	125.53'	N21° 44' 51"E	12+19.60'	13+45.13'	(1377990.2713',648870.4958') INTAKE #12	(1378036.7817',648987.0902') INTAKE #13
14	Line	248.15'	N18° 35' 30"E	13+45.13'	15+93.28'	(1378036.7817',648987.0902') INTAKE #13	(1378115.8977',649222.2924') INTAKE #14
15	Line	107.43'	N1° 16' 08"E	15+93.28'	17+00.71'	(1378115.8977',649222.2924') INTAKE #14	(1378118.2766',649329.6931') INTAKE #15
16	Line	6.50'	S87° 04' 48"W	17+00.71'	17+07.21'	(1378118.2766',649329.6931') INTAKE #15	(1378111.7844',649329.3619') INTAKE #16

CONSULTANT:

IOWA DEPARTMENT OF NATURAL RESOURCES
ENGINEERING SERVICES - WALLACE BUILDING
502 E. 9TH ST., DES MOINES, IA 50319-0034

PLAN/PROFILE CONTROL SHEET

ROADWAY OVERLAY PROJECT FOR:

SPRINGBROOK STATE PARK

GUTHRIE COUNTY, IOWA

NO.	BY	DATE	REVISION

DRAWN BY:
PROJECT NUMBER: 15-04-39-02
CHK'D BY:
DATE: 07/01/2015

SHEET No: 16

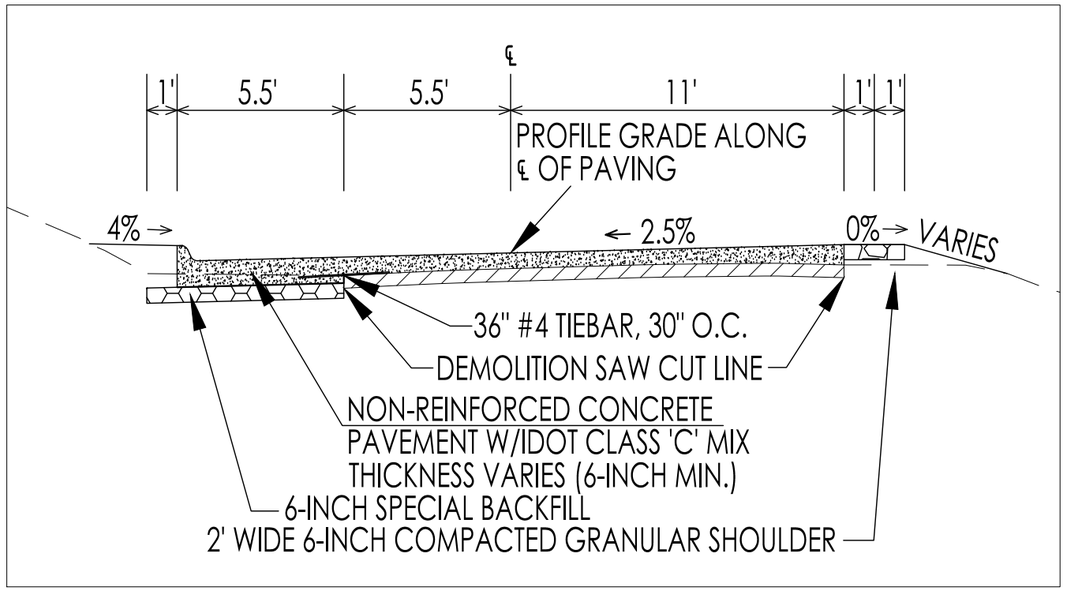

TYPICAL CROSS–SECTION

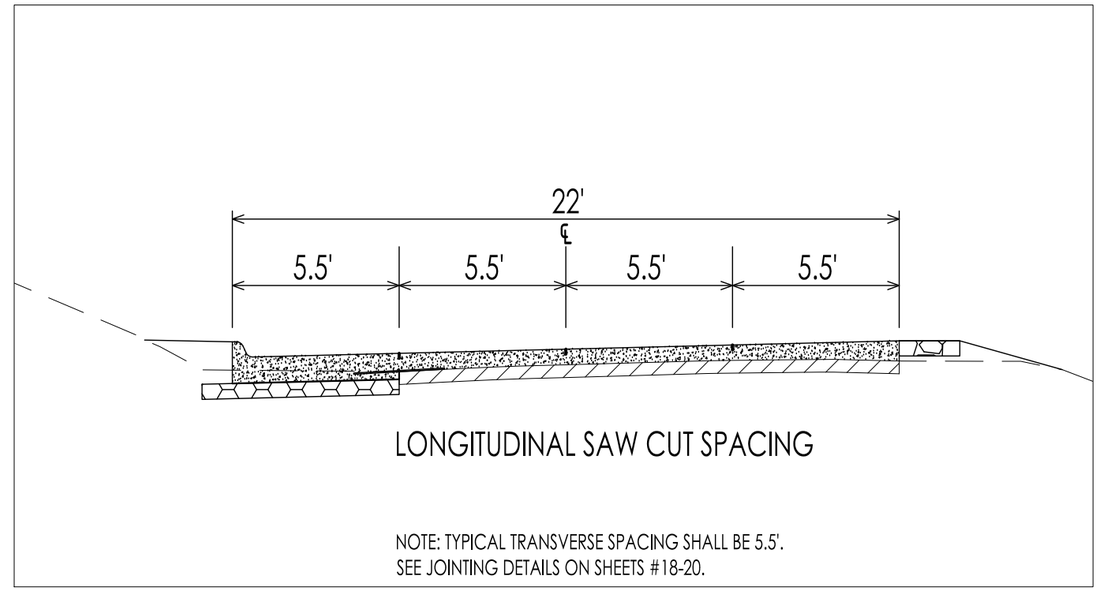

TYPICAL JOINT SPACING

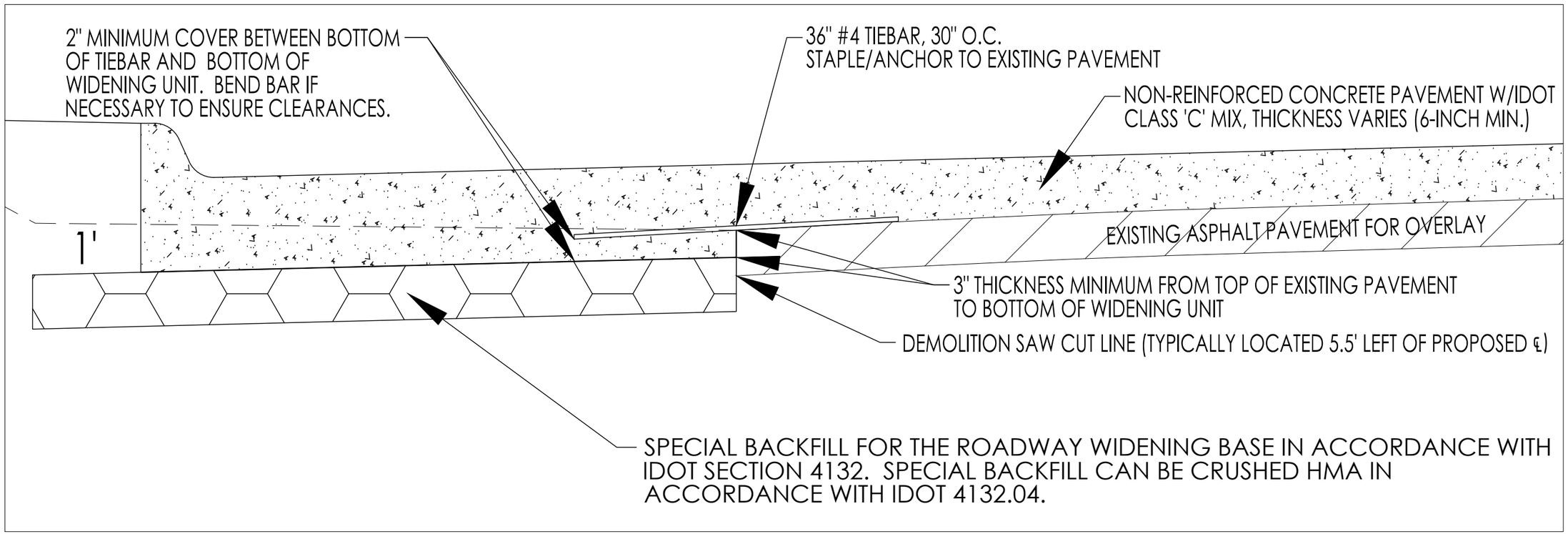

TYPICAL 5.5' WIDENING UNIT DETAIL

CONSULTANT:

IOWA DEPARTMENT OF NATURAL RESOURCES

ENGINEERING SERVICES - WALLACE BUILING
502 E. 9TH ST., DES MOINES, IA 50319-0034

STANDARD DETAIL SHEET

ROADWAY OVERLAY PROJECT FOR:

SPRINGBROOK STATE PARK

GUTHRIE COUNTY, IOWA

NO.	BY DATE	REVISION

DRAWN BY: PROJECT NUMBER: 15–04–39–02

CHK'D BY: DATE: 07/01/2015

SHEET No: 17

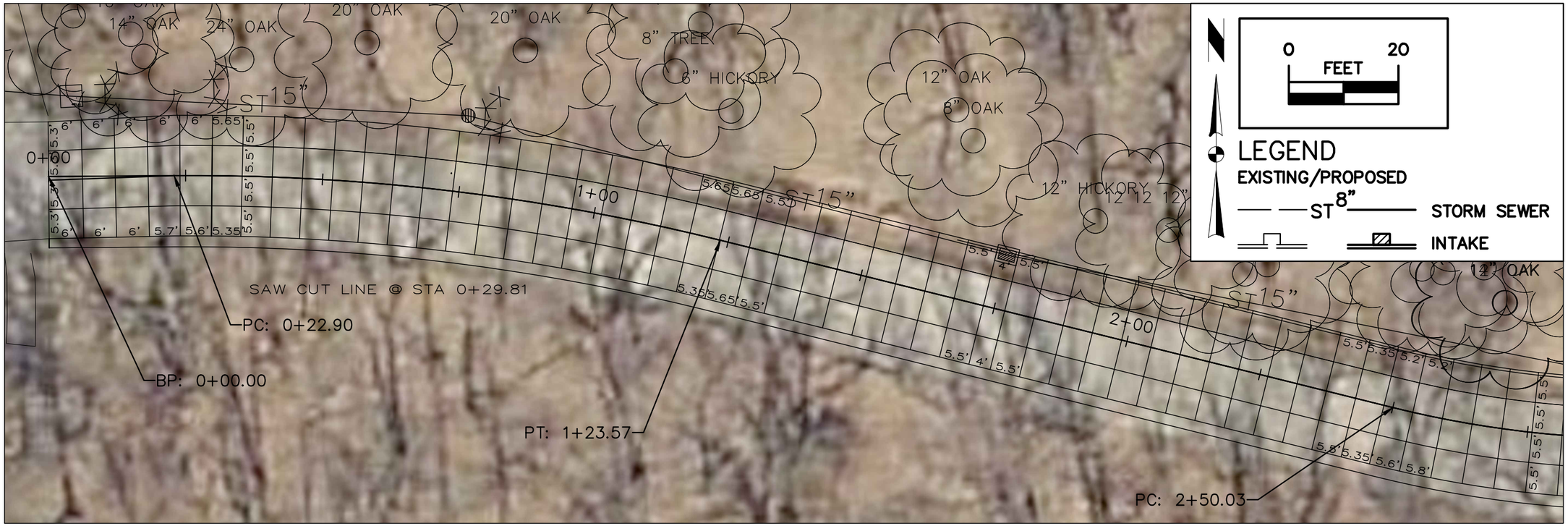

SEE ABOVE FOR CONTINUATION

SEE BELOW FOR CONTINUATION

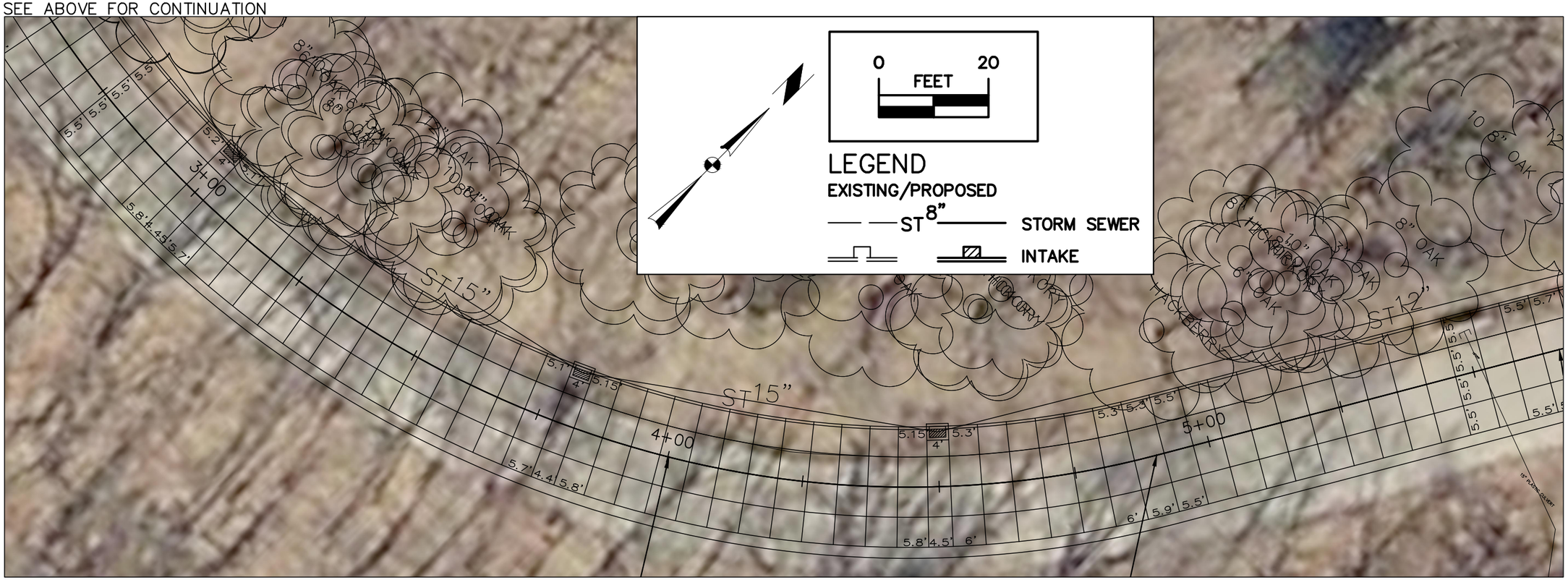

SEE SHEET #19 FOR CONTINUATION

CONSULTANT:

IOWA DEPARTMENT OF NATURAL RESOURCES

ENGINEERING SERVICES - WALLACE BUILDING
502 E. 9TH ST., DES MOINES, IA 50319-0034

JOINTING DETAILS

ROADWAY OVERLAY PROJECT FOR:

SPRINGBROOK STATE PARK

GUTHRIE COUNTY, IOWA

NO.	BY DATE	REVISION

DRAWN BY:
PROJECT NUMBER: 15-04-39-02
CHK'D BY:
DATE: 07/01/2015

SHEET No: 18

SEE SHEET #18 FOR CONTINUATION

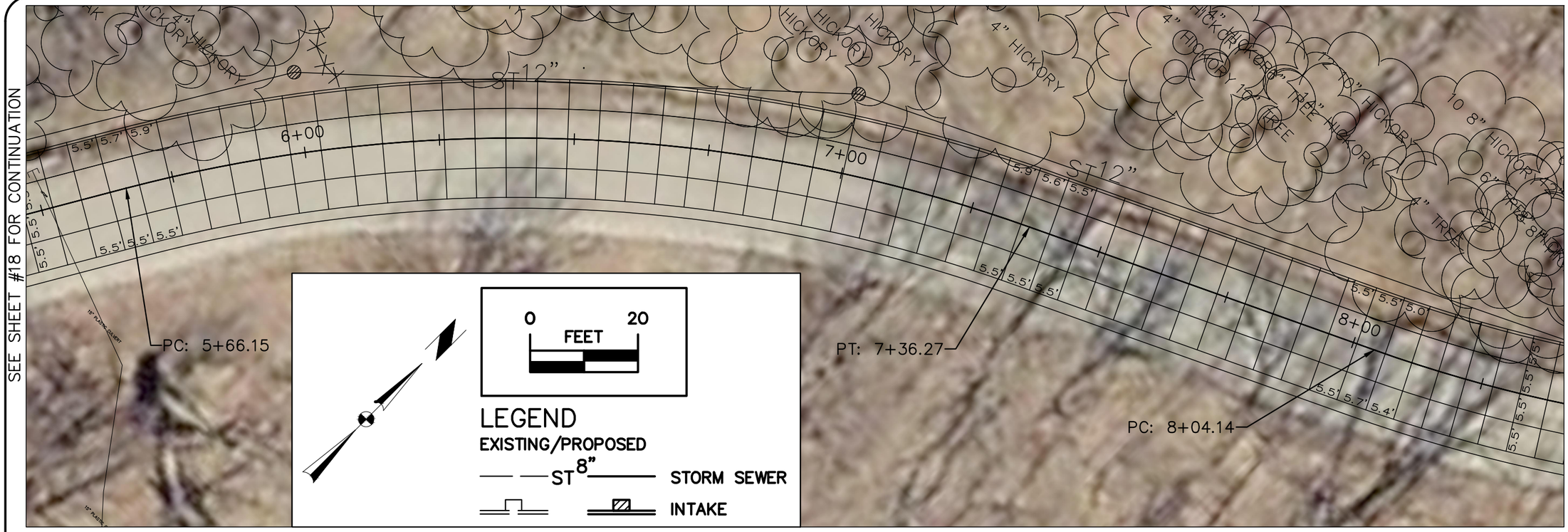

SEE BELOW FOR CONTINUATION

SEE ABOVE FOR CONTINUATION

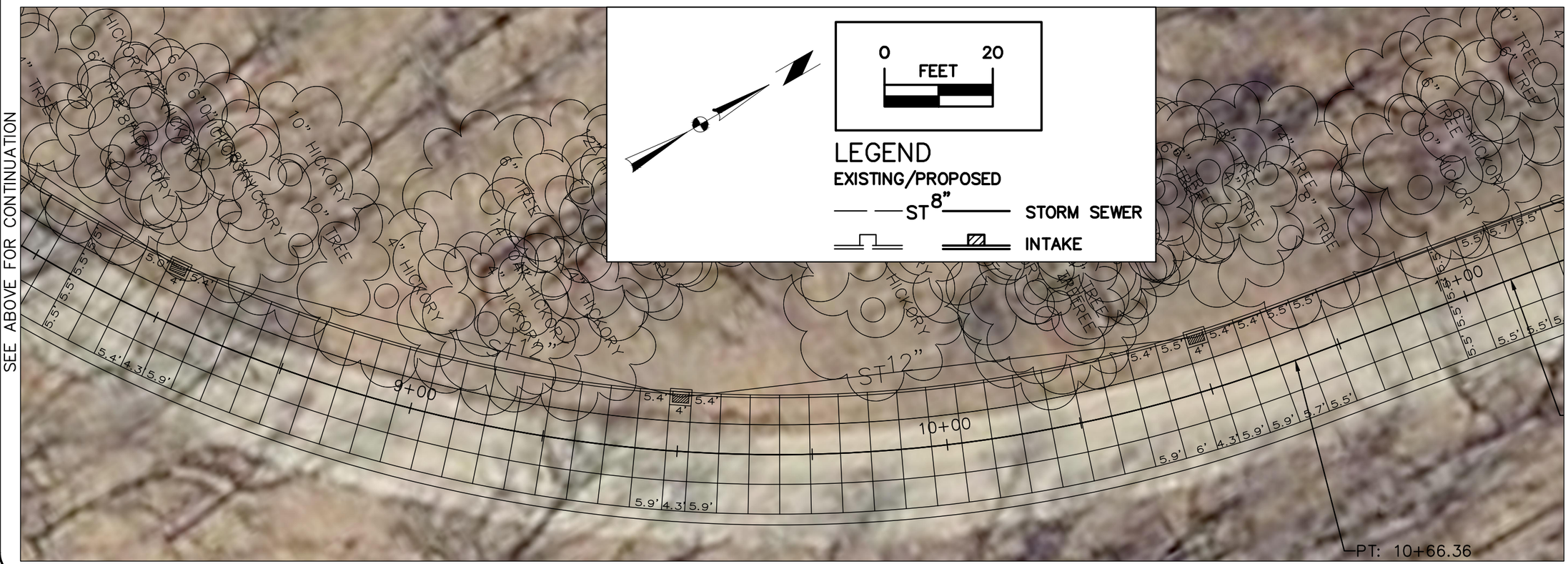

SEE SHEET #20 FOR CONTINUATION

CONSULTANT:

IOWA DEPARTMENT OF NATURAL RESOURCES

ENGINEERING SERVICES - WALLACE BUILDING
502 E. 9TH ST., DES MOINES, IA 50319-0034

JOINTING DETAILS

ROADWAY OVERLAY PROJECT FOR:

SPRINGBROOK STATE PARK

NO.	BY DATE	REVISION

DRAWN BY: PROJECT NUMBER: 15-04-39-0

CHK'D BY: DATE: 07/01/2015

SHEET No: 19

SEE SHEET #19 FOR CONTINUATION

SEE BELOW FOR CONTINUATION

0 FEET 20

LEGEND

EXISTING/PROPOSED

ST 8" STORM SEWER

INTAKE

SEE ABOVE FOR CONTINUATION

SEE SHEET #21 FOR CONTINUATION

0 FEET 20

LEGEND

EXISTING/PROPOSED

ST 8" STORM SEWER

INTAKE

CONSULTANT:

IOWA DEPARTMENT OF NATURAL RESOURCES

ENGINEERING SERVICES - WALLACE BUILDING
502 E. 9TH ST., DES MOINES, IA 50319-0034

DNR

JOINTING DETAILS

ROADWAY OVERLAY PROJECT FOR:

SPRINGBROOK STATE PARK

GUTHRIE COUNTY, IOWA

NO.	BY DATE	REVISION

DRAWN BY:

CHK'D BY:

PROJECT NUMBER: 15-04-39-02

DATE: 07/01/2015

SHEET No: 20

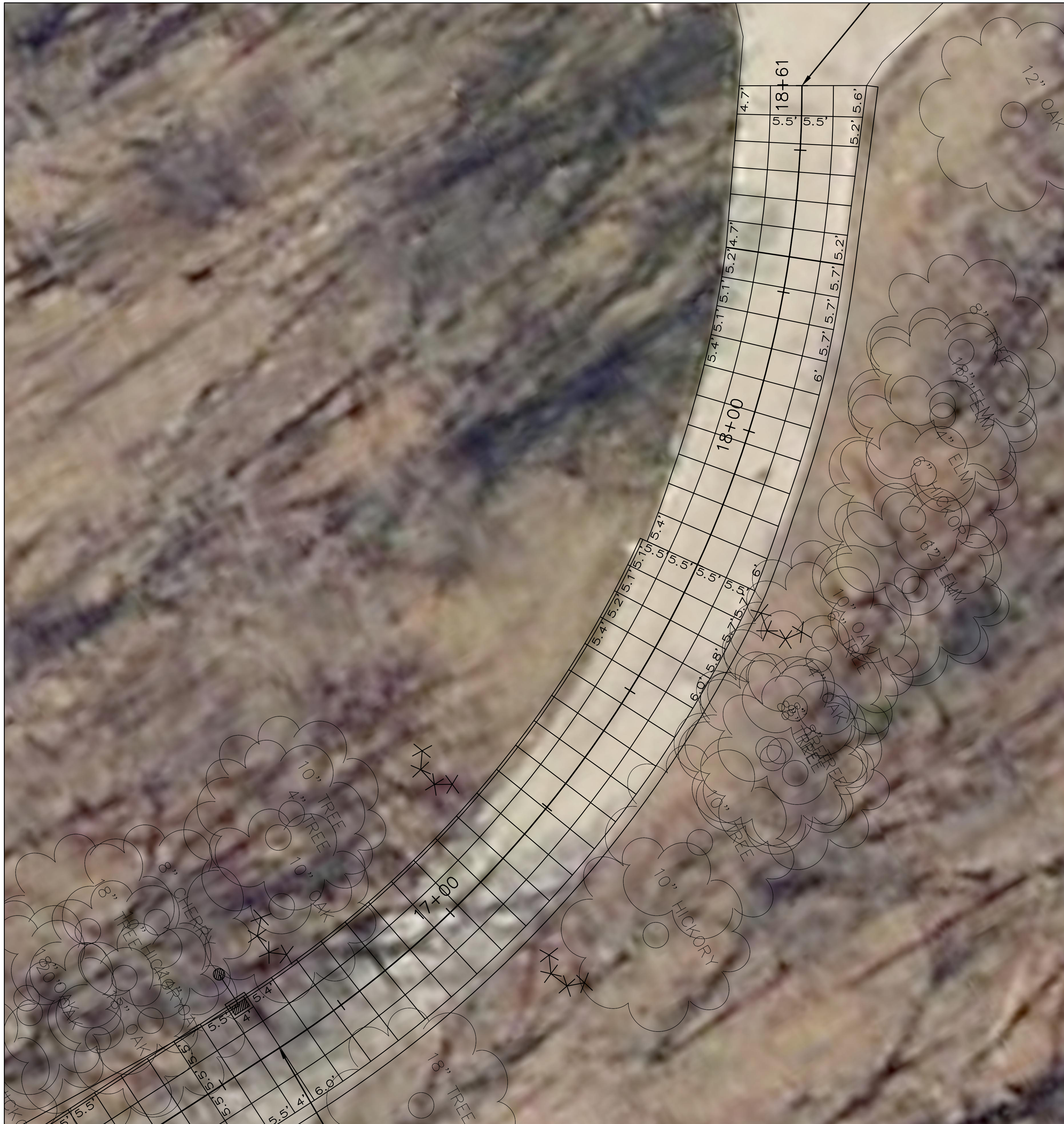

SEE SHEET #20 FOR CONTINUATION

0 20
FEET

LEGEND

EXISTING/PROPOSED

ST 8" — STORM SEWER

INTAKE

CONSULTANT:

IOWA DEPARTMENT OF NATURAL RESOURCES

ENGINEERING SERVICES - WALLACE BUILING
502 E. 9TH ST., DES MOINES, IA 50319-0034

JOINTING DETAILS

ROADWAY OVERLAY PROJECT FOR:

SPRINGBROOK STATE PARK

GUTHRIE COUNTY, IOWA

NO.	BY / DATE	REVISION

DRAWN BY:
PROJECT NUMBER: 15–04–39–02

CHK'D BY:
DATE: 07/01/2015

SHEET No: **21**

0+00.00

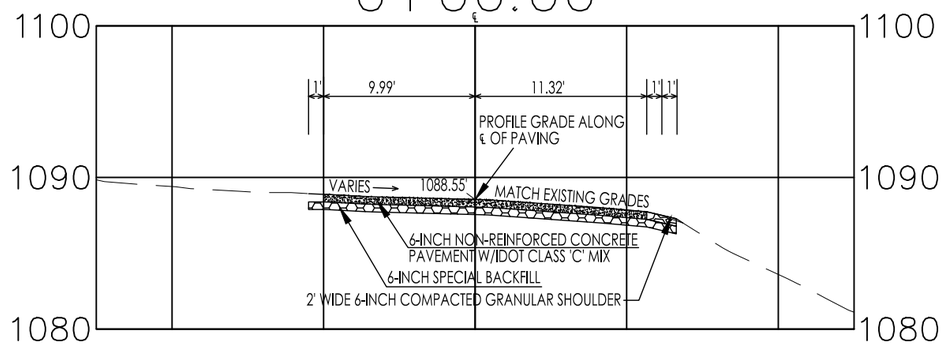

0+25.00

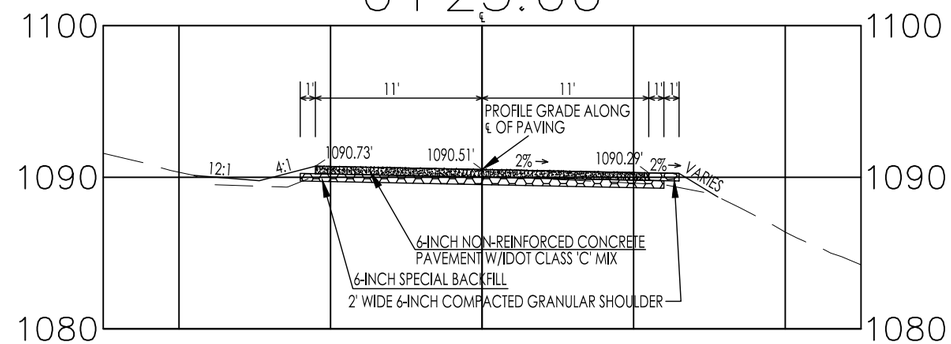

0+29.81

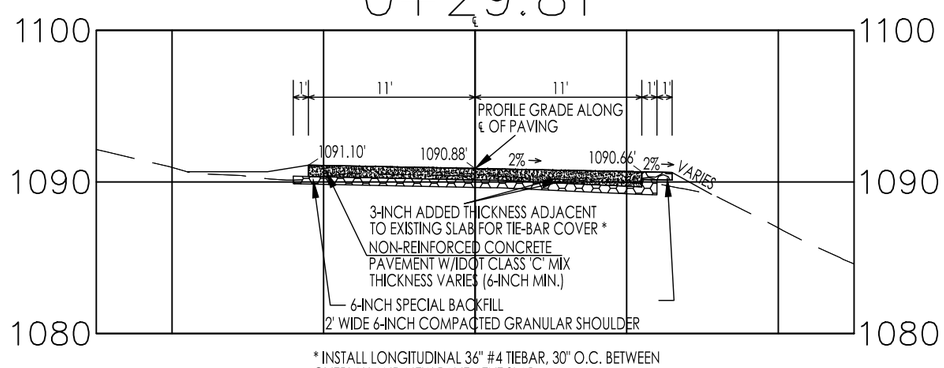

* INSTALL LONGITUDINAL 36" #4 TIEBAR, 30" O.C. BETWEEN OVERLAY AND NEW PAVEMENT SLAB

0+29.81

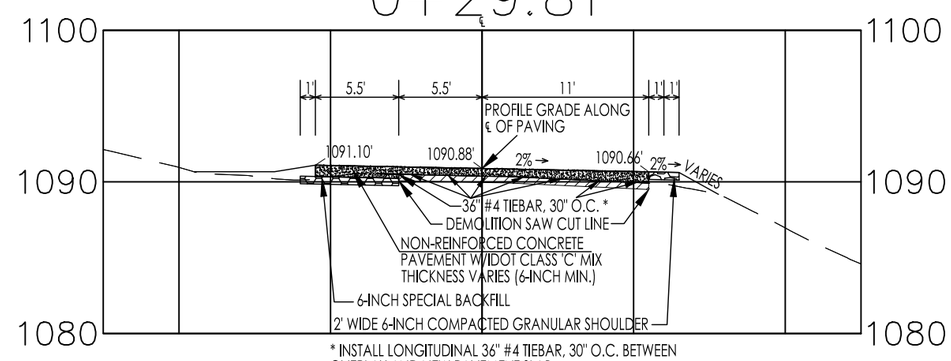

* INSTALL LONGITUDINAL 36" #4 TIEBAR, 30" O.C. BETWEEN OVERLAY AND NEW PAVEMENT SLAB

0+50.00

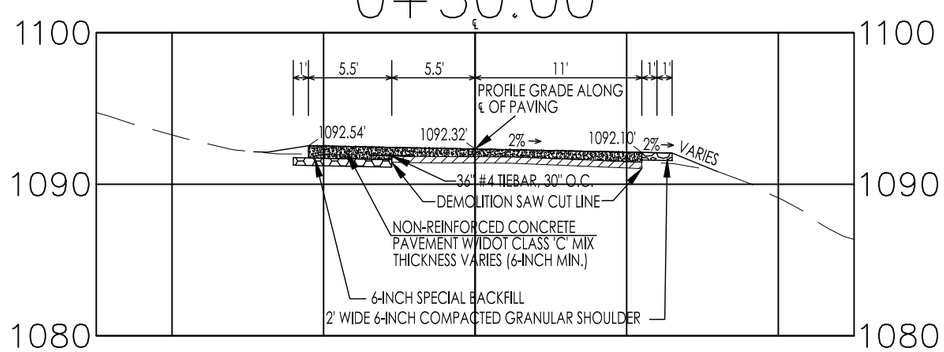

0+75.00

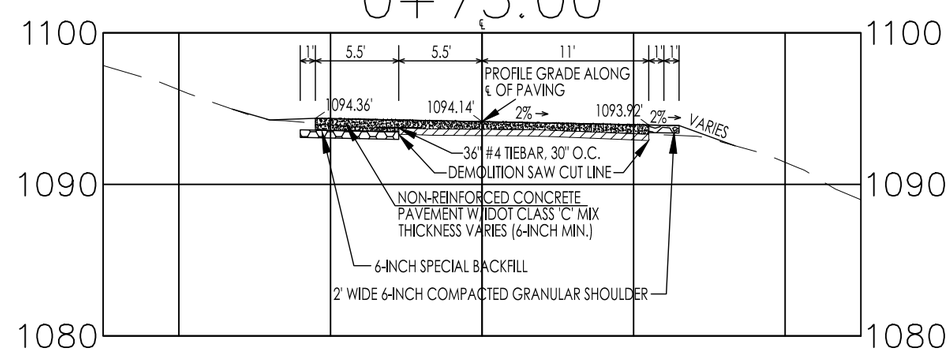

CONSULTANT:

IOWA DEPARTMENT OF NATURAL RESOURCES
ENGINEERING SERVICES - WALLACE BUILING
502 E. 9TH ST., DES MOINES, IA 50319-0034

CROSS-SECTIONS

ROADWAY OVERLAY PROJECT FOR:

SPRINGBROOK STATE PARK

GUTHRIE COUNTY, IOWA

NO.	BY / DATE	REVISION

DRAWN BY:
PROJECT NUMBER: 15-04-39-02
CHK'D BY:
DATE: 07/01/2015
SHEET No: 22

1+00.00

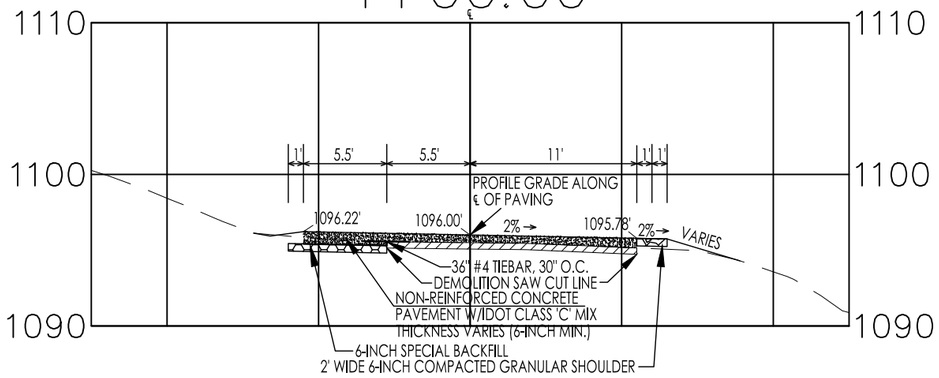

1+25.00

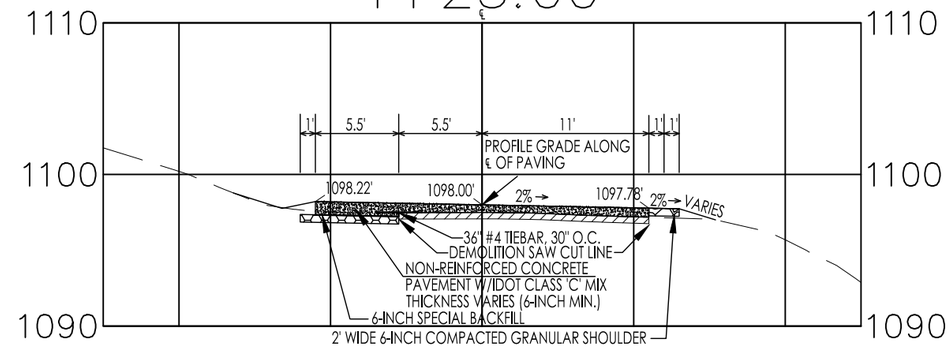

1+50.00

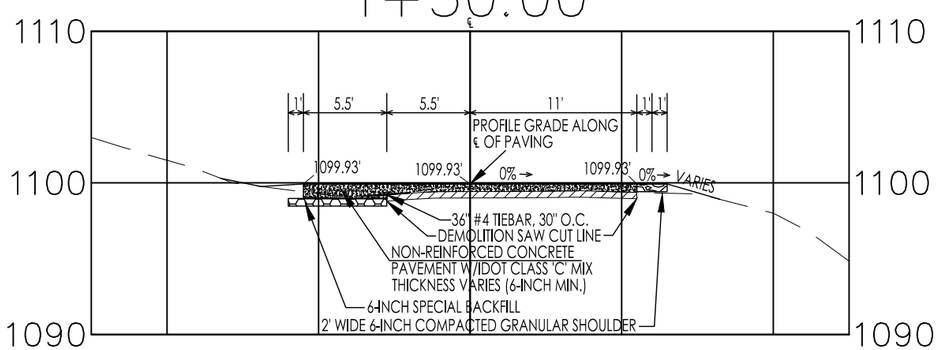

1+75.00

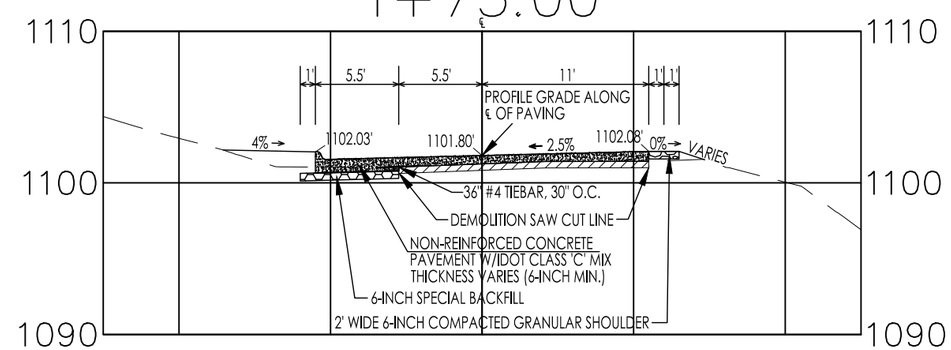

2+00.00

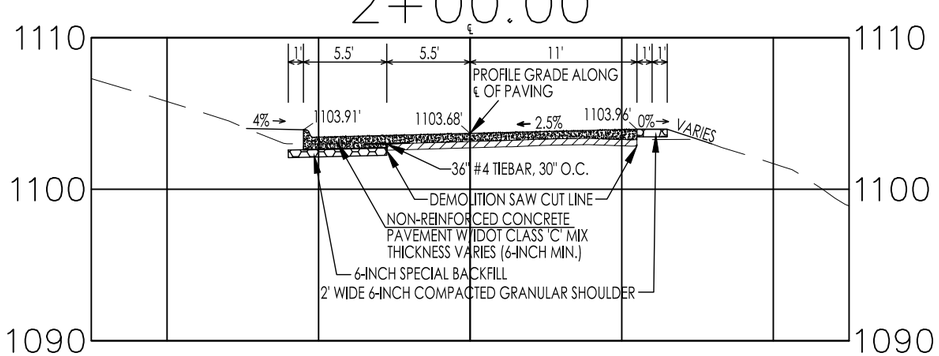

2+25.00

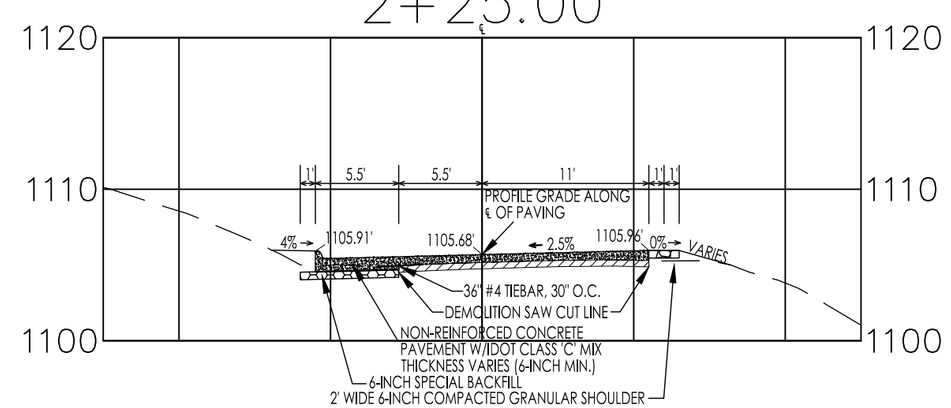

CONSULTANT:

IOWA DEPARTMENT OF NATURAL RESOURCES

ENGINEERING SERVICES - WALLACE BUILING
502 E. 9TH ST., DES MOINES, IA 50319-0034

CROSS-SECTIONS

ROADWAY OVERLAY PROJECT FOR:

SPRINGBROOK STATE PARK

GUTHRIE COUNTY, IOWA

NO.	BY / DATE	REVISION

DRAWN BY:

PROJECT NUMBER: 15-04-39-02

CHK'D BY:

DATE: 07/01/2015

SHEET No: 23

2+50.00

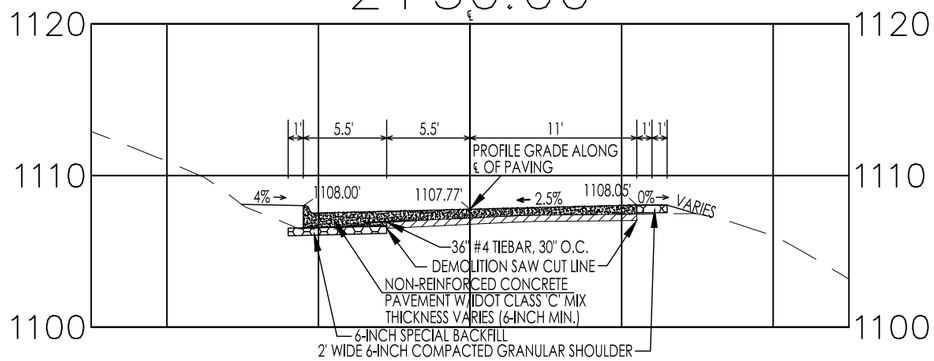

2+75.00

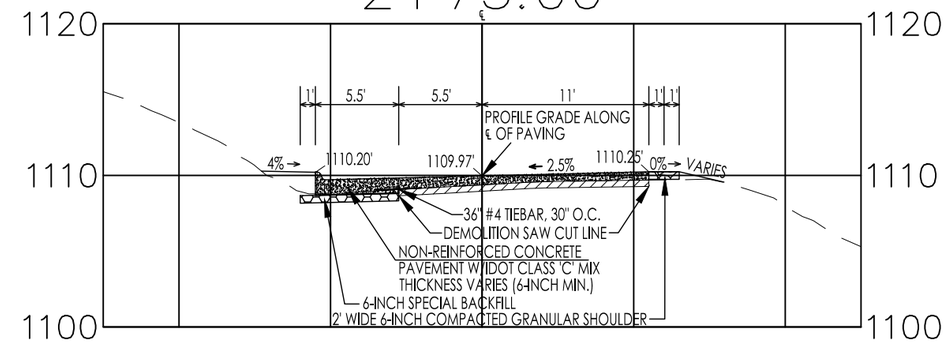

3+00.00

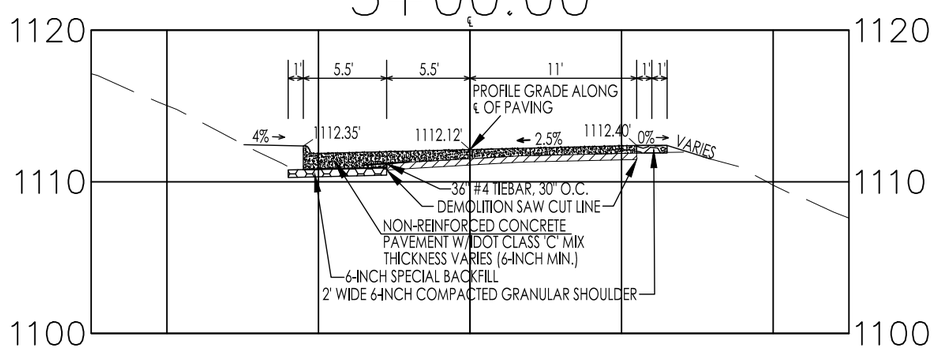

3+25.00

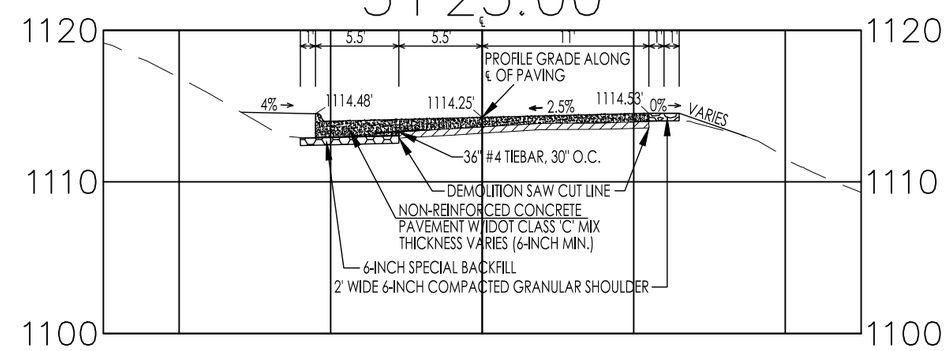

3+50.00

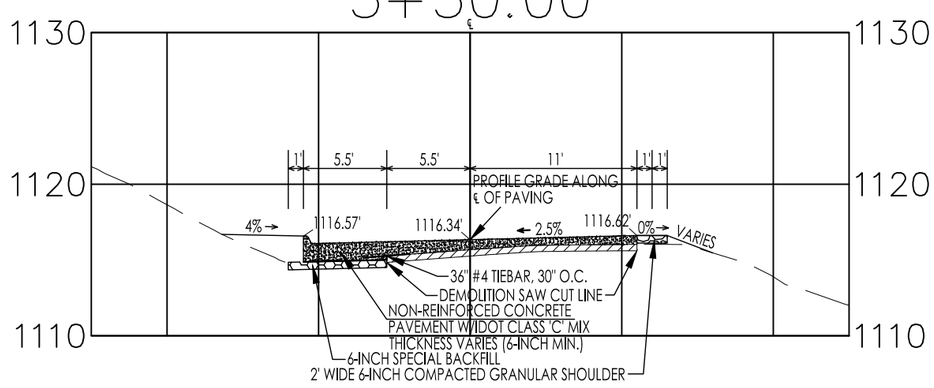

3+75.00

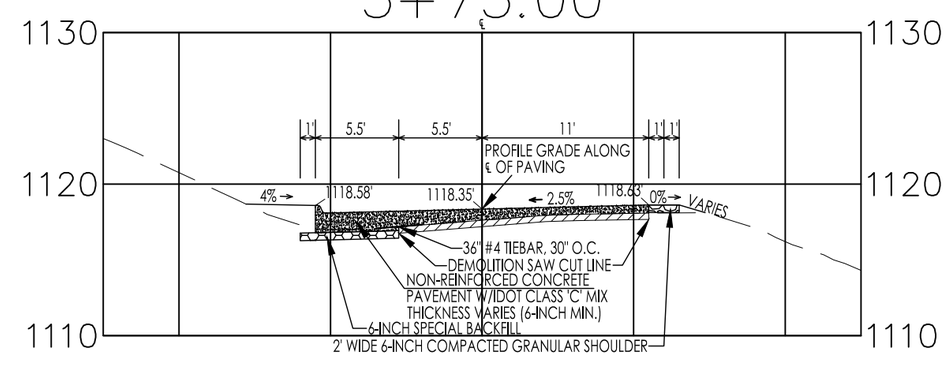

CONSULTANT:

IOWA DEPARTMENT OF NATURAL RESOURCES

ENGINEERING SERVICES - WALLACE BUILING
502 E. 9TH ST., DES MOINES, IA 50319-0034

CROSS-SECTIONS

ROADWAY OVERLAY PROJECT FOR:

SPRINGBROOK STATE PARK

GUTHRIE COUNTY, IOWA

NO.	BY / DATE	REVISION

DRAWN BY:

PROJECT NUMBER: 15-04-39-02

CHK'D BY:

DATE: 07/01/2015

SHEET No: 24

4+00.00

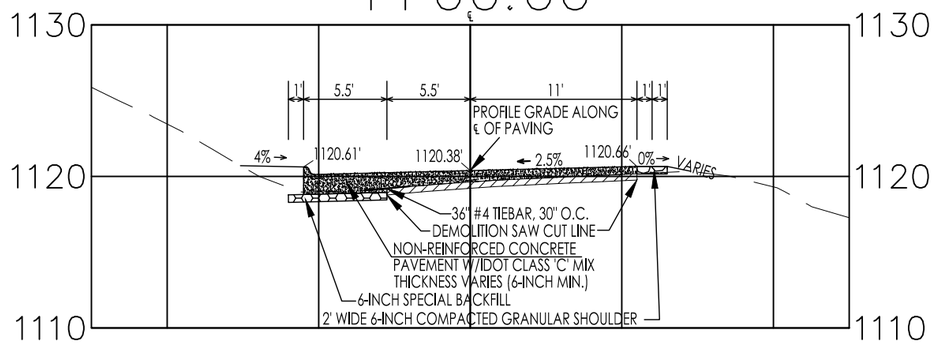

4+25.00

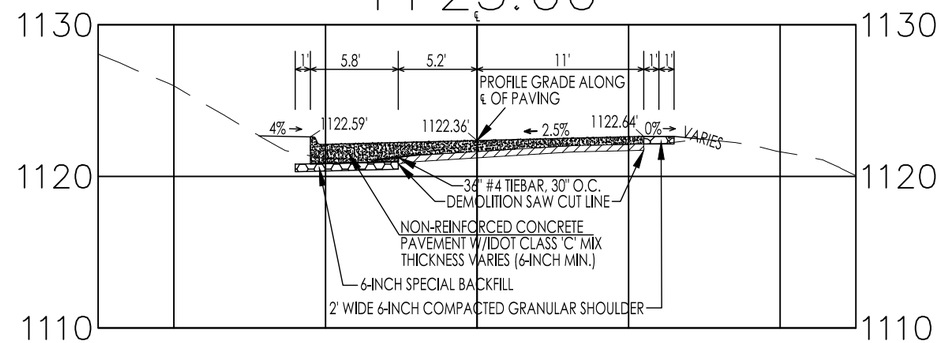

4+25.00

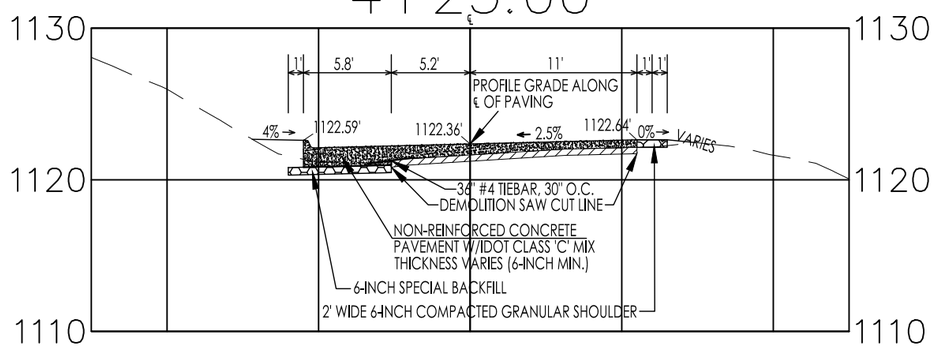

4+50.00

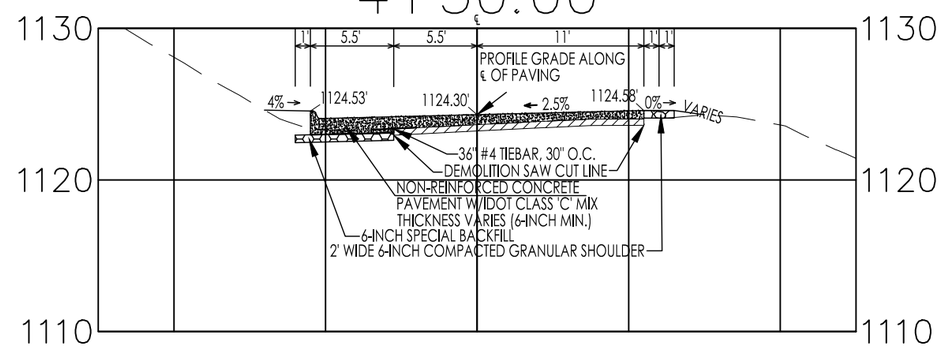

4+75.00

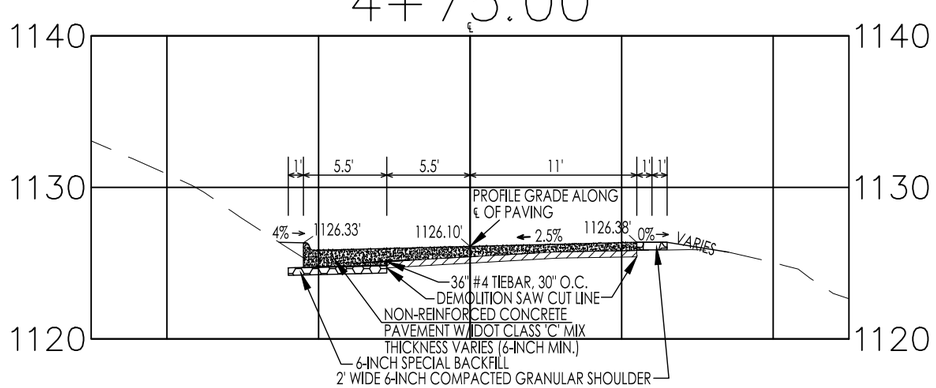

5+00.00

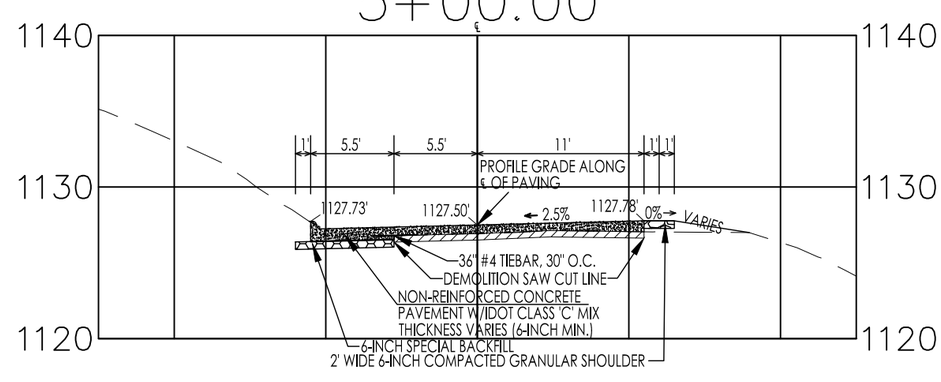

CONSULTANT:

IOWA DEPARTMENT OF NATURAL RESOURCES

ENGINEERING SERVICES - WALLACE BUILING
502 E. 9TH ST., DES MOINES, IA 50319-0034

CROSS-SECTIONS

ROADWAY OVERLAY PROJECT FOR:

SPRINGBROOK STATE PARK

GUTHRIE COUNTY, IOWA

NO.	BY DATE	REVISION

DRAWN BY:

CHK'D BY:

PROJECT NUMBER: 15-04-39-02

DATE: 07/01/2015

SHEET No: 25

5+25.00

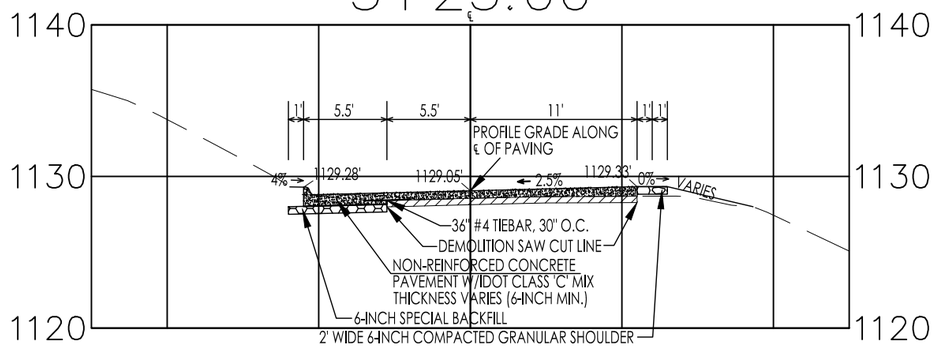

5+50.00

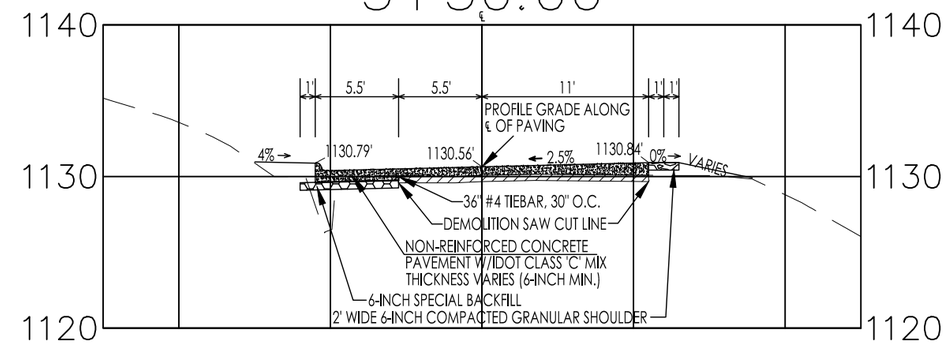

5+75.00

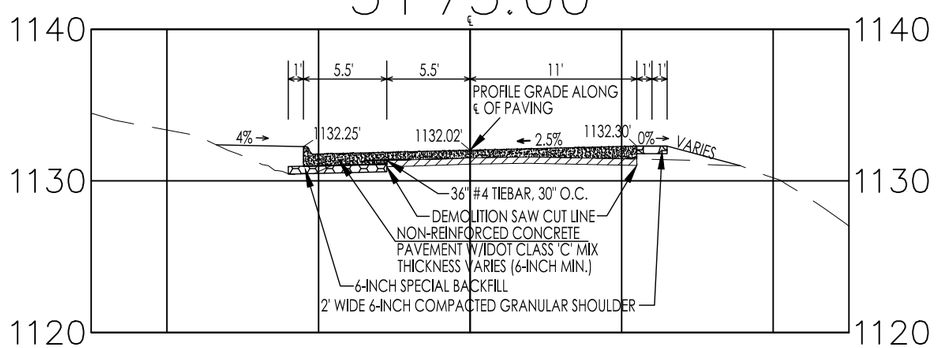

6+00.00

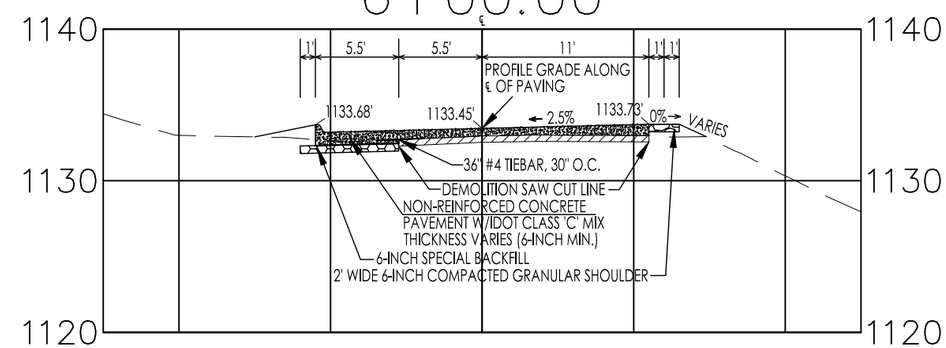

6+25.00

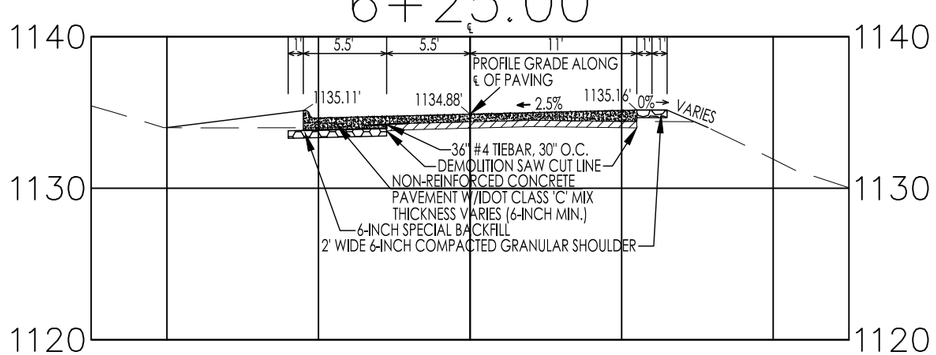

6+50.00

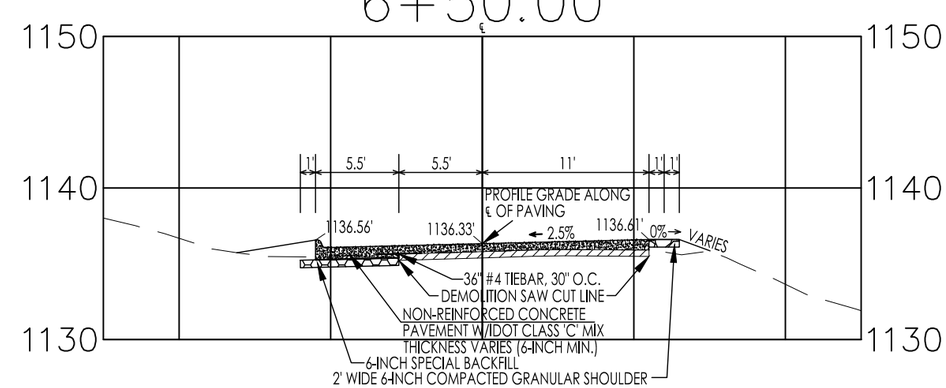

CONSULTANT:

IOWA DEPARTMENT OF NATURAL RESOURCES

ENGINEERING SERVICES - WALLACE BUILING
502 E. 9TH ST., DES MOINES, IA 50319-0034

CROSS-SECTIONS

ROADWAY OVERLAY PROJECT FOR:

SPRINGBROOK STATE PARK

GUTHRIE COUNTY, IOWA

NO.	BY DATE	REVISION

DRAWN BY:

PROJECT NUMBER: 15-04-39-02

CHK'D BY:

DATE: 07/01/2015

SHEET No: 26

6+75.00

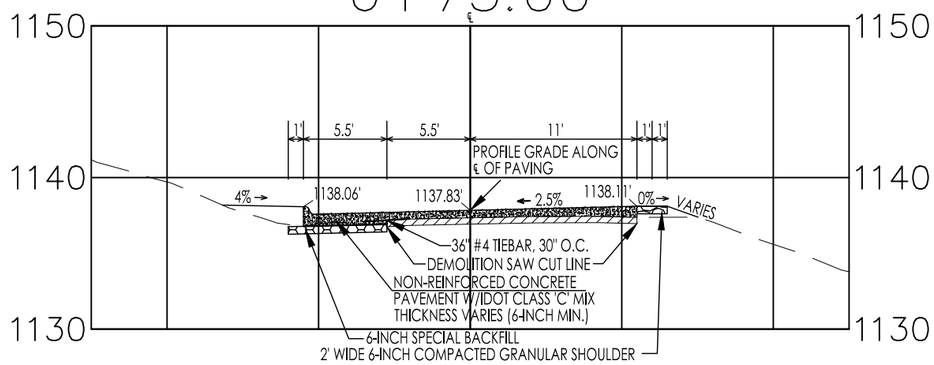

7+00.00

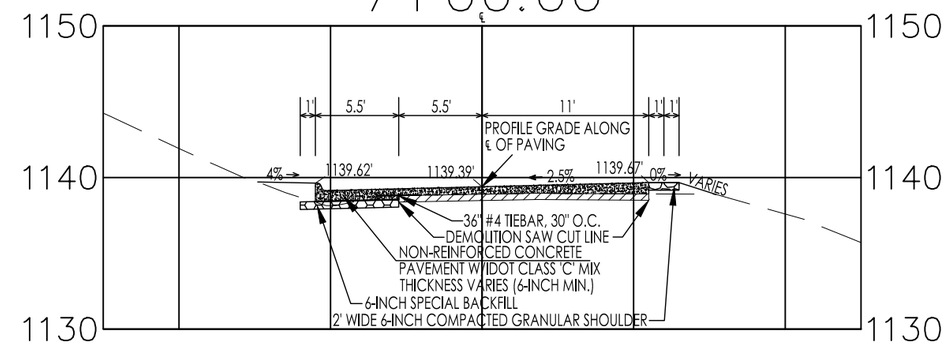

7+25.00

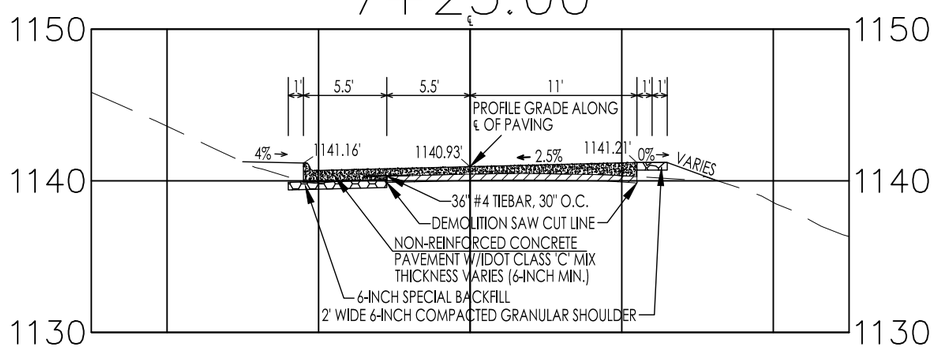

7+50.00

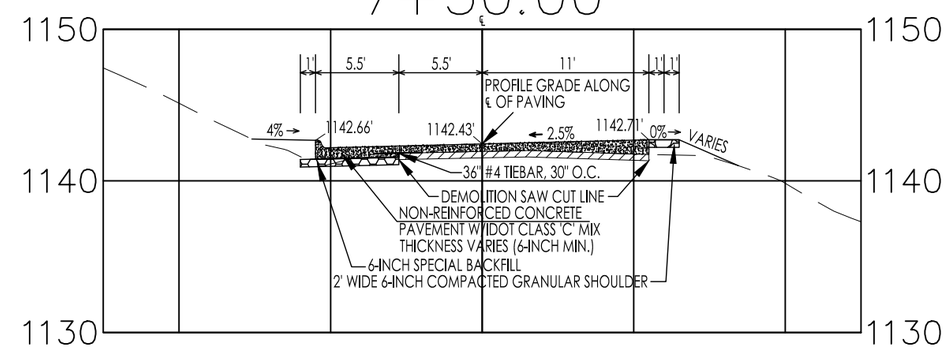

7+75.00

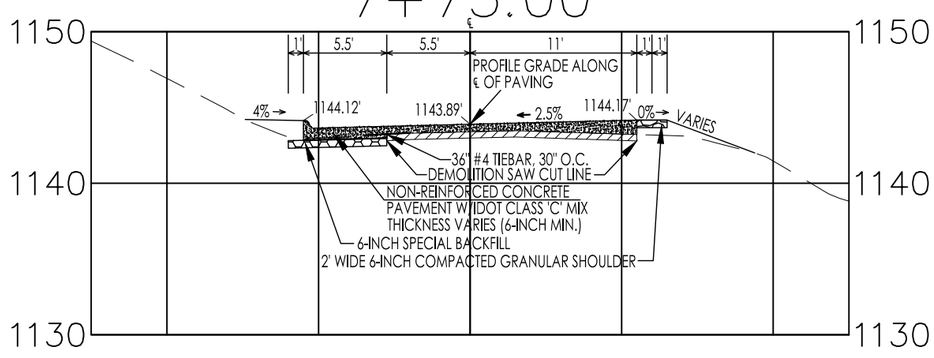

8+00.00

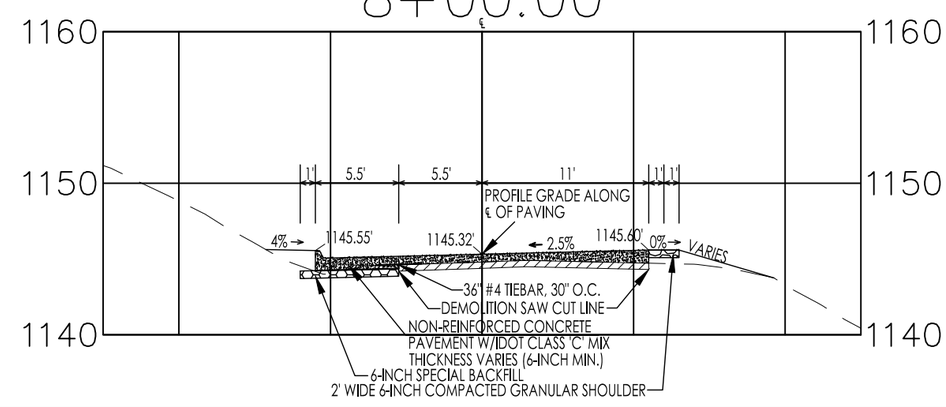

CONSULTANT:

IOWA DEPARTMENT OF NATURAL RESOURCES

ENGINEERING SERVICES - WALLACE BUILING
502 E. 9TH ST., DES MOINES, IA 50319-0034

CROSS-SECTIONS

ROADWAY OVERLAY PROJECT FOR:

SPRINGBROOK STATE PARK

GUTHRIE COUNTY, IOWA

NO.	BY / DATE	REVISION

DRAWN BY:

CHK'D BY:

PROJECT NUMBER: 15-04-39-02

DATE: 07/01/2015

SHEET No: 27

8+25.00

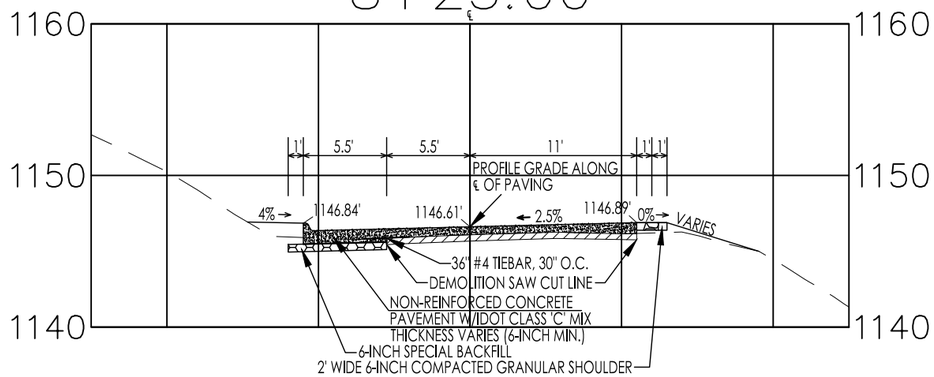

8+50.00

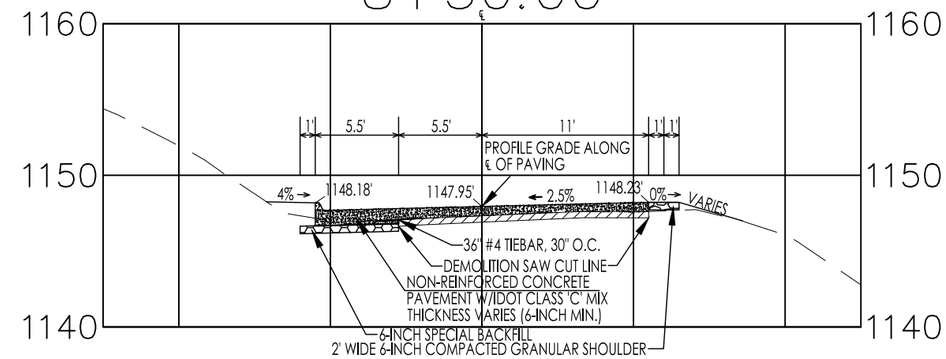

8+75.00

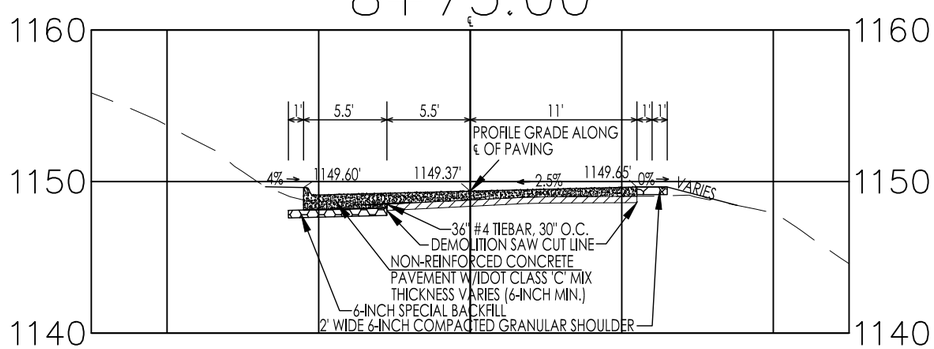

9+00.00

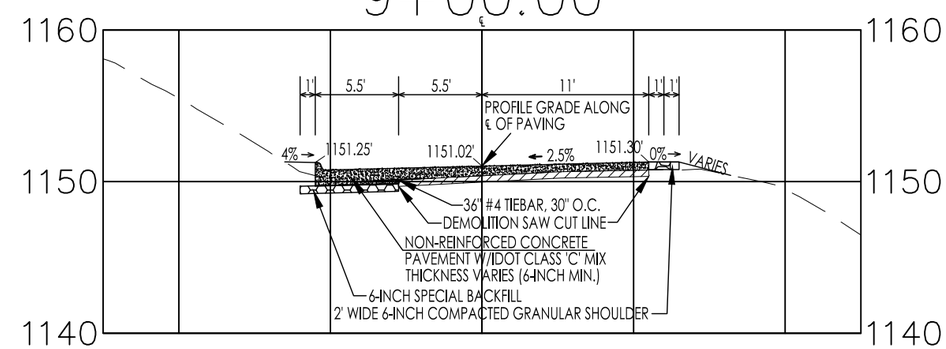

9+25.00

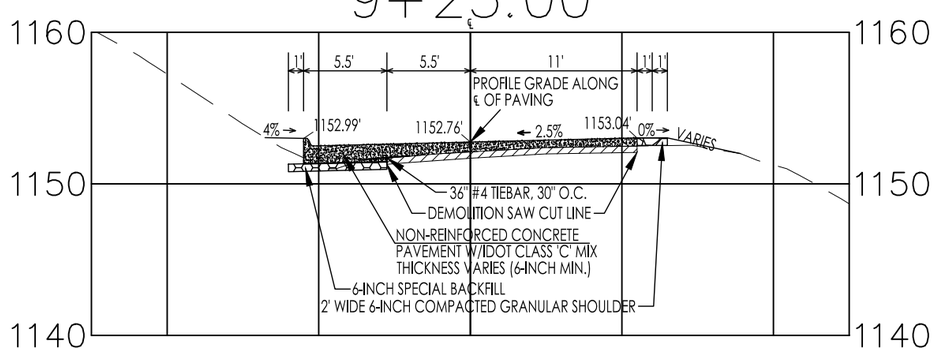

9+50.00

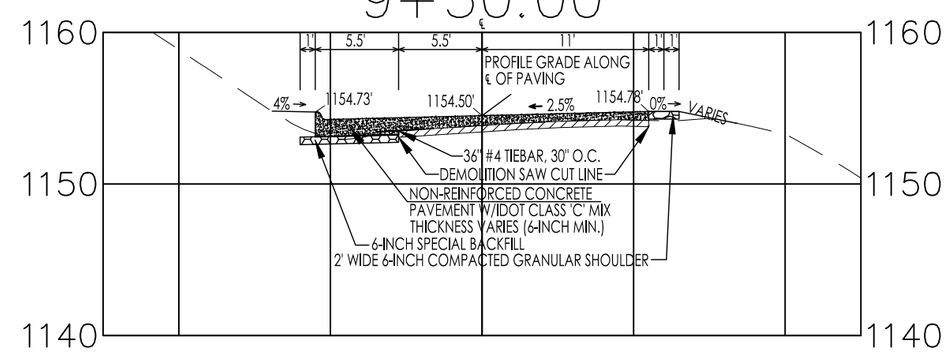

CONSULTANT:

IOWA DEPARTMENT OF NATURAL RESOURCES

ENGINEERING SERVICES - WALLACE BUILING
502 E. 9TH ST., DES MOINES, IA 50319-0034

CROSS-SECTIONS

ROADWAY OVERLAY PROJECT FOR:

SPRINGBROOK STATE PARK

GUTHRIE COUNTY, IOWA

NO.	BY / DATE	REVISION

DRAWN BY:

PROJECT NUMBER: 15-04-39-02

CHK'D BY:

DATE: 07/01/2015

SHEET No: 28

9+75.00

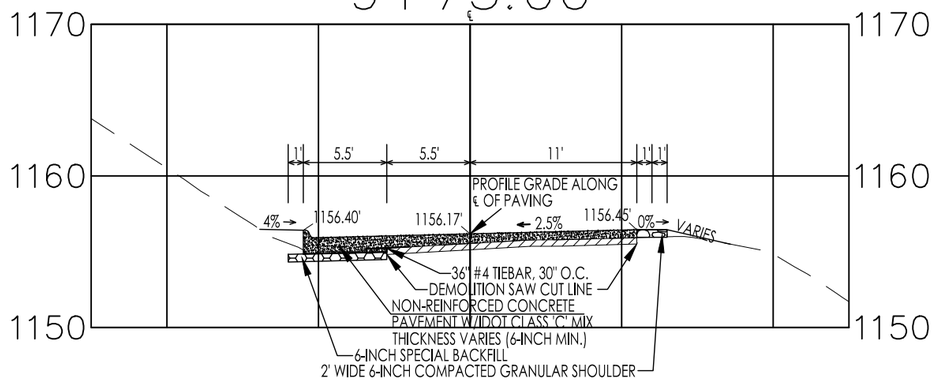

10+00.00

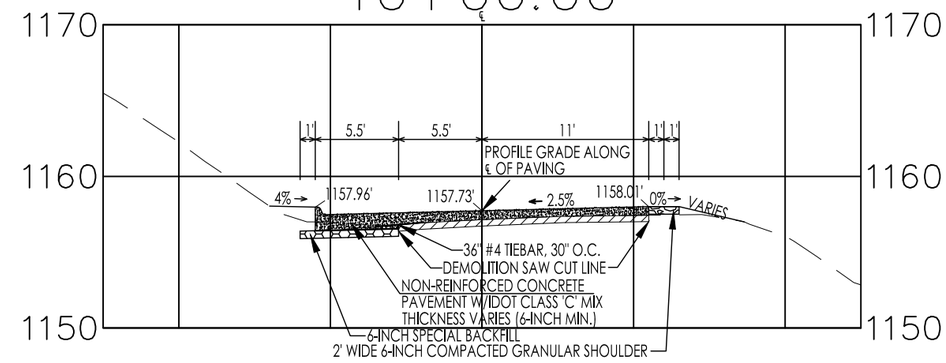

10+25.00

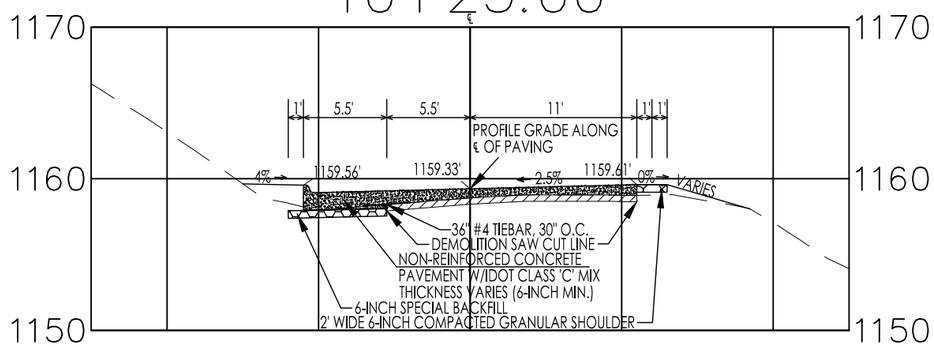

10+50.00

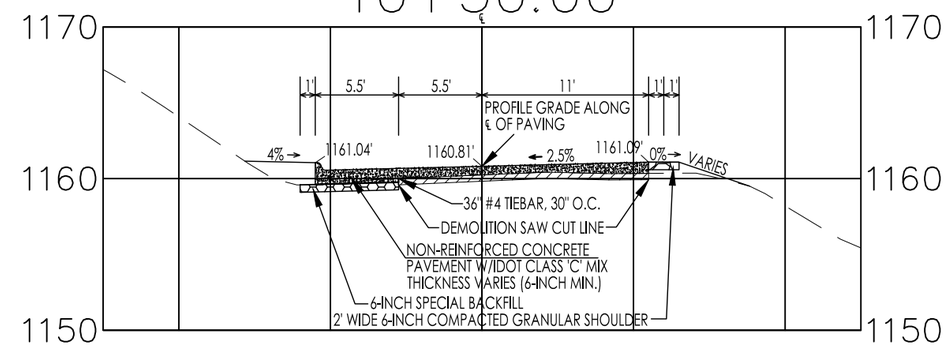

10+75.00

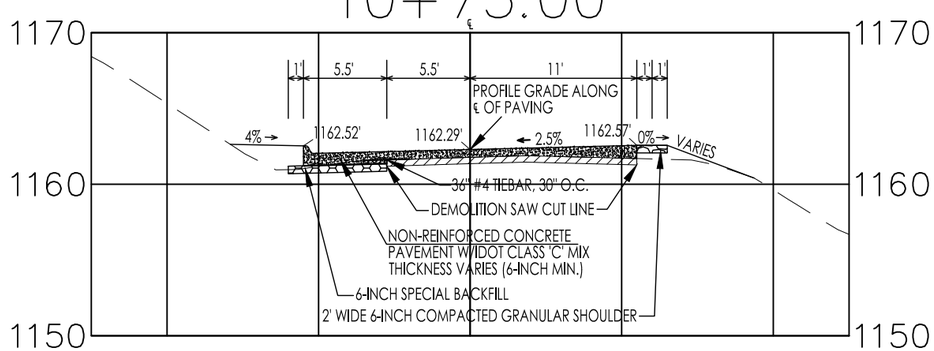

11+00.00

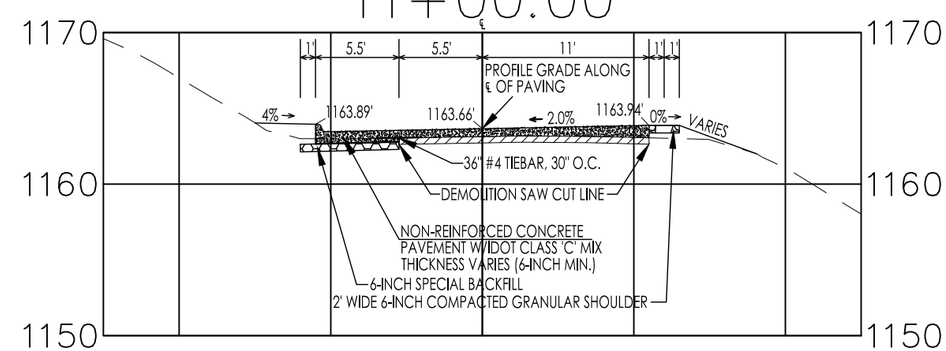

CONSULTANT:

IOWA DEPARTMENT OF NATURAL RESOURCES
ENGINEERING SERVICES - WALLACE BUILDING
502 E. 9TH ST., DES MOINES, IA 50319-0034

CROSS-SECTIONS

ROADWAY OVERLAY PROJECT FOR:

SPRINGBROOK STATE PARK

GUTHRIE COUNTY, IOWA

NO.	BY DATE	REVISION

DRAWN BY:
PROJECT NUMBER: 15-04-39-02
CHK'D BY:
DATE: 07/01/2015
SHEET No: 29

11+25.00

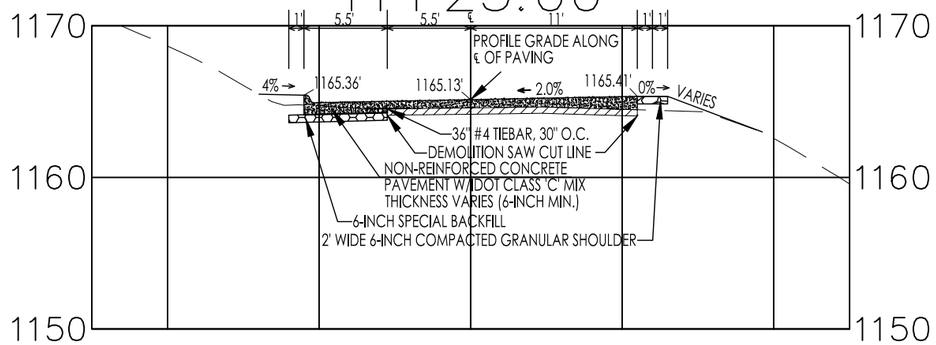

11+50.00

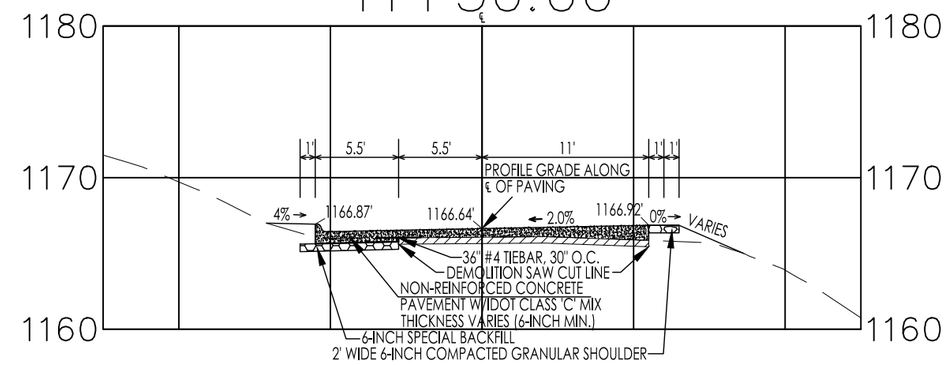

11+75.00

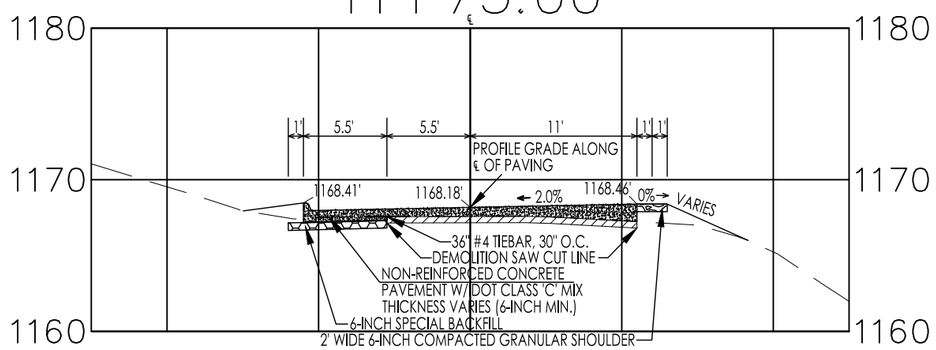

12+00.00

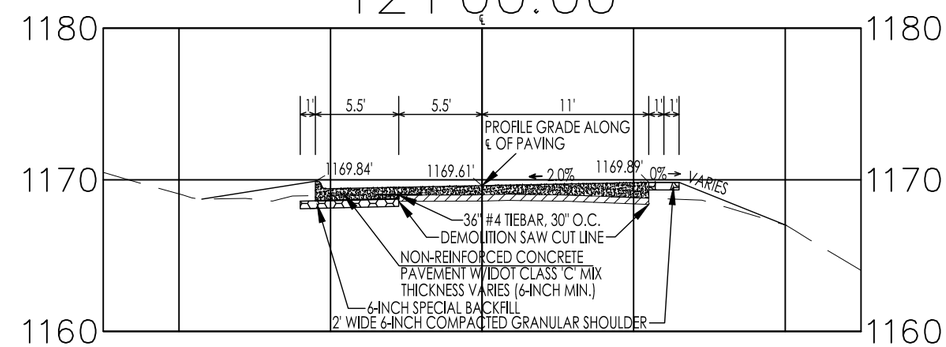

12+25.00

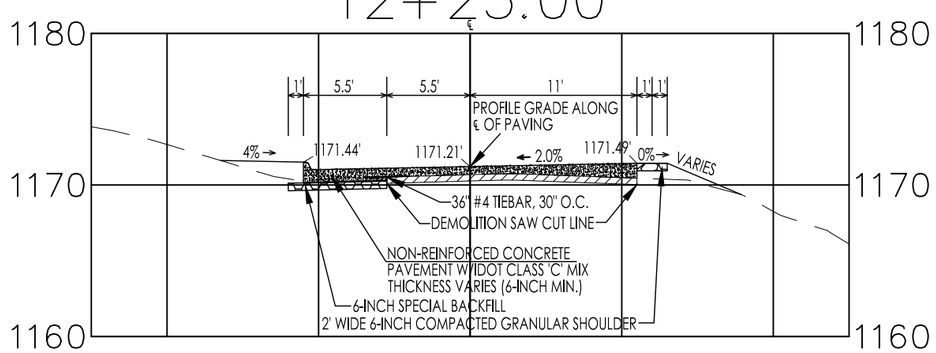

12+50.00

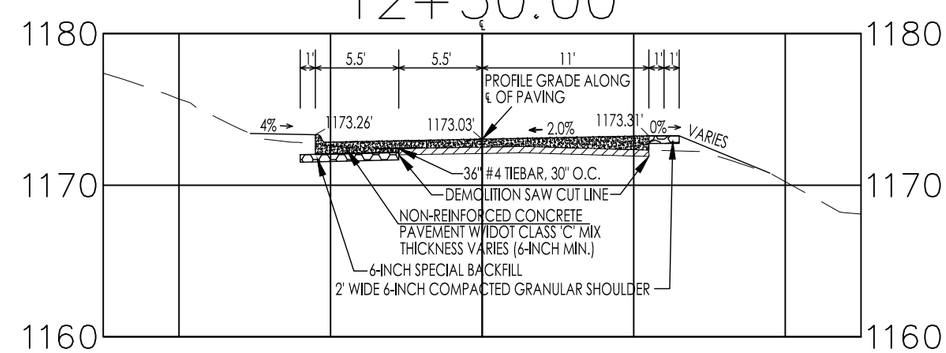

CONSULTANT:

IOWA DEPARTMENT OF NATURAL RESOURCES

ENGINEERING SERVICES - WALLACE BUILING
502 E. 9TH ST., DES MOINES, IA 50319-0034

CROSS-SECTIONS

ROADWAY OVERLAY PROJECT FOR:

SPRINGBROOK STATE PARK

GUTHRIE COUNTY, IOWA

NO.	BY DATE	REVISION

DRAWN BY:

PROJECT NUMBER: 15-04-39-02

CHK'D BY:

DATE: 07/01/2015

SHEET No: 30

12+75.00

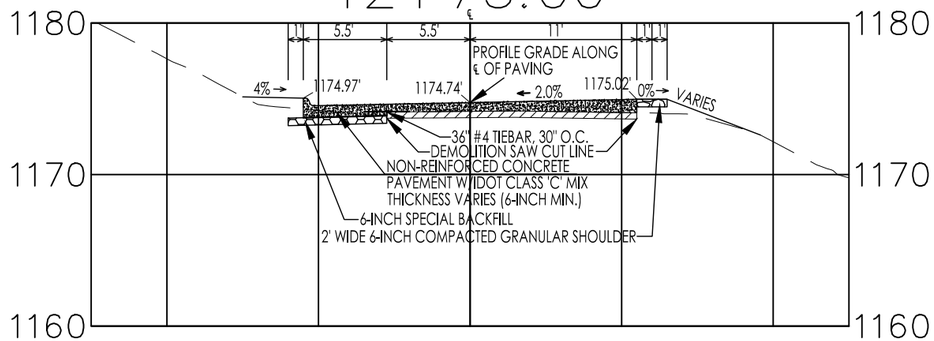

13+00.00

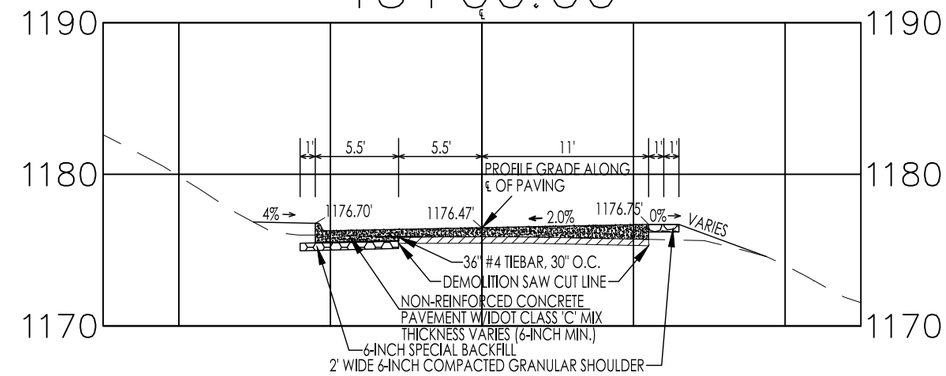

13+25.00

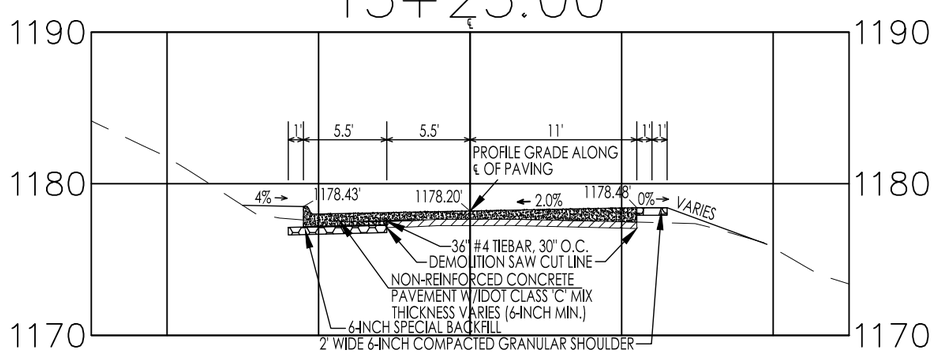

13+50.00

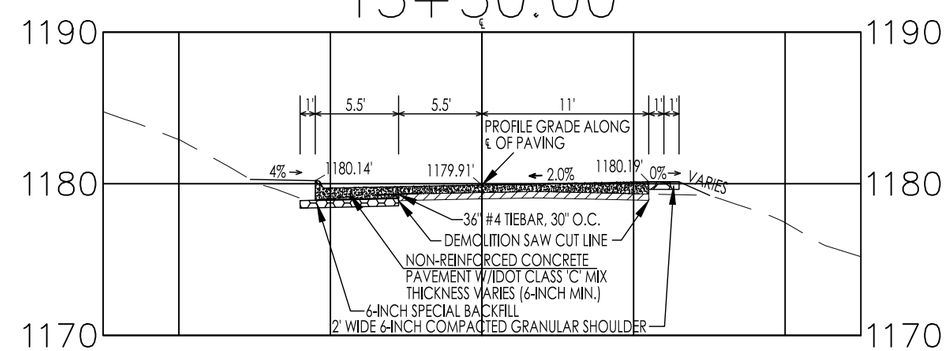

13+75.00

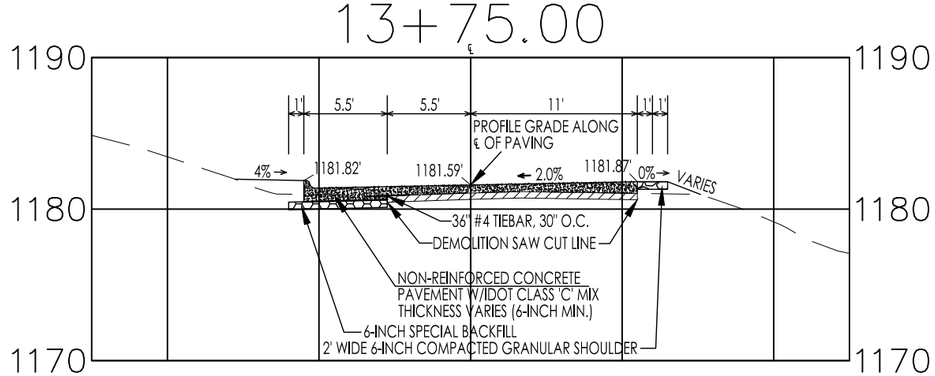

14+00.00

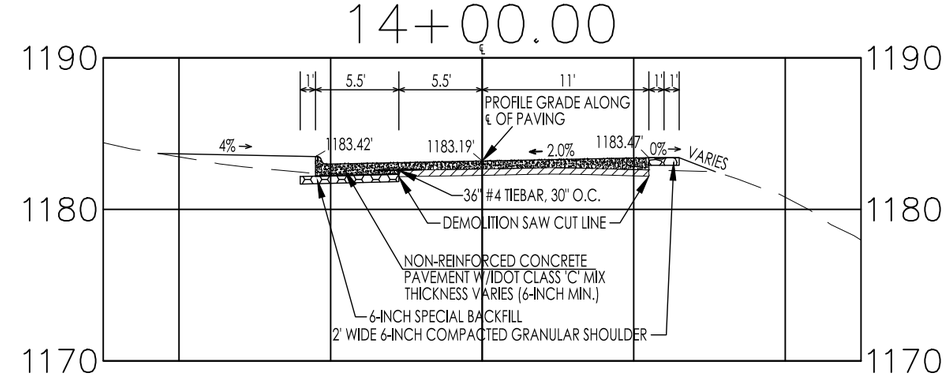

CONSULTANT:

IOWA DEPARTMENT OF NATURAL RESOURCES

ENGINEERING SERVICES - WALLACE BUILING
502 E. 9TH ST., DES MOINES, IA 50319-0034

CROSS-SECTIONS

ROADWAY OVERLAY PROJECT FOR:

SPRINGBROOK STATE PARK

GUTHRIE COUNTY, IOWA

NO.	BY / DATE	REVISION

DRAWN BY: | PROJECT NUMBER: 15-04-39-02

CHK'D BY: | DATE: 07/01/2015

SHEET No: 31

14+25.00

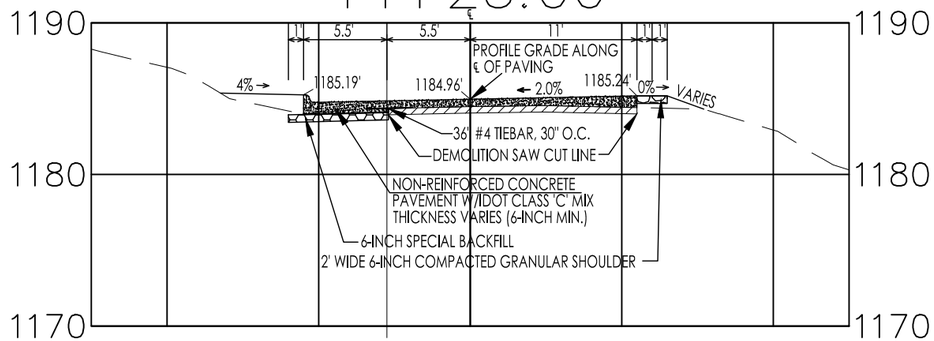

14+50.00

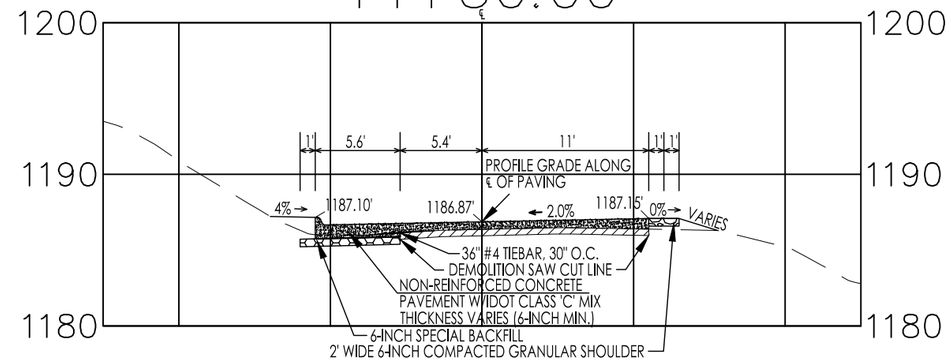

14+75.00

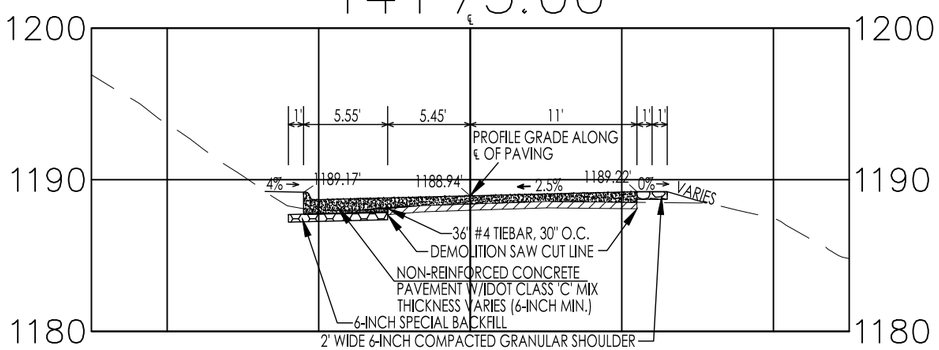

15+00.00

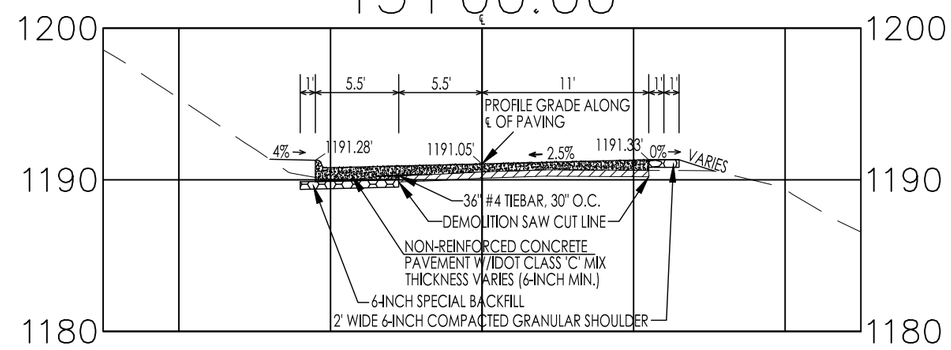

15+25.00

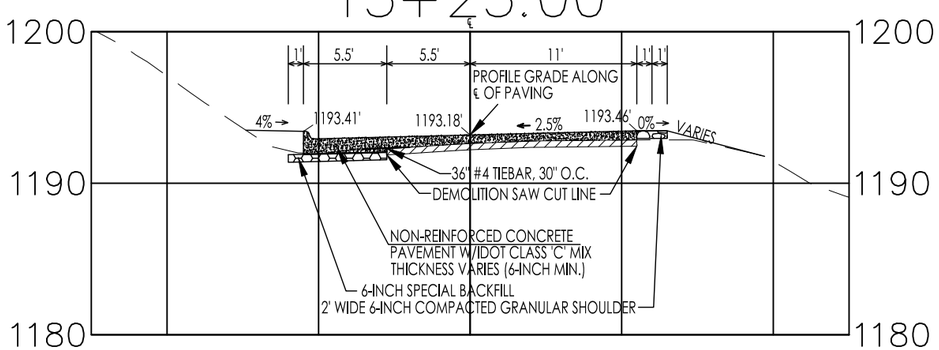

15+50.00

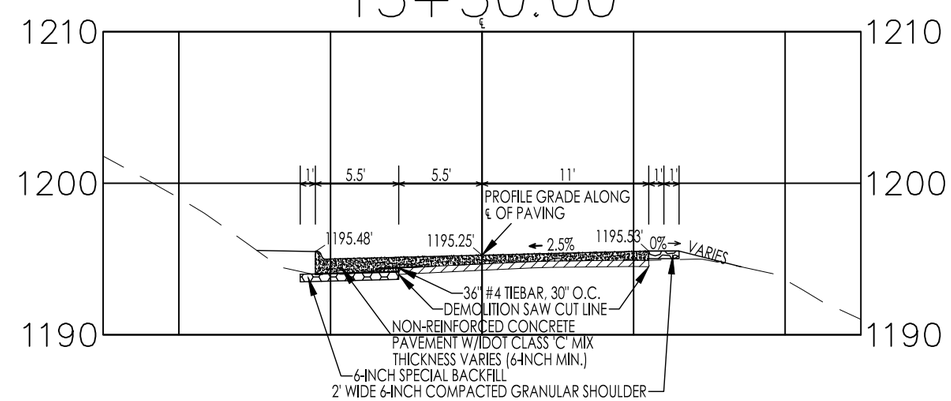

CONSULTANT:

IOWA DEPARTMENT OF NATURAL RESOURCES

ENGINEERING SERVICES - WALLACE BUILING
502 E. 9TH ST., DES MOINES, IA 50319-0034

CROSS-SECTIONS

ROADWAY OVERLAY PROJECT FOR:

SPRINGBROOK STATE PARK

GUTHRIE COUNTY, IOWA

NO.	BY DATE	REVISION

DRAWN BY:

PROJECT NUMBER: 15-04-39-02

CHK'D BY:

DATE: 07/01/2015

SHEET No: 32

15+75.00

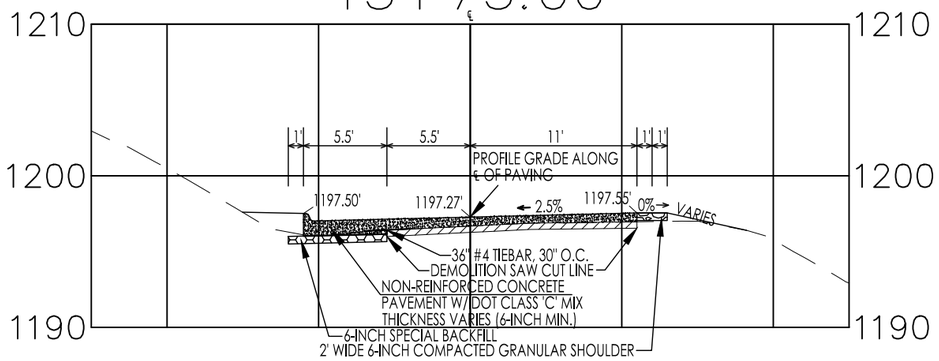

16+00.00

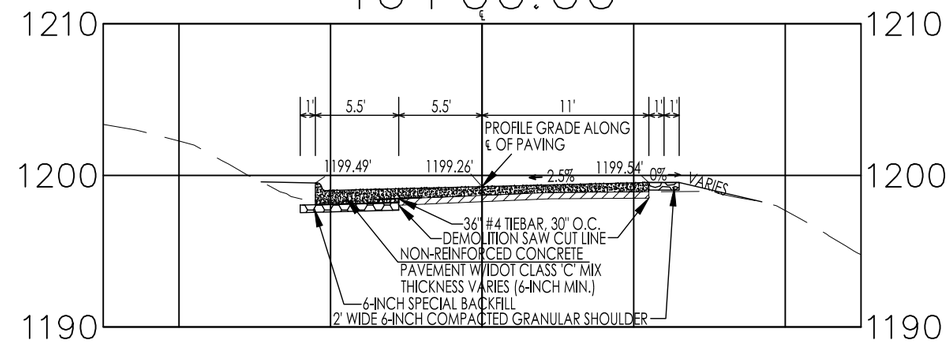

16+25.00

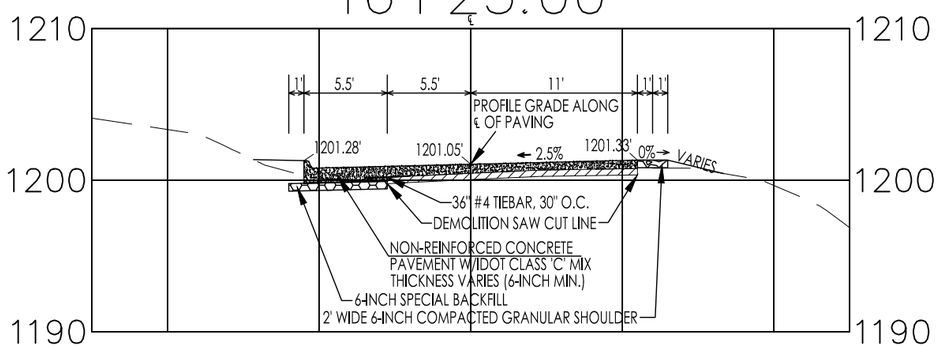

16+50.00

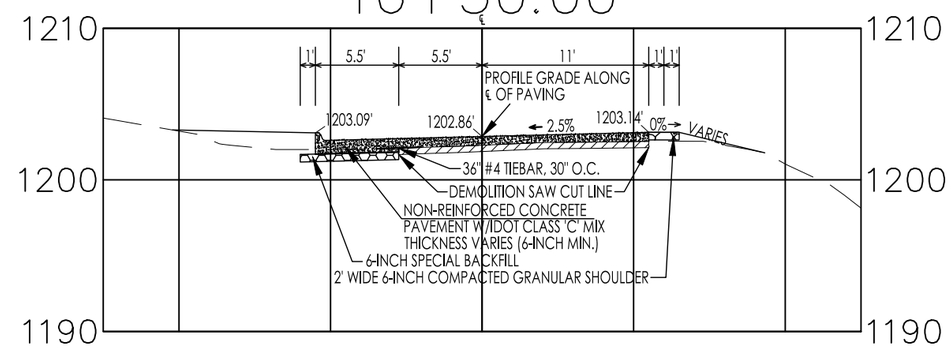

16+75.00

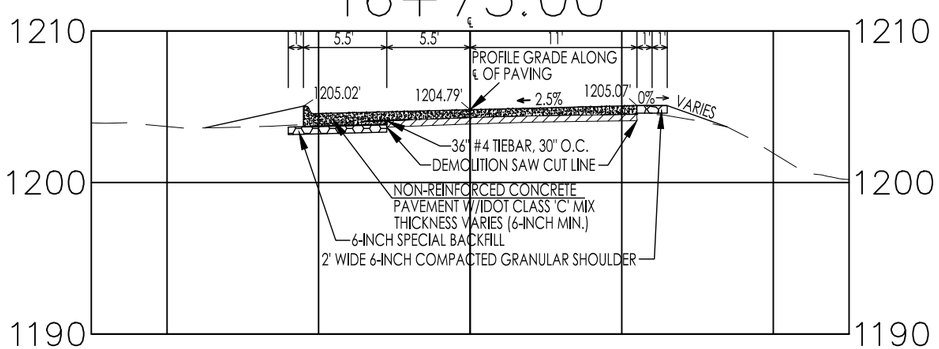

17+00.00

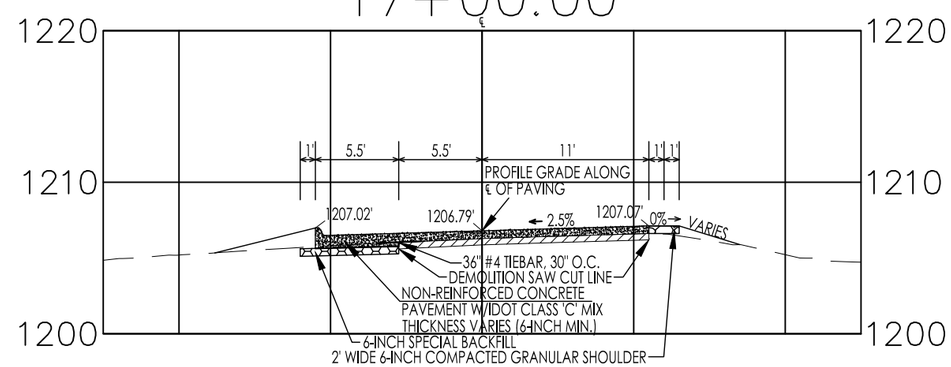

CONSULTANT:

IOWA DEPARTMENT OF NATURAL RESOURCES

ENGINEERING SERVICES - WALLACE BUILING
502 E. 9TH ST., DES MOINES, IA 50319-0034

CROSS-SECTIONS

ROADWAY OVERLAY PROJECT FOR:

SPRINGBROOK STATE PARK

GUTHRIE COUNTY, IOWA

NO.	BY DATE	REVISION

DRAWN BY:

PROJECT NUMBER: 15-04-39-02

CHK'D BY:

DATE: 07/01/2015

SHEET No: 33

17+25.00

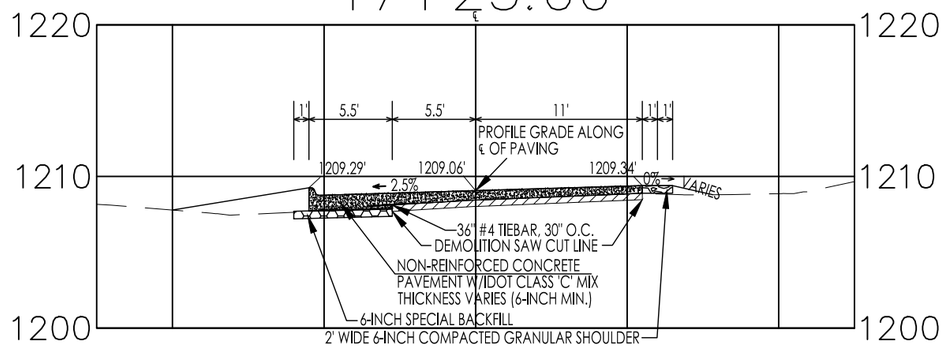

17+50.00

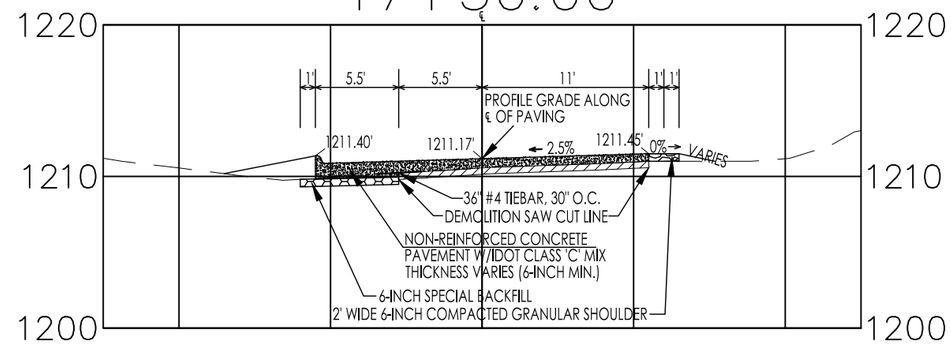

17+75.00

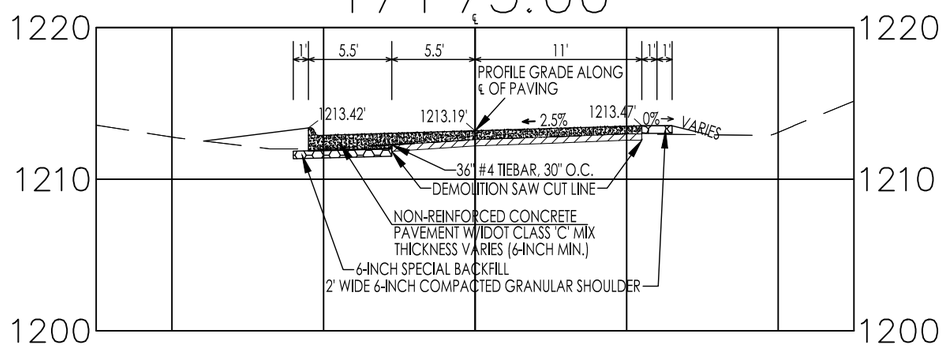

17+75.00

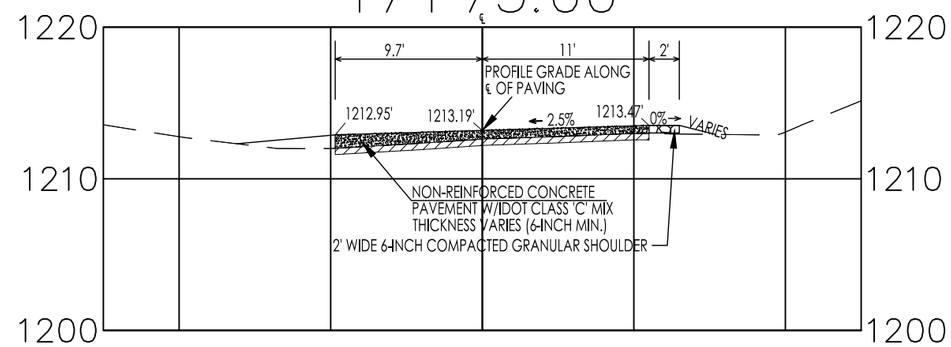

18+00.00

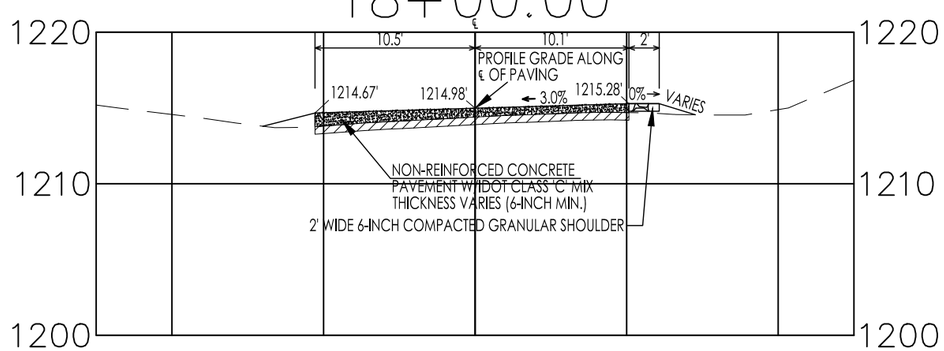

18+25.00

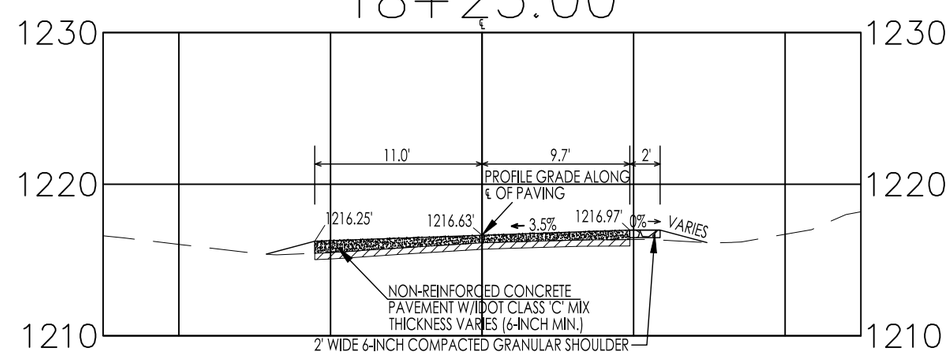

CONSULTANT:

IOWA DEPARTMENT OF NATURAL RESOURCES

ENGINEERING SERVICES - WALLACE BUILING
502 E. 9TH ST., DES MOINES, IA 50319-0034

CROSS-SECTIONS

ROADWAY OVERLAY PROJECT FOR:

SPRINGBROOK STATE PARK

GUTHRIE COUNTY, IOWA

NO.	BY DATE	REVISION

DRAWN BY:

PROJECT NUMBER: 15-04-39-02

CHK'D BY:

DATE: 07/01/2015

SHEET No: 34

18+31.28

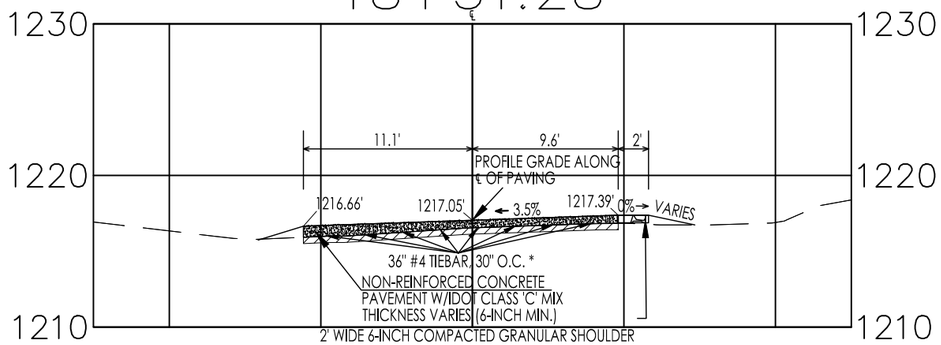

* INSTALL LONGITUDINAL 36" #4 TIEBAR, 30" O.C. BETWEEN OVERLAY AND NEW PAVEMENT SLAB

18+31.28

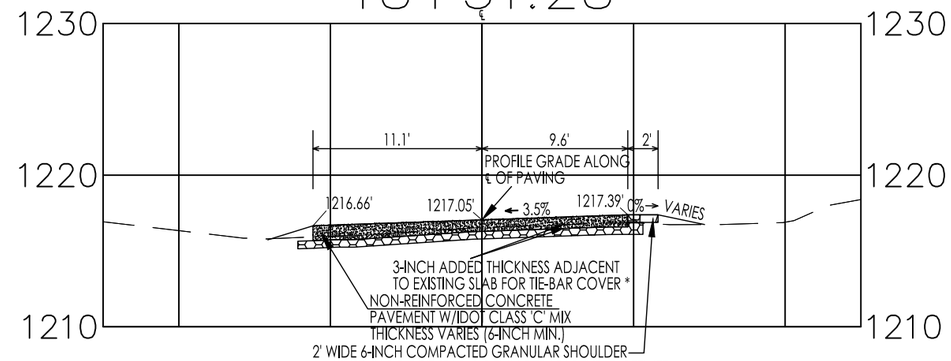

* INSTALL LONGITUDINAL 36" #4 TIEBAR, 30" O.C. BETWEEN OVERLAY AND NEW PAVEMENT SLAB

18+50.00

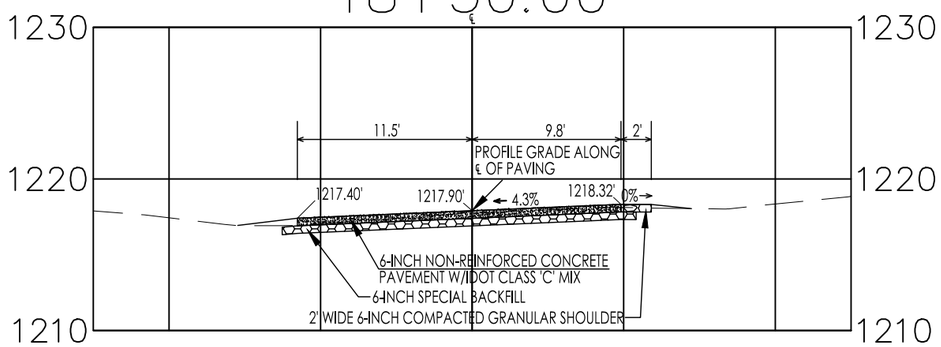

18+61.27

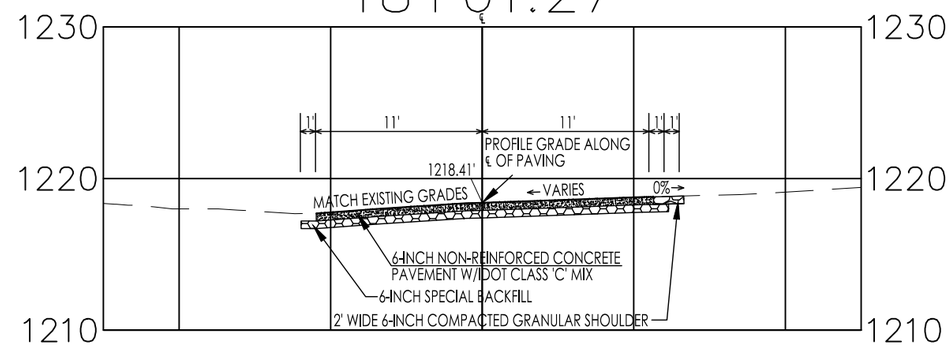

CONSULTANT:

IOWA DEPARTMENT OF NATURAL RESOURCES

ENGINEERING SERVICES - WALLACE BUILING
502 E. 9TH ST., DES MOINES, IA 50319-0034

CROSS-SECTIONS

ROADWAY OVERLAY PROJECT FOR:

SPRINGBROOK STATE PARK

GUTHRIE COUNTY, IOWA

NO.	BY / DATE	REVISION

DRAWN BY:
PROJECT NUMBER: 15-04-39-02
CHK'D BY:
DATE: 07/01/2015

SHEET No: 35

BRIDGE REPLACEMENT - CCS
SP-650-0(9)--7C-39

LETTING DATE
JULY 21, 2015

GUTHRIE COUNTY - DESIGN NO. 215

GUTHRIE COUNTY

LEGEND

- INTERSTATE HIGHWAY
- PRIMARY HIGHWAY-DIVIDED
- PRIMARY HIGHWAY
- PORTLAND CEMENT CONCRETE ROAD
- ASPHALT ROAD
- BITUMINOUS ROAD
- GRAVEL ROAD
- EARTHEN ROAD
- INTERSTATE HIGHWAY (80)
- UNITED STATES HIGHWAY (65)
- STATE HIGHWAY (175)
- COUNTY HIGHWAY (S27)
- RAILROAD
- PIPELINE
- AIRPORT
- HYDROLOGY
- BRIDGE
- STATE BOUNDARY
- COUNTY BOUNDARY
- CORPORATE BOUNDARY
- TOWNSHIP LINE
- SECTION LINE
- ROAD NAMES — ABBEY ROAD
- UNINCORPORATED PLACE — ELWOOD

IOWA DOT
Highway Division

PLANS OF PROPOSED IMPROVEMENTS ON THE

STATE PARKS AND INSTITUTIONAL ROADS

GUTHRIE COUNTY

BRIDGE REPLACEMENT - CCS

IA 650 OVER SPRINGBROOK CREEK
IN SPRINGBROOK STATE PARK
0.4 MI N. OF STATE PARK ENTRANCE

THE IOWA DEPARTMENT OF TRANSPORTATION STANDARD SPECIFICATIONS FOR HIGHWAY AND BRIDGE CONSTRUCTION, SERIES 2012, PLUS APPLICABLE GENERAL SUPPLEMENTAL SPECIFICATIONS, DEVELOPMENTAL SPECIFICATIONS, SUPPLEMENTAL SPECIFICATIONS AND SPECIAL PROVISIONS SHALL APPLY TO CONSTRUCTION WORK ON THIS PROJECT.

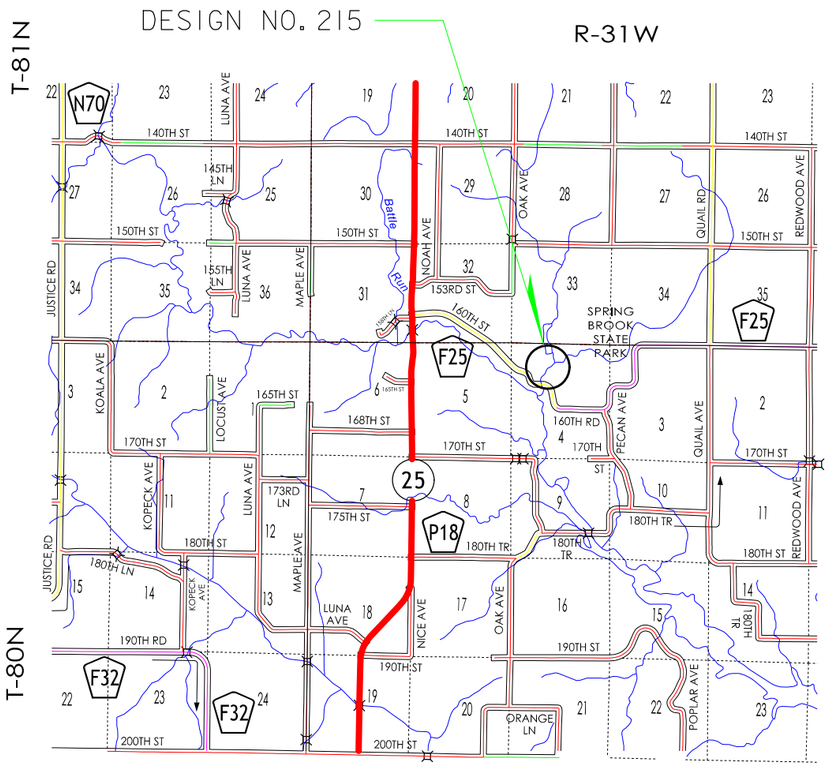

LOCATION MAP

PROJECT DIRECTORY NAME: 39650010 12

ENGLISH STANDARD BRIDGE PLANS

STANDARD	ISSUED	REVISED
J30-01A-06	11-06	06-13
J30-02E-06	11-06	04-13
J30-03E-06	11-06	07-09
J30-20-06	11-06	06-12
J30-21-06	11-06	07-09
J30-23-06	11-06	05-14
J30-24-06	11-06	07-09
J30-34-06	11-06	06-13
J30-39-06	11-06	07-09
J30-45-06	11-06	12-08
J30-46-06	11-06	09-14
J30-47-06	11-06	09-14

IOWA ONE CALL
1-800-292-8989
www.iowaonecall.com
811 Know what's below. Call before you dig.

STANDARD ROAD PLANS

STANDARD ROAD PLANS ARE LISTED ON SHEET NUMBER C.2

DESIGN DATA RURAL

2011	AADT	108	V.P.D.
2036	AADT	117	V.P.D.
2036	DHV		V.P.H.
TRUCKS		20	%
Total Design ESALs			

TOTAL SHEETS 36

PROJECT NUMBER
SP-650-0(9)--7C-39

R.O.W. PROJECT NUMBER

PROJECT IDENTIFICATION NUMBER
12-39-650-010

INDEX OF SHEETS

NO.	DESCRIPTION
1	TITLE SHEET
2	ESTIMATE SHEET - DESIGN 215
2-11	DESIGN 215
SPS.1	SOIL PROFILE SHEET
C.1	ESTIMATE SHEET FOR ROADWAY
A.1-W.6	ROADWAY SHEETS

REVISIONS

INDEX OF SEALS

SHEET NO.	NAME	TYPE
1	STEPHEN W. MOFFITT	STRUCTURAL DESIGN
1	WILLIAM L. KAUFMAN	HYDRAULIC DESIGN
A.1	BRIAN T. HIGGINBOTHAM	ROADWAY DESIGN
SPS.1	THERESA STROMBERG-MURPHY	GEOTECHNICAL DESIGN
BRIDGE STANDARDS	NORMAN L. McDONALD	STRUCTURAL DESIGN

ALL WORKING DRAWINGS, INCLUDING SHOP DRAWINGS AND FALSEWORK DRAWINGS, WILL BE CHECKED BY:

HGM ASSOCIATES, INC.
5022 SOUTH 114TH ST., SUITE 200
OMAHA, NE 68137
smoffitt@hgmonline.com

HYDRAULIC DESIGN

LICENSED PROFESSIONAL ENGINEER William L. Kaufman 15098 IOWA

I hereby certify that this engineering document was prepared by me or under my direct personal supervision and that I am a duly licensed Professional Engineer under the laws of the State of Iowa.

Signature: William L. Kaufman — Date: 5-12-2015

Printed or Typed Name: William L. Kaufman

My license renewal date is December 31, 2015

Pages or sheets covered by this seal: SHEET 5

STRUCTURAL DESIGN

LICENSED PROFESSIONAL ENGINEER Stephen W. Moffitt 13124 IOWA

I hereby certify that this engineering document was prepared by me or under my direct personal supervision and that I am a duly licensed Professional Engineer under the laws of the State of Iowa.

Signature: Stephen W. Moffitt — Date: 4-27-2015

Printed or Typed Name: Stephen W. Moffitt

My license renewal date is December 31, 2015

Pages or sheets covered by this seal: SHEETS 1 THRU 4 AND 6 THRU 11

ESTIMATED BRIDGE QUANTITIES

ITEM NO.	ITEM CODE	ITEM	UNIT	TOTAL	AS BUILT QUANTITY
1	2104-2710020	EXCAVATION, CLASS 10, CHANNEL	CY	444	
2	2401-6745650	REMOVAL OF EXISTING STRUCTURES	LS	1.00	
3	2402-2720000	EXCAVATION, CLASS 20	CY	73.0	
4	2403-0100010	STRUCTURAL CONCRETE (BRIDGE)	CY	152.2	
5	2404-7775000	REINFORCING STEEL	LB	102	
6	2404-7775005	REINFORCING STEEL, EPOXY COATED	LB	38,439	
7	2404-7775009	REINFORCING STEEL, STAINLESS STEEL	LB	1,834	
8	2414-6424124	CONCRETE OPEN RAILING, TL-4	LF	162	
9	2501-0201042	PILES, STEEL, HP 10 X 42	LF	790	
10	2501-5478042	CONCRETE ENCASEMENT OF STEEL H-PILES, HP10X42 (PIOL TYPE 3)	LF	146.3	
11	2507-3250005	ENGINEERING FABRIC	SY	399.5	
12	2507-6800061	REVETMENT, CLASS E	TON	361.9	
13	2533-4980005	MOBILIZATION	LS	1.00	

ESTIMATE REFERENCE INFORMATION

ITEM NO.	ITEM CODE	DESCRIPTION
1	2104-2710020	EXCAVATION, CLASS 10, CHANNEL ITEM INCLUDES COST TO CLEAR THE CHANNEL TO THE SHAPE, DEPTH, AND EXTENT SHOWN IN THE PLANS. QUANTITY OF EXCAVATION IS 2 CU. YDS. (CUT) AND 446 CU. YDS. (FILL + 40%). EXCESS MATERIAL MAY BE USED AS ROADWAY BORROW IF DEEMED SUITABLE BY THE ENGINEER. UNUSED MATERIAL SHALL BE DISPOSED OF OFF THE PROJECT SITE ACCORDING TO APPLICABLE FEDERAL, STATE, AND LOCAL REGULATIONS.
2	2401-6745650	REMOVAL OF EXISTING STRUCTURES ITEM IS FOR THE REMOVAL AND DISPOSAL OF THE EXISTING STRUCTURE (BRIDGE MAINTENANCE NO. 3900.4S650). THE STRUCTURE IS A FOUR CELLED 9'x5' REINFORCED CONCRETE BOX CULVERT. ALL STRUCTURAL ITEMS THAT ARE REMOVED SHALL BECOME THE PROPERTY OF THE CONTRACTOR, AND SHALL BE DISPOSED OF OFF THE PROJECT SITE ACCORDING TO APPLICABLE FEDERAL, STATE, AND LOCAL REGULATIONS.
3	2402-2720000	EXCAVATION, CLASS 20 ITEM INCLUDES EXCAVATION REQUIRED FOR CONSTRUCTION OF THE ABUTMENT FOOTINGS. SEE "SUMMARY OF EXCAVATION" TABLE ON DESIGN SHEET 3 FOR EXCAVATION QUANTITY AT EACH ABUTMENT.
4	2403-0100010	STRUCTURAL CONCRETE (BRIDGE) ITEM INCLUDES COST OF FURNISHING AND PLACING SUBDRAIN (INCLUDING EXCAVATION), GRANULAR BACKFILL, AND POROUS BACKFILL AT ABUTMENTS AND WING ARMORING. THE CONTRACTOR SHALL PROVIDE CERTIFIED PLANT INSPECTION FOR THE CONCRETE USED IN THE BRIDGE CONSTRUCTION. THE COST OF THIS INSPECTION SHALL BE INCIDENTAL TO THIS ITEM. INCLUDES COST OF FURNISHING AND PLACING CONCRETE SEALER AND ALL PREFORMED EXPANSION JOINT FILLER REQUIRED.
5	2404-7775000	REINFORCING STEEL SEE "SUMMARY OF REINFORCING STEEL" TABLE ON DESIGN SHEET 3.
6	2404-7775005	REINFORCING STEEL, EPOXY COATED SEE "SUMMARY OF REINFORCING STEEL" TABLE ON DESIGN SHEET 3.
7	2404-7775009	REINFORCING STEEL, STAINLESS STEEL SEE "SUMMARY OF REINFORCING STEEL" TABLE ON DESIGN SHEET 3.
8	2414-6424124	CONCRETE OPEN RAILING, TL-4 CERTIFIED PLANT INSPECTION IS REQUIRED. THE COST OF THIS INSPECTION SHALL BE INCIDENTAL TO THIS ITEM. All STRUCTURAL CONCRETE FOR THE RAIL IS TO BE CLASS C; SUBSTITUTION OF CLASS D CONCRETE IS NOT ALLOWED.
9	2501-0201042	PILE, STEEL, HP 10 X 42 SEE "SUMMARY OF BRIDGE QUANTITIES" TABLE ON DESIGN SHEET 2.
10	2501-5478042	CONCRETE ENCASEMENT OF STEEL H-PILES, HP10X42 (PIOL TYPE 3) PRICE BID FOR ENCASEMENT SHALL BE FULL PAYMENT FOR FOR NECESSARY EXCAVATION AND FOR FURNISHING AND PLACING ALL MATERIAL.
11	2507-3250005	ENGINEERING FABRIC ENGINEERING FABRIC SHALL BE PLACED UNDERNEATH AND AT THE LIMITS OF CLASS E REVETMENT. SEE DESIGN SHEET 5 FOR DETAILS.
12	2507-6800061	REVETMENT, CLASS E SEE DESIGN SHEET 5 FOR PLACEMENT DETAILS AND LIMITS.

ESTIMATE REFERENCE INFORMATION

ITEM NO.	ITEM CODE	DESCRIPTION
13	2533-4980005	MOBILIZATION --

BRIDGE DECK DIMENSION TABLE

NO.	ITEM	UNIT	QUANTITY
1	DECK LENGTH	L.F.	73.0
2	MINIMUM DECK WIDTH	L.F.	33.2
3	MAXIMUM DECK WIDTH	L.F.	33.2
4	DECK AREA	S.F.	2,423.6

NOTE:
ROADWAY QUANTITIES SHOWN ELSEWHERE IN THESE PLANS.

DESIGN FOR 0° SKEW

70'-0 X 30'-0 CONTINUOUS CONCRETE SLAB BRIDGE

21'-0 END SPANS 28'-0 INTERIOR SPAN

QUANTITIES & ERI NOTES

STA. 113+27.00 MAY, 2015

GUTHRIE COUNTY

IOWA DEPARTMENT OF TRANSPORTATION - HIGHWAY DIVISION

DESIGN SHEET NO. 1 OF 10 FILE NO. 31222 DESIGN NO. 215

GENERAL NOTES:

THIS DESIGN IS FOR THE REPLACEMENT OF THE EXISTING QUAD 9X4 RCB
REMOVALS SHALL BE IN ACCORDANCE WITH SECTION 2401 OF THE STANDARD
DESIGN NO. 215. PLANS OF THE EXISTING STRUCTURE WILL BE
THE LUMP SUM BID FOR "REMOVAL OF EXISTING BRIDGE" SHALL INCLUDE

THE BRIDGE IS DESIGNED FOR HL93 LOADING PLUS 20 LBS. PER SQ. FT. OF
ROADWAY FOR FUTURE WEARING SURFACE.

FAINT LINES ON PLANS INDICATE THE EXISTING STRUCTURE.

NOTE THAT WHEN APPROACH PAVEMENT IS TO BE PLACED, THE TEMPORARY PAVING
BLOCKS SHALL BE REMOVED AND A PROPER JOINT FOR EXPANSION SHALL BE PROVIDED
BETWEEN THE BRIDGE AND APPROACH PAVING.

THESE BRIDGE PLANS LABEL ALL REINFORCING STEEL WITH ENGLISH NOTATION (5a1
IS 5/8 INCH DIAMETER BAR). ENGLISH REINFORCING STEEL RECEIVED IN THE FIELD
MAY DISPLAY THE FOLLOWING "BAR DESIGNATION". THE "BAR DESIGNATION" IS THE
STAMPED IMPRESSION ON THE REINFORCING BARS, AND IS EQUIVALENT TO THE BAR
DIAMETER IN MILLIMETERS.

ENGLISH SIZE	3	4	5	6	7	8	9	10	11
BAR DESIGNATION	10	13	16	19	22	25	29	32	36

CONCRETE BARRIER RAILS PLACED USING THE SLIPFORM METHOD WILL REQUIRE THE
USE OF A CLASS BR CONCRETE IN ACCORDANCE WITH ARTICLE 2513.03 A.2 OF THE
STANDARD SPECIFICATIONS. CAST-IN-PLACE BARRIER RAILS SHALL USE CLASS C
MIX. CLASS D CONCRETE IS NOT PERMITTED FOR CONCRETE BARRIER RAILS
(CAST-IN-PLACE OR SLIPFORMED METHOD).

KEYWAY DIMENSIONS SHOWN ON THE PLANS ARE BASED ON NOMINAL DIMENSIONS
UNLESS STATED OTHERWISE. IN ADDITION, THE BEVEL USED ON THE KEYWAY SHALL
BE LIMITED TO A MAXIMUM OF 10 DEGREES FROM VERTICAL.

THE UTILITY COMPANIES WHOSE FACILITIES ARE SHOWN ON THE PLANS OR
KNOWN TO BE WITHIN THE CONSTRUCTION LIMITS SHALL BE NOTIFIED BY THE BRIDGE
CONTRACTOR OF THE CONSTRUCTION STARTING DATE.

SOUNDING AND TEST BORING DATA SHOWN ON THE PLANS WERE ACCUMULATED FOR
DESIGNING AND ESTIMATING PURPOSES. THEIR APPEARANCE ON THE PLANS DOES NOT
CONSTITUTE A GUARANTEE THAT CONDITIONS OTHER THAN THOSE INDICATED WILL NOT
BE ENCOUNTERED.

MINIMUM CLEAR DISTANCE FROM FACE OF CONCRETE TO NEAR REINFORCING BAR IS TO
BE 2" UNLESS OTHERWISE NOTED AS SHOWN.

EXPOSED CORNERS OF 90 DEGREES OR SHARPER SHALL BE FILLETED WITH A 3/4 INCH
DRESSED AND BEVELED STRIP.

THE BRIDGE CONTRACTOR WILL BE THE ONLY CONTRACTOR AT THE SITE AND IS
RESPONSIBLE FOR THE COMPLETION OF ALL WORK AS DETAILED AND NOTED IN THESE
PLANS.

ALL REINFORCING BARS AND BARS NOTED AS DOWELS SUPPLIED FOR THIS STRUCTURE
SHALL BE DEFORMED REINFORCEMENT UNLESS OTHERWISE NOTED OR SHOWN.

THE BRIDGE CONTRACTOR IS TO CLEAR AND/OR SHAPE THE CHANNEL WITHIN THE
APPROXIMATE LIMITS OF THE HATCHED AREAS AS SHOWN ON THE "SITUATION
PLAN" AND "LONGITUDINAL SECTION ALONG CENTERLINE ROADWAY" ON DESIGN
SHEET 4 AND 5.

IT SHALL BE THE BRIDGE CONTRACTOR'S RESPONSIBILITY TO PROVIDE SITES
FOR EXCESS EXCAVATED MATERIAL. NO PAYMENT FOR OVERHAUL WILL BE
ALLOWED FOR MATERIAL HAULED TO THESE SITES.

THE PIER PILE ENCASEMENTS ARE TO BE AS DETAILED AND NOTED ON
IOWA D.O.T. STANDARD PIOL, AS SHOWN IN THESE PLANS. THE UNIT
PRICE BID FOR ENCASEMENT SHALL BE FULL PAYMENT FOR FURNISHING
AND PLACING ALL MATERIAL AND NECESSARY EXCAVATION. THE PILING
ENCASEMENTS ARE TO EXTEND FROM THE BOTTOM OF PIER CAP TO THE
ELEVATION SHOWN.

THE COST OF FURNISHING AND PLACING SUBDRAIN (INCLUDING EXCAVATION),
FLOODABLE BACKFILL AND POROUS BACKFILL IS TO BE INCLUDED IN THE
PRICE BID FOR "STRUCTURAL CONCRETE".

SPECIFICATIONS FOR THIS PROJECT SHALL INCLUDE SPECIAL PROVISION SP-120302,
STAINLESS STEEL BARS FOR CONCRETE REINFORCMENT.

SCHEDULE OF OPERATION:

THE CONTRACTOR SHALL SUBMIT TO THE ENGINEER, PRIOR TO THE PRECONSTRUCTION CONFERENCE, A
WRITTEN SCHEDULE FOR PERFORMANCE OF THE WORK ITEMS. THE SCHEDULE SHALL BE IN THE FORM OF A
BAR GRAPH OR CHART SHOWING STARTING AND COMPLETION DATES FOR THE ITEMS. THE CONTRACTOR
SHALL THEN MAKE EVERY EFFORT TO CONFORM TO THE ACCEPTED SCHEDULE.

DRIVEN PILE NOTES

SOUTH ABUTMENT:

THE CONTRACT LENGTH OF 30 FEET FOR THE SOUTH ABUTMENT PILES IS BASED ON A
NON-COHESIVE SOIL CLASSIFICATION, A TOTAL FACTORED AXIAL LOAD PER PILE (PU) OF 75 KIPS,
AND A GEOTECHNICAL RESISTANCE FACTOR (PHI) OF 55 FOR SOIL AND 0.70 FOR ROCK
END BEARING.

THE NOMINAL AXIAL BEARING RESISTANCE FOR CONSTRUCTION CONTROL WAS DETERMINED
FROM A NON-COHESIVE SOIL CLASSIFICATION AND A GEOTECHNICAL RESISTANCE FACTOR (PHI)
OF 0.55 FOR SOIL AND 0.70 FOR ROCK END BEARING.

THE REQUIRED NOMINAL AXIAL BEARING RESISTANCE FOR SOUTH ABUTMENT PILES IS
55 TONS AT END OF DRIVE OR RETAP. THE PILE CONTRACT LENGTH SHALL BE DRIVEN
AS PER PLAN UNLESS PILES REACH REFUSAL. CONSTRUCTION CONTROL REQUIRES A WEAP
ANALYSIS WITH BEARING GRAPH.

PIER NO. 1:

THE CONTRACT LENGTH OF 35 FEET FOR THE PIER NO. 1 PILES IS BASED ON A NON-COHESIVE SOIL
CLASSIFICATION, A TOTAL FACTORED AXIAL LOAD PER PILE (PU) OF 90 KIPS, AND A
GEOTECHNICAL RESISTANCE FACTOR (PHI) OF 0.55 FOR SOIL AND 0.70 FOR ROCK END
BEARING.

THE NOMINAL AXIAL BEARING RESISTANCE FOR CONSTRUCTION CONTROL WAS DETERMINED
FROM A NON-COHESIVE SOIL CLASSIFICATION AND A GEOTECHNICAL RESISTANCE FACTOR (PHI) OF
0.55 FOR SOIL AND 0.70 FOR ROCK END BEARING. DESIGN SCOUR WAS ASSUMED TO
AFFECT THE UPPER 8 FEET OF EMBEDDED PILE LENGTH AND CAUSE 9 KIPS OF
DRIVING RESISTANCE.

THE REQUIRED NOMINAL AXIAL BEARING RESISTANCE FOR PIER NO. 1 PILES IS 70 TONS
AT END OF DRIVE OR RETAP. THE PILE CONTRACT LENGTH SHALL BE DRIVEN AS
PER PLAN UNLESS PILES REACH REFUSAL. CONSTRUCTION CONTROL REQUIRES A WEAP
ANALYSIS WITH BEARING GRAPH.

PIER NO. 2:

THE CONTRACT LENGTH OF 35 FEET FOR THE PIER NO. 2 PILES IS BASED ON A NON-COHESIVE SOIL
CLASSIFICATION, A TOTAL FACTORED AXIAL LOAD PER PILE (PU) OF 90 KIPS, AND A
GEOTECHNICAL RESISTANCE FACTOR (PHI) OF 0.55 FOR SOIL AND 0.70 FOR ROCK END
BEARING.

THE NOMINAL AXIAL BEARING RESISTANCE FOR CONSTRUCTION CONTROL WAS DETERMINED
FROM A NON-COHESIVE SOIL CLASSIFICATION AND A GEOTECHNICAL RESISTANCE FACTOR (PHI) OF
0.55 FOR SOIL AND 0.70 FOR ROCK END BEARING. DESIGN SCOUR WAS ASSUMED TO
AFFECT THE UPPER 8 FEET OF EMBEDDED PILE LENGTH AND CAUSE 9 KIPS OF
DRIVING RESISTANCE.

THE REQUIRED NOMINAL AXIAL BEARING RESISTANCE FOR PIER NO.2 PILES IS 70 TONS
AT END OF DRIVE OR RETAP. THE PILE CONTRACT LENGTH SHALL BE DRIVEN AS
PER PLAN UNLESS PILES REACH REFUSAL. CONSTRUCTION CONTROL REQUIRES A WEAP
ANALYSIS WITH BEARING GRAPH.

NORTH ABUTMENT:

THE CONTRACT LENGTH OF 30 FEET FOR THE NORTH ABUTMENT PILES IS BASED ON A
NON-COHESIVE SOIL CLASSIFICATION, A TOTAL FACTORED AXIAL LOAD PER PILE (PU) OF 75 KIPS,
AND A GEOTECHNICAL RESISTANCE FACTOR (PHI) OF 0.55 FOR SOIL AND 0.70 FOR ROCK
END BEARING.

THE NOMINAL AXIAL BEARING RESISTANCE FOR CONSTRUCTION CONTROL WAS DETERMINED
FROM A NON-COHESIVE SOIL CLASSIFICATION AND A GEOTECHNICAL RESISTANCE FACTOR (PHI)
OF 0.55 FOR SOIL AND 0.70 FOR ROCK END BEARING.

THE REQUIRED NOMINAL AXIAL BEARING RESISTANCE FOR NORTH ABUTMENT PILES IS
55 TONS AT END OF DRIVE OR RETAP.THE PILE CONTRACT LENGTH SHALL BE DRIVEN
AS PER PLAN UNLESS PILES REACH REFUSAL. CONSTRUCTION CONTROL REQUIRES A WEAP
ANALYSIS WITH BEARING GRAPH.

SPECIFICATIONS:

DESIGN: AASHTO LRFD 6th ED, SERIES OF 2012, EXCEPT AS NOTED IN THE CURRENT
IOWA BRIDGE DESIGN MANUAL.

CONSTRUCTION: IOWA DEPARTMENT OF TRANSPORTATION STANDARD SPECIFICATIONS
FOR HIGHWAY AND BRIDGE CONSTRUCTION, SERIES 2012, PLUS
APPLICABLE GENERAL SUPPLEMENTAL SPECIFICATIONS,
DEVELOPMENTAL SPECIFICATIONS, SUPPLEMENTAL SPECIFICATIONS
AND SPECIAL PROVISIONS SHALL APPLY TO CONSTRUCTION WORK
ON THIS PROJECT.

DESIGN STRESSES:

DESIGN STRESSES FOR THE FOLLOWING MATERIALS ARE IN ACCORDANCE WITH
THE AASHTO LRFD BRIDGE DESIGN SPECIFICATIONS, 6th ED, SERIES 2012,
EXCEPT AS NOTED IN THE CURRENT IOWA BRIDGE DESIGN MANUAL.

REINFORCING STEEL IN ACCORDANCE WITH AASHTO SECTION 5, GRADE 60.
CONCRETE IN ACCORDANCE WITH LRFD AASHTO SECTION 5, f'c = 4.0 KSI.
STRUCTURAL STEEL IN ACCORDANCE WITH LRFD AASHTO SECTION 6.
ASTM A709 GRADE 36, GRADE 50, AND GRADE 50W
(AASHTO M270 GRADE 36, GRADE 50, AND GRADE 50W).

NOTE:
POLLUTION PREVENTION PLAN
SHOWN ELSEWHERE IN THESE
PLANS.

TRAFFIC CONTROL PLAN

NOTE: THE ROADWAY WILL BE CLOSED
TO THRU TRAFFIC. REFER TO
THE TRAFFIC CONTROL PLAN SHOWN
ELSEWHERE IN THESE PLANS.

DESIGN FOR 0° SKEW

70'-0 X 30'-0 CONTINUOUS CONCRETE SLAB BRIDGE

21'-0 END SPANS 28'-0 INTERIOR SPAN

GENERAL NOTES

STA. 113+27.00 MAY, 2015

GUTHRIE COUNTY

IOWA DEPARTMENT OF TRANSPORTATION - HIGHWAY DIVISION

DESIGN SHEET NO. 2 OF 10 FILE NO. 31222 DESIGN NO. 215

SUMMARY OF CONCRETE QUANTITIES

LOCATION	STRUCTURAL CONCRETE	HPC STRUCTURAL CONCRETE
S ABUTMENT FOOTING	11.1	--
N ABUTMENT FOOTING	11.1	--
SUPERSTRUCTURE	130.0	--
TOTAL (CU. YDS.)	152.2	--

SUMMARY OF REINFORCING STEEL

LOCATION	NON-COATED REINFORCING STEEL	STAINLESS STEEL REINFORCING STEEL	EPOXY COATED REINFORCING STEEL
S ABUTMENT FOOTING	51	--	1,507
N ABUTMENT FOOTING	51	--	1,507
SUPERSTRUCTURE	--	--	32,327
OPEN RAIL	--	1,834	3,098
TOTAL (LBS.)	102	1,834	38,439

SUMMARY OF EXCAVATION

LOCATION	CLASS 20 EXCAVATION	CLASS 21 EXCAVATION
S ABUTMENT FOOTING	36.5	--
N ABUTMENT FOOTING	36.5	--
TOTAL (CU. YDS.)	73.0	--

SUMMARY OF FOUNDATIONS

LOCATION	SUBSTRUCTURE TYPE	FOUNDATION TYPE	NUMBER	LENGTH (LIN. FT.)	TOTAL (LIN. FT.)
S ABUTMENT	INTEGRAL ABUTMENT	HP10X42	5	30	150
N ABUTMENT	INTEGRAL ABUTMENT	HP10X42	5	30	150
PIER NO. 1	P10L - TYPE 3	HP10X42	7	35	245
PIER NO. 2	P10L - TYPE 3	HP10X42	7	35	245
		TOTAL (LIN. FT.)			790

DESIGN FOR 0° SKEW

70'-0 X 30'-0 CONTINUOUS CONCRETE SLAB BRIDGE

21'-0 END SPANS 28'-0 INTERIOR SPAN

SUMMARY QUANTITIES

STA. 113+27.00 MAY, 2015

GUTHRIE COUNTY

IOWA DEPARTMENT OF TRANSPORTATION - HIGHWAY DIVISION

DESIGN SHEET NO. 3 OF 10 FILE NO. 31222 DESIGN NO. 215

BENCH MARK NO. 501 - SAW X ON PCC STRUCTURE AROUND MH, S. SIDE OF RESTROOMS, NE OF CAMPSITE AREA. EL. 1070.57

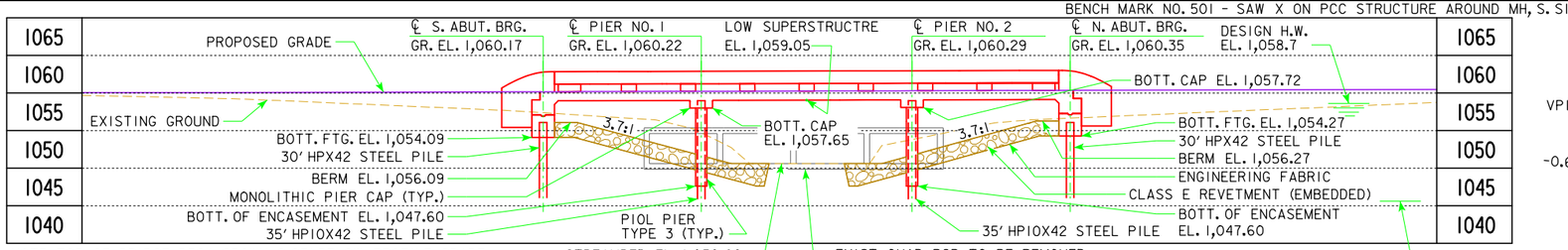

NOTE: TOP OF BRIDGE DECK CROWN 0.03' BELOW PROFILE GRADE.

LONGITUDINAL SECTION ALONG ℄ ROADWAY

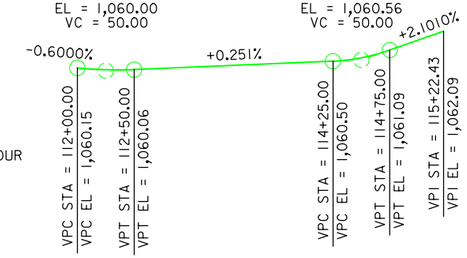

PROPOSED PROFILE GRADE
IA 650

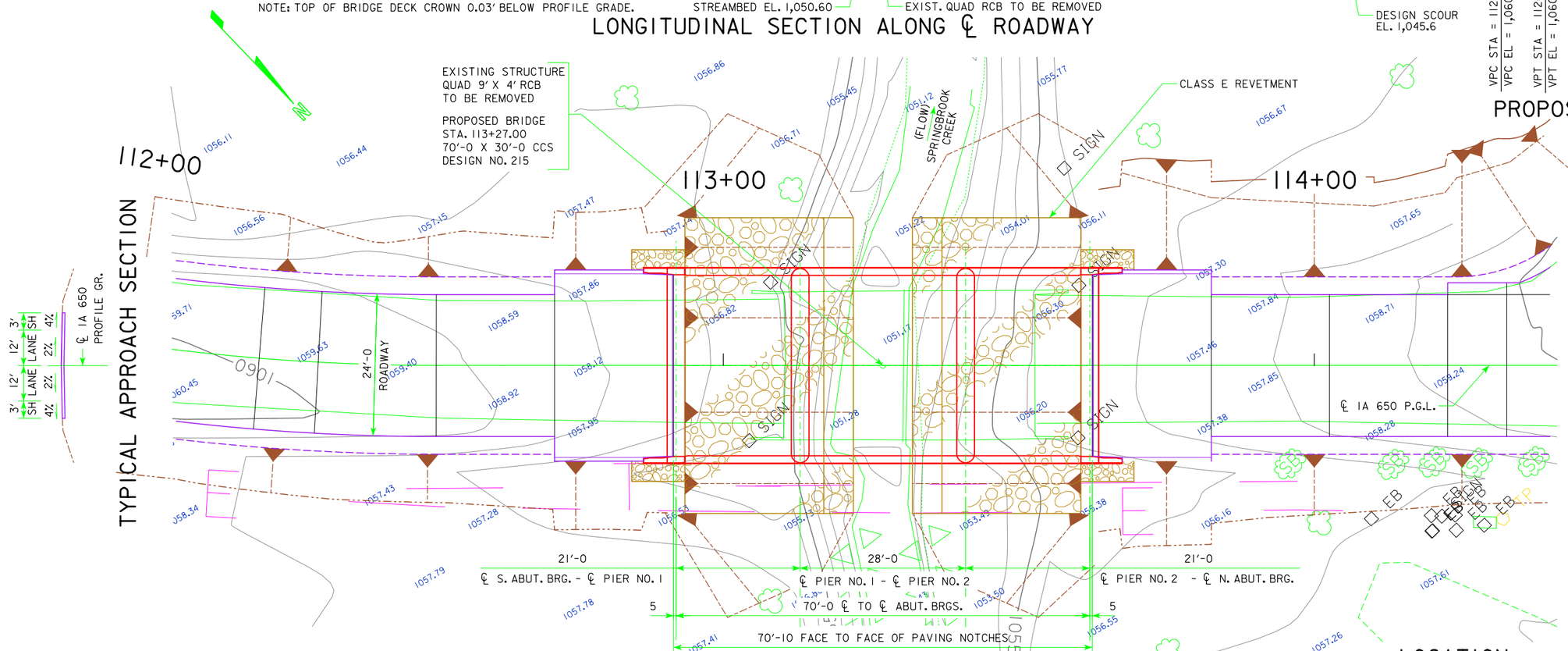

SITUATION PLAN

TYPICAL APPROACH SECTION

HYDRAULIC DATA

DRAINAGE AREA = 7.9 SQ. MI.
STREAM SLOPE = 11.6 FT./MI.

Q_2 = 400 CFS
STAGE = EL. 1,056.3
CHANNEL VELOCITY = 2.5 FPS

Q_{50} = 2,490 CFS
STAGE = EL. 1,058.5
BACKWATER = 0.73 FT.
AVG. BRIDGE VELOCITY = 6.5 FPS

Q_{100} = 2,970 CFS
STAGE = EL. 1,058.7
BACKWATER = 0.91 FT.
DESIGN SCOUR = 1,045.6

Q_{200} = 3,870 CFS
STAGE = EL. 1,059.7
CHECK SCOUR = 1,045.0

Q_{500} = 4,300 CFS

$Q_{OVERTOP}$ = 2,350 CFS
ROADWAY OVERTOP EL. = 1,060.1

CHECK SCOUR REPRESENTS
MAXIMUM EXPECTED SCOUR.

LOCATION

IA 650 OVER SPRINGBROOK CREEK
SPRINGBROOK STATE PARK
T-80N R-31W
SECTION 4
VICTORY TOWNSHIP
GUTHRIE COUNTY
FHWA NO. 699201
BRIDGE MAINT. NO. 3900.4S650
LATITUDE 41.772433°
LONGITUDE -94.467483°

TRAFFIC ESTIMATE

2011 AADT	108	V.P.D.
2036 AADT	177	V.P.D.
2036 DHV		V.P.H.
TRUCKS	20	%
TOTAL DESIGN ESALs		

UTILITIES LEGEND:

(GII) WINDSTREAM COMMUNICATIONS
CONTACT NAME: JOEL SCHROEDER
CONTACT PHONE: 8002891901
CONTACT EMAIL: locate.desk@windstream.com

(GCT) GUTHRIE COUNTY RURAL ELECTRIC
CONTACT NAME: MARVIN LEMKE
CONTACT PHONE: 5157472206

(GTN) GUTHRIE TELECOMMUNICATIONS NET
CONTACT NAME: ANDREW M. RANDOL
CONTACT PHONE: 6413322000
CONTACT EMAIL: panora@netins.net

DESIGN FOR 0° SKEW

70'-0 X 30'-0 CONTINUOUS CONCRETE SLAB BRIDGE

21'-0 END SPANS 28'-0 INTERIOR SPAN

SITUATION PLAN

STA. 113+27.00 MAY, 2015

GUTHRIE COUNTY

IOWA DEPARTMENT OF TRANSPORTATION - HIGHWAY DIVISION

DESIGN SHEET NO. 4 OF 10 FILE NO. 31222 DESIGN NO. 215

BENCH MARK NO. 501 - SAW X ON PCC STRUCTURE AROUND MH, S. SIDE OF RESTROOMS, NE OF CAMPSITE AREA. EL. 1070.57

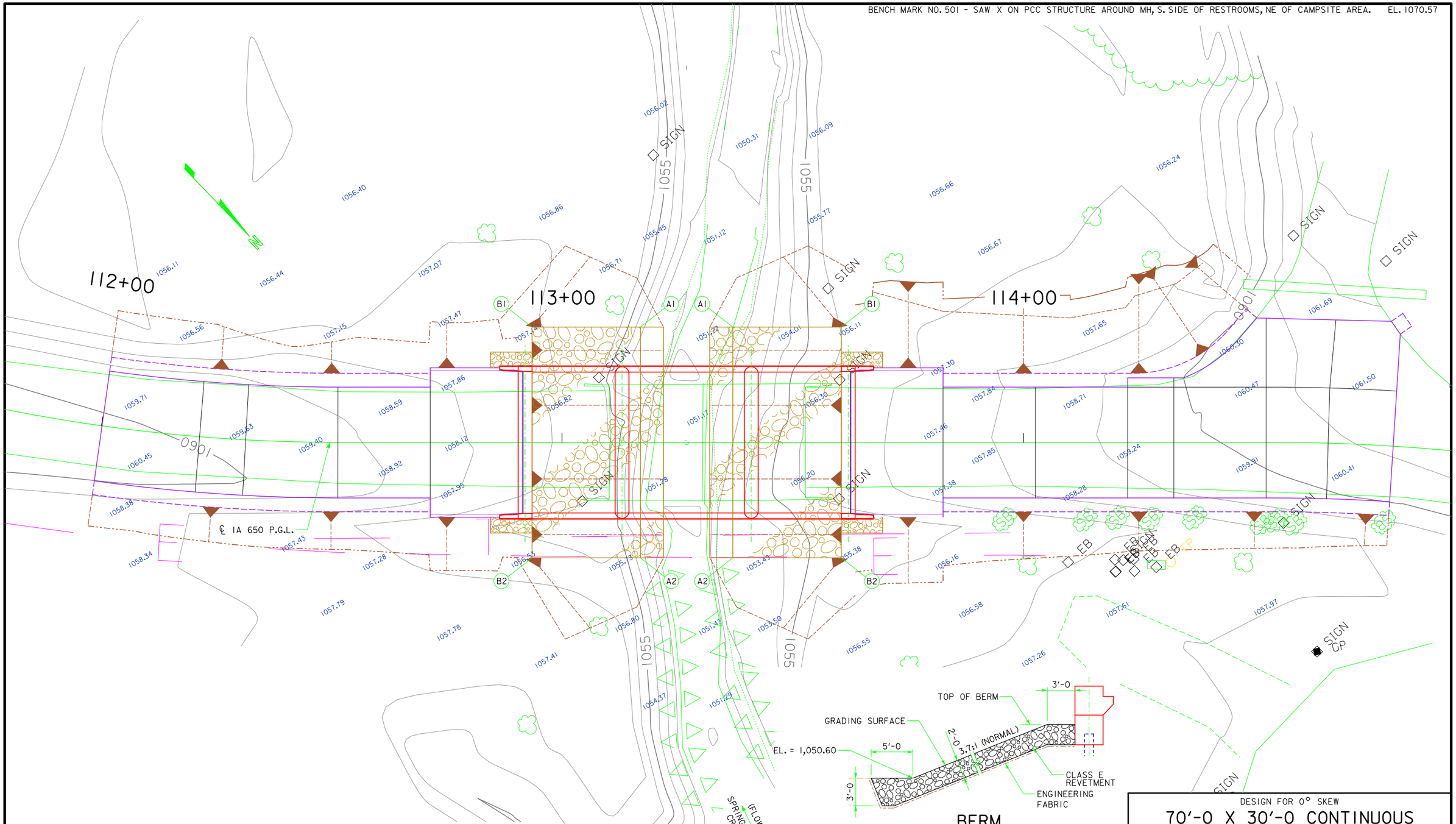

BERM SLOPE LOCATION TABLE

	SOUTH ABUTMENT			NORTH ABUTMENT		
PTS.	STATION	OFFSET	ELEV	STATION	OFFSET	ELEV
A1	113+17.00	25' LT.	1,050.60	113+37.00	25' LT.	1,050.60
A2	113+17.00	25' RT.	1,050.60	113+37.00	25' RT.	1,050.60
B1	112+93.50	25' LT.	1,056.09	113+60.50	25' LT.	1,056.27
B2	112+93.50	25' RT.	1,056.09	113+60.50	25' RT.	1,056.27

ESTIMATED REVETMENT QUANTITIES

ITEM	UNIT	QUANTITY
CLASS E REVETMENT	TONS	361.9
ENGINEERING FABRIC	SY	399.5
EXCAVATION, CL. 10	CY	444

BERM REVETMENT DETAIL

NORMAL TO CHANNEL

DESIGN FOR 0° SKEW

70'-0 X 30'-0 CONTINUOUS CONCRETE SLAB BRIDGE

21'-0 END SPANS 28'-0 INTERIOR SPAN

SITUATION PLAN - SITE

STA. 113+27.00 MAY, 2015

GUTHRIE COUNTY

IOWA DEPARTMENT OF TRANSPORTATION - HIGHWAY DIVISION

DESIGN SHEET NO. 5 OF 10 FILE NO. 31222 DESIGN NO. 215

DESIGN TEAM hgm | GUTHRIE COUNTY | PROJECT NUMBER SP-650-0(9)--7C-39 | SHEET NUMBER 6

4/22/2015 8:26:26 AM jlk Z:\Projects\790015A IDOT - Springbrook Park Site 1\CADD\dgn\Final\39650008.brg 390215S005p 11x17_pdf.pltcfg

BENCH MARK NO. 501 - SAW X ON PCC STRUCTURE AROUND MH, S. SIDE OF RESTROOMS, NE OF CAMPSITE AREA. EL. 1070.57

TOP OF SLAB ELEVATIONS

LOCATION	℄ SOUTH ABUTMENT BEARING				℄ PIER NO.1				℄ PIER NO. 2				℄ NORTH ABUTMENT BEARING
	LINE 1	LINE 2	LINE 3	LINE 4	LINE 5	LINE 6	LINE 7	LINE 8	LINE 9	LINE 10	LINE 11	LINE 12	LINE 13
WEST GUTTER LINE	1059.83	1059.85	1059.86	1059.87	1059.89	1059.90	1059.92	1059.94	1059.96	1059.97	1059.98	1060.00	1060.01
INTERMEDIATE LINE A	1059.97	1059.98	1060.00	1060.01	1060.02	1060.04	1060.06	1060.08	1060.09	1060.11	1060.12	1060.13	1060.15
CROWN LINE B	1060.10	1060.12	1060.13	1060.14	1060.16	1060.18	1060.19	1060.21	1060.23	1060.24	1060.26	1060.27	1060.28
℄ APPROACH RDWY.	1060.14	1060.15	1060.16	1060.18	1060.19	1060.21	1060.22	1060.24	1060.26	1060.27	1060.29	1060.30	1060.31
CROWN LINE C	1060.10	1060.12	1060.13	1060.14	1060.16	1060.18	1060.19	1060.21	1060.23	1060.24	1060.26	1060.27	1060.28
INTERMEDIATE LINE D	1059.97	1059.98	1060.00	1060.01	1060.02	1060.04	1060.06	1060.08	1060.09	1060.11	1060.12	1060.13	1060.15
EAST GUTTER LINE	1059.83	1059.85	1059.86	1059.87	1059.89	1059.90	1059.92	1059.94	1059.96	1059.97	1059.98	1060.00	1060.01

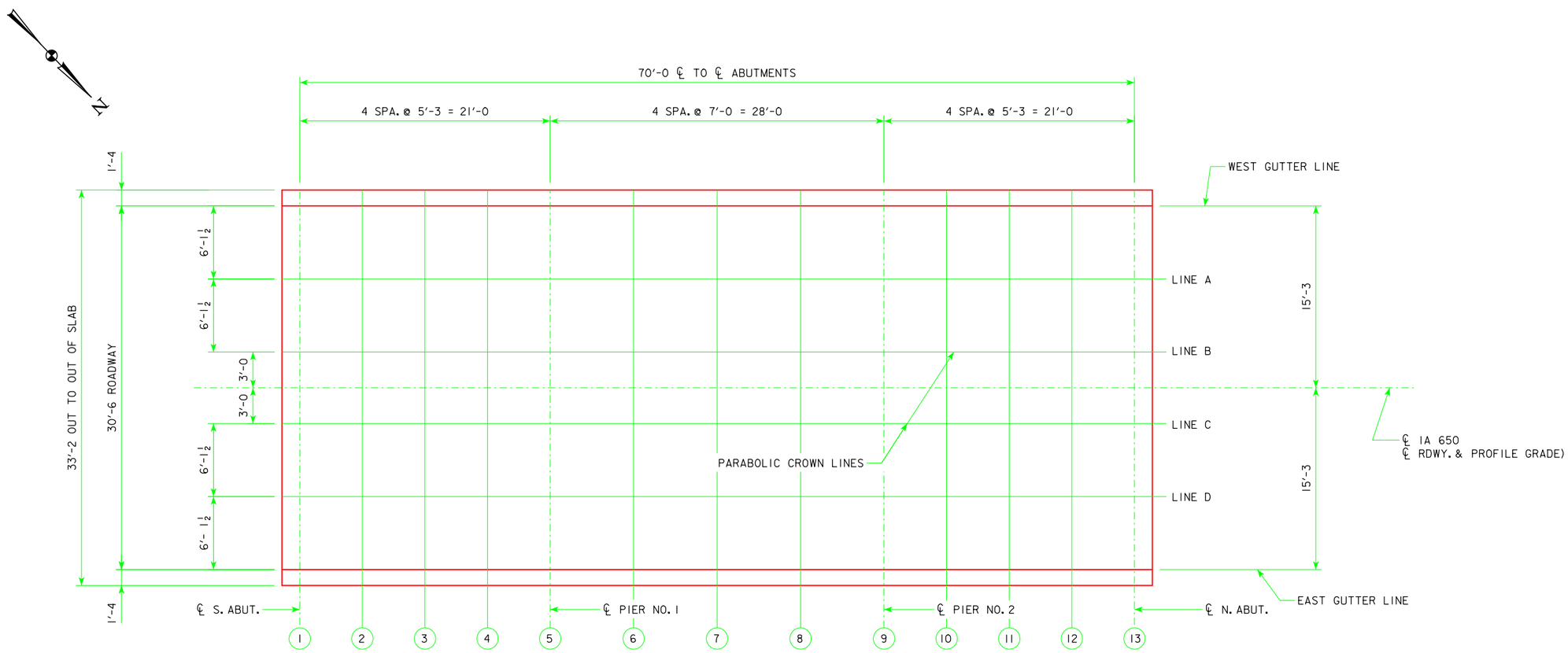

SLAB ELEVATION PLAN

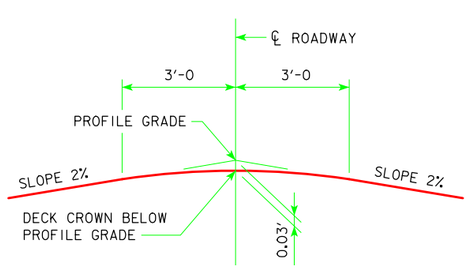

CROWN TEMPLATE

NO SCALE

DESIGN FOR 0° SKEW

70'-0 X 30'-0 CONTINUOUS CONCRETE SLAB BRIDGE

21'-0 END SPANS 28'-0 INTERIOR SPAN

SUPERSTRUCTURE DETAILS

STA. 113+27.00 MAY, 2015

GUTHRIE COUNTY

IOWA DEPARTMENT OF TRANSPORTATION - HIGHWAY DIVISION

DESIGN SHEET NO. 6 OF 10 FILE NO. 31222 DESIGN NO. 215

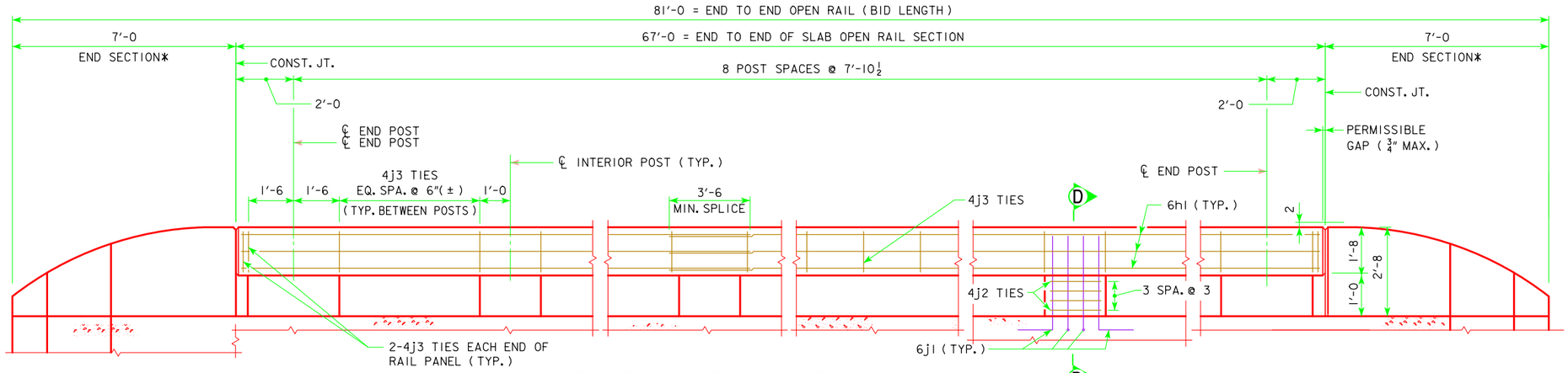

*NOTE:
SEE DESIGN SHEET NO. 7 FOR DETAILS OF ROUNDED END SECTIONS.

ELEVATION OF OPEN RAIL LAYOUT

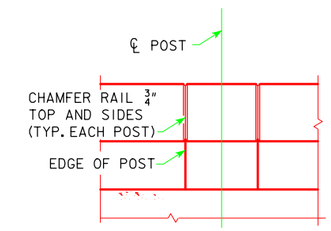

RAIL CHAMFER DETAIL

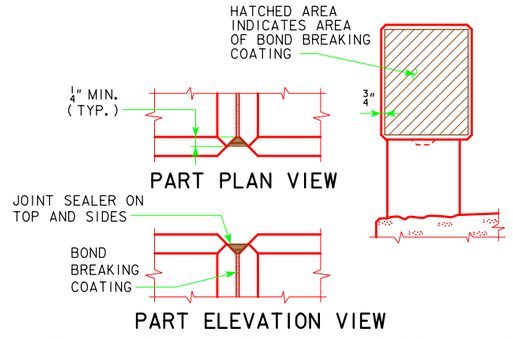

PART PLAN VIEW

PART ELEVATION VIEW

JOINT DETAILS AT END SECTION

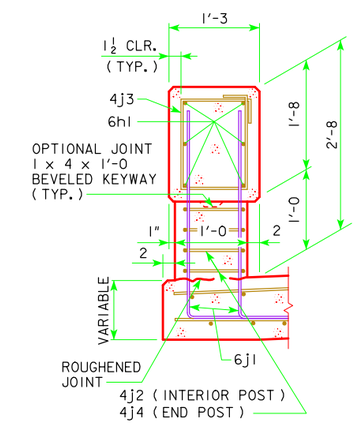

PART SECTION D-D

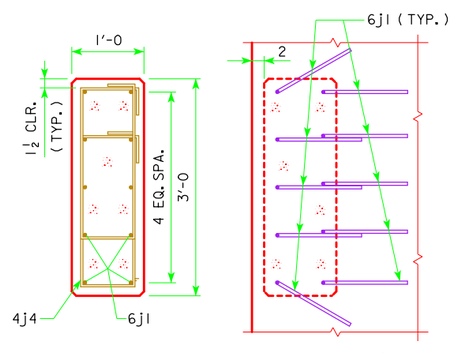

END POST DETAILS (REQUIRED AT ENDS OF OPEN RAIL)

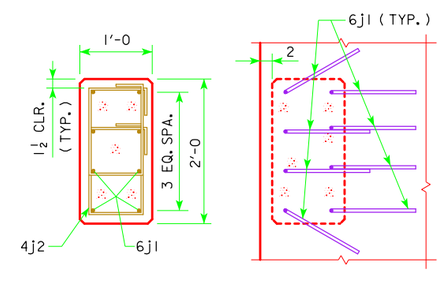

INTERIOR POST DETAILS

DESIGN FOR 0° SKEW

70'-0 X 30'-0 CONTINUOUS CONCRETE SLAB BRIDGE

21'-0 END SPANS 28'-0 INTERIOR SPAN

OPEN RAIL DETAILS

STA. 113+27.00 MAY, 2015

GUTHRIE COUNTY

IOWA DEPARTMENT OF TRANSPORTATION - HIGHWAY DIVISION

DESIGN SHEET NO. 7 OF 10 FILE NO. 31222 DESIGN NO. 215

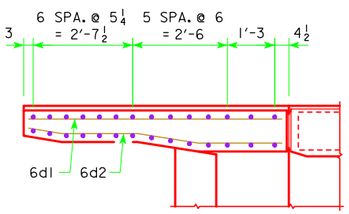

PART PLAN SECTION

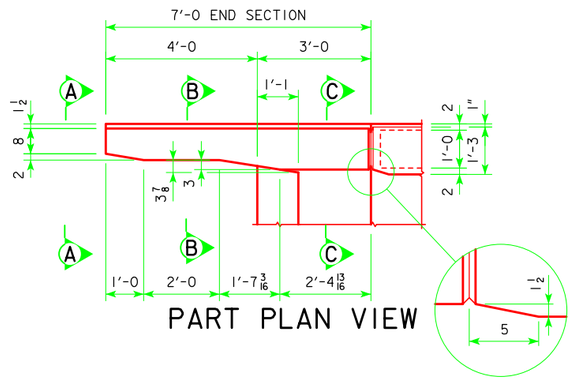

PART PLAN VIEW

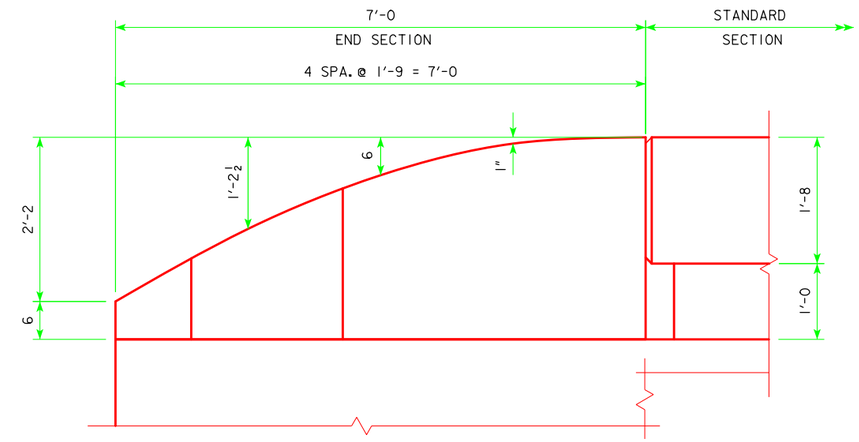

PART ELEVATION

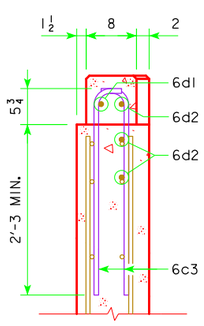

VIEW A-A

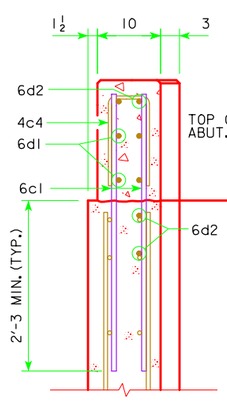

SECTION B-B

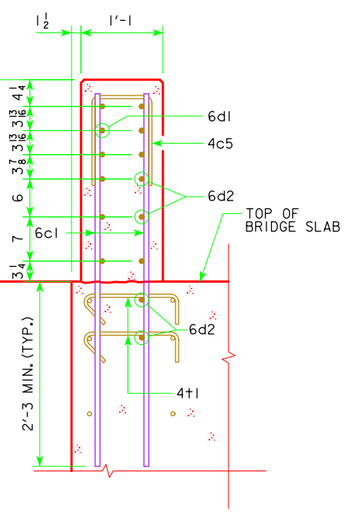

SECTION C-C

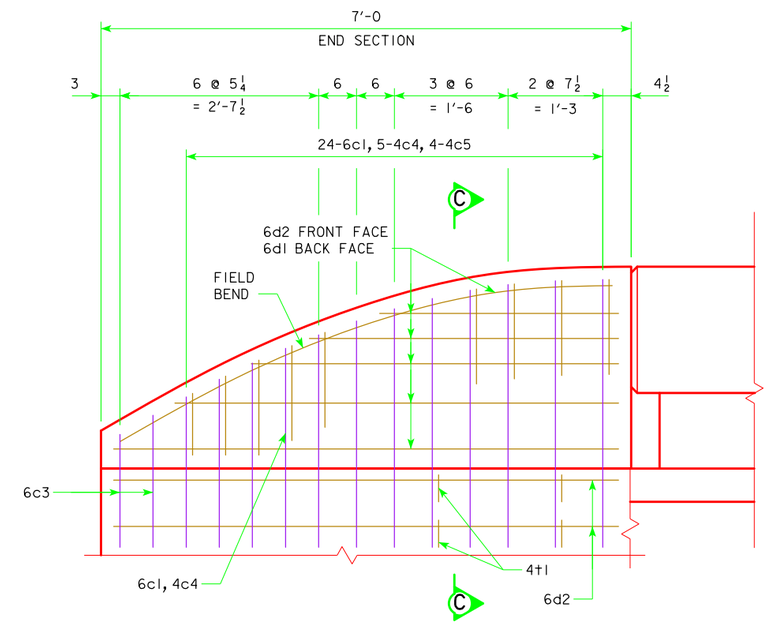

ROUNDED END SECTION
PART ELEVATION VIEW

DESIGN FOR 0° SKEW

70'-0 X 30'-0 CONTINUOUS CONCRETE SLAB BRIDGE

21'-0 END SPANS 28'-0 INTERIOR SPAN

ABUTMENT WING DETAILS

STA. 113+27.00 MAY, 2015

GUTHRIE COUNTY

IOWA DEPARTMENT OF TRANSPORTATION - HIGHWAY DIVISION

DESIGN SHEET NO. 8 OF 10 FILE NO. 31222 DESIGN NO. 215

EPOXY REINFORCING STEEL-TWO OPEN RAILS

BAR	LOCATION	SHAPE	NO.	LENGTH	WEIGHT
4c4	VERTICAL HOOPS		20	2'-10	38
4c5	VERTICAL HOOPS		16	3'-1	33
6d1	HORIZONTAL		24	VARIES	192
6d2	HORIZONTAL		32	VARIES	272
6h1	LONGITUDINAL OPEN RAIL		24	35'-9	1289
4j2	HOOPS INTERIOR POSTS		112	4'-8	349
4j3	HOOPS OPEN RAIL		212	5'-5	767
4j4	HOOPS END POSTS		32	6'-5	137
4t1	WING FOOTING TIE BARS		16	VARIES	21
(INCLUDE WITH SUPERSTRUCTURE REINFORCING)			TOTAL (LBS.)		3098

STAINLESS STEEL REINF. STEEL-TWO RAILS

BAR	LOCATION	SHAPE	NO.	LENGTH	WEIGHT
6c1	VERTICAL		96	4'-11	709
6c3	VERTICAL		16	4'-1	98
6j1	VERTICAL DOWELS OPEN RAIL		152	4'-6	1,027
(INCLUDE WITH SUPERSTRUCTURE REINFORCING)			TOTAL (LBS.)		1,834

BENT BAR DETAILS

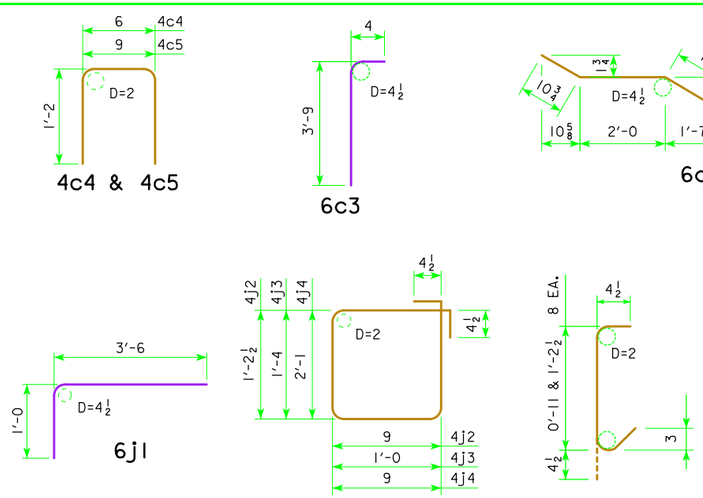

NOTE: ALL DIMENSIONS ARE OUT TO OUT.
D = PIN DIAMETER

CONCRETE PLACEMENT QUANTITIES

STANDARD SECTION CU. YDS.	12.2
END SECTION 4 @ 0.428 CU. YDS.	1.7
TOTAL CU. YDS.	13.9

CONCRETE OPEN RAIL QUANTITIES

BRIDGE LENGTH	UNIT	QUANTITY
CONCRETE OPEN RAILING, TL-4	L.F.	162.0

OPEN RAIL NOTES:

MINIMUM CLEAR DISTANCE FROM FACE OF CONCRETE TO NEAR REINFORCING BAR IS TO BE 2" UNLESS OTHERWISE NOTED OR SHOWN.

COST OF THE JOINT SEALER AND BOND BREAKER SHALL BE CONSIDERED INCIDENTAL TO OTHER CONSTRUCTION.

THE CONCRETE OPEN RAIL IS TO BE BID ON A LINEAL FOOT BASIS MEASURED FROM END TO END OF RAIL. THE NUMBER OF LINEAL FEET OF OPEN RAIL INSTALLED WILL BE PAID FOR AT THE CONTRACT PRICE PER LINEAL FOOT. PRICE BID FOR "CONCRETE OPEN RAILING, TL-4" SHALL BE FULL COMPENSATION FOR FURNISHING ALL MATERIAL, EXCLUDING REINFORCING STEEL, AND ALL OF THE EQUIPMENT AND LABOR REQUIRED TO CONSTRUCT THE RAIL IN ACCORDANCE WITH THESE PLANS AND CURRENT SPECIFICATIONS.

ALL OPEN RAIL REINFORCING STEEL IS TO BE INCLUDED WITH THE SUPERSTRUCTURE REINFORCING STEEL.

ALL OPEN RAIL CONCRETE IS TO BE CLASS C.

IF PLANS SPECIFY THAT THE REINFORCING STEEL IN THE SLAB BE EPOXY COATED, ALL OPEN RAIL REINFORCING STEEL SHALL ALSO BE EPOXY COATED. OTHERWISE THE OPEN RAIL REINFORCING SHALL NOT BE EPOXY COATED.

THE JOINT SEALER SHALL BE LIGHT GRAY NONSAG LATEX CAULKING SEALER MARKETED FOR OUTDOOR USE. NO TESTING OR CERTIFICATION IS REQUIRED.

TOP OF THE OPEN RAIL IS TO BE PARALLEL TO THEORETICAL ℄ GRADE.

IF CONDUIT IS REQUIRED IN THIS PLAN THE RIGID STEEL CONDUIT, JUNCTION BOXES AND FITTINGS INCLUDING LABOR AND ANY ADDITIONAL WORK TO DO THE INSTALLATION IS CONSIDERED INCIDENTAL TO THE COST OF THE RAILING.

DESIGN FOR 0° SKEW

70'-0 X 30'-0 CONTINUOUS CONCRETE SLAB BRIDGE

21'-0 END SPANS 28'-0 INTERIOR SPAN

OPEN RAIL DETAILS

STA. 113+27.00 MAY, 2015

GUTHRIE COUNTY

IOWA DEPARTMENT OF TRANSPORTATION - HIGHWAY DIVISION

DESIGN SHEET NO. 9 OF 10 FILE NO. 31222 DESIGN NO. 215

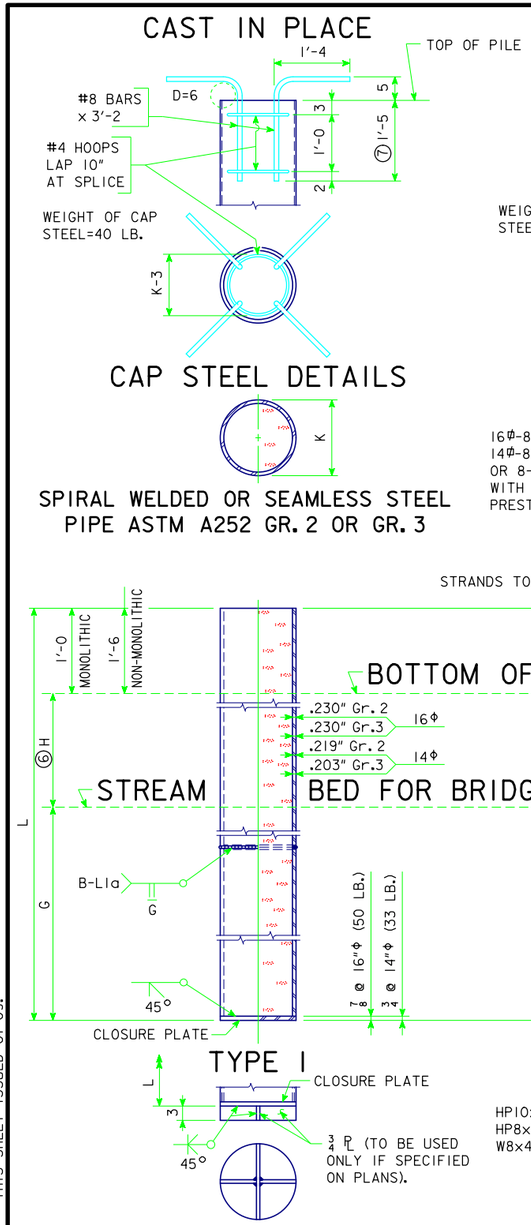

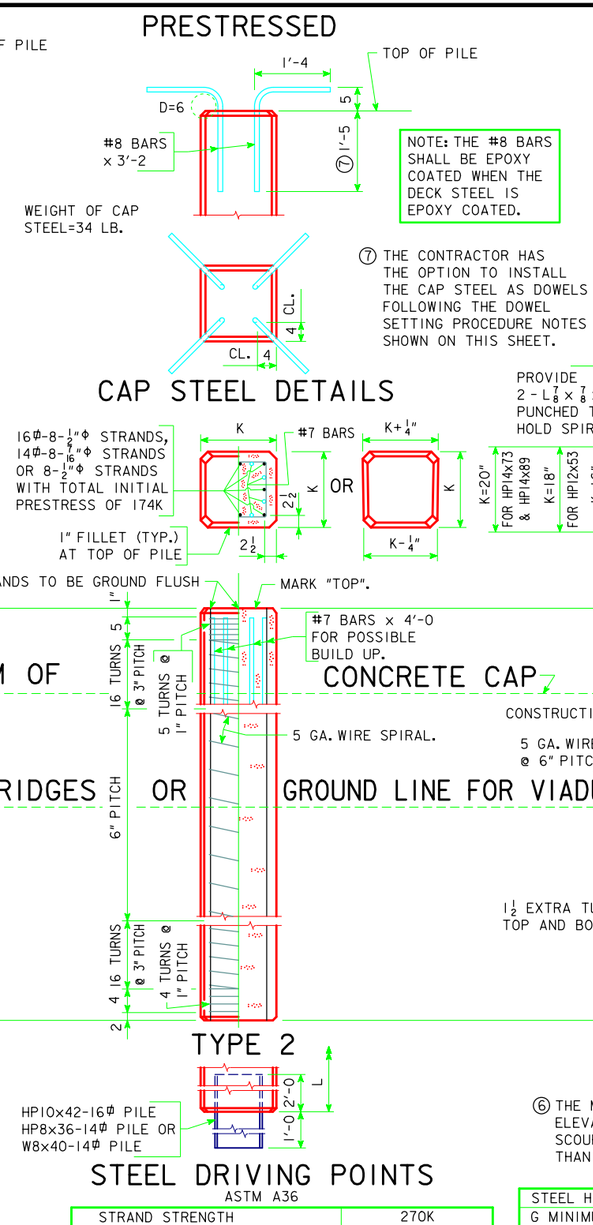

NOTE: THE #8 BARS SHALL BE EPOXY COATED WHEN THE DECK STEEL IS EPOXY COATED.

⑦ THE CONTRACTOR HAS THE OPTION TO INSTALL THE CAP STEEL AS DOWELS FOLLOWING THE DOWEL SETTING PROCEDURE NOTES SHOWN ON THIS SHEET.

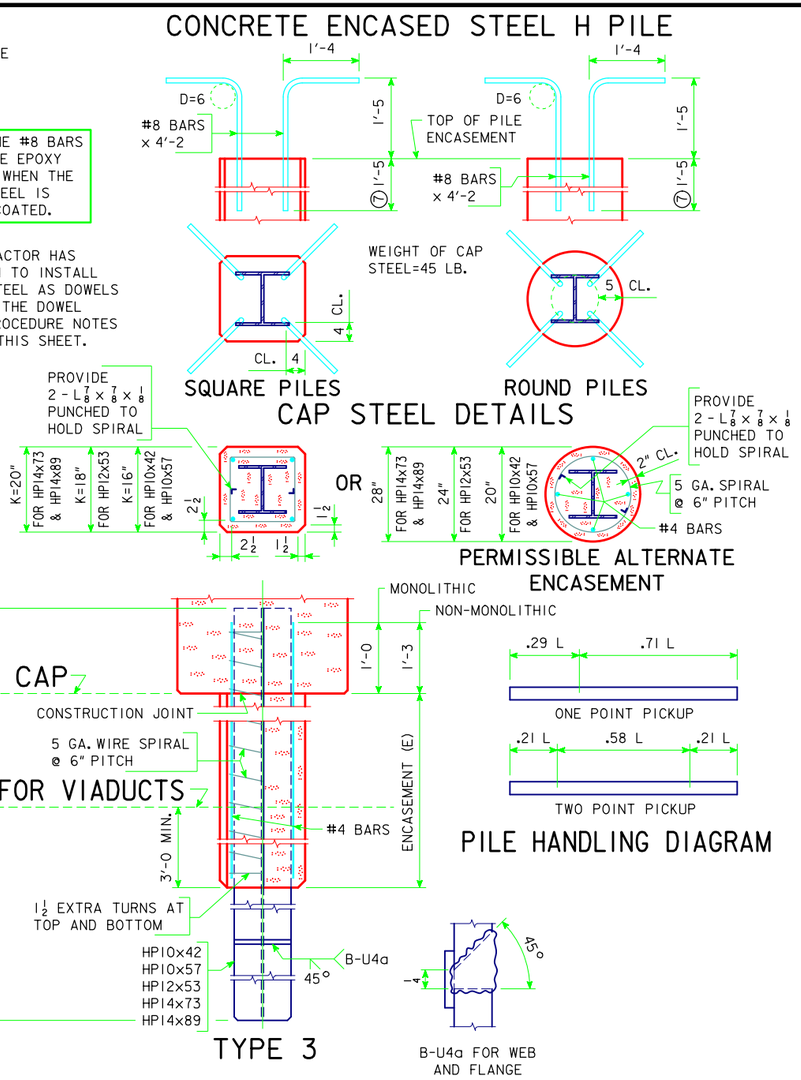

⑥ THE MAXIMUM H MAY BE MEASURED TO THE STREAMBED ELEVATION. HOWEVER, H SHALL BE MEASURED TO THE SCOUR ELEVATION WHEN THIS ELEVATION IS DEEPER THAN THE STREAMBED ELEVATION.

GENERAL NOTES:

EXCEPT AS NOTED ELSEWHERE, MATERIAL, CONSTRUCTION, DRIVING AND EXTENSIONS OR BUILD UPS WHEN NECESSARY SHALL BE IN ACCORDANCE WITH STANDARD SPECIFICATIONS OF THE IOWA D.O.T. AND CURRENT SUPPLEMENTAL SPECIFICATIONS AND SPECIAL PROVISIONS APPLICABLE.

CAP STEEL SHALL BE AS DETAILED ON THIS SHEET (D=PIN DIAMETER). IT SHOULD BE USED IF PILE EMBEDMENT IS LESS THAN 1'-6.

"NOMINAL RESISTANCE Pn", "G", AND "H" AS GIVEN IN TABLES ARE RECOMMENDED DESIGN VALUES FOR ORDINARY CONDITIONS, BUT MAY BE MODIFIED FOR SPECIAL CONDITIONS ON ANY GIVEN JOB.

NOMINAL RESISTANCE Pn AND PILE SIZE REQUIRED SHALL IN ALL CASES BE AS SPECIFIED ON THE PLANS.

NOMINAL RESISTANCE Pn SHOWN ARE FOR FRICTION RESISTANCE EXCEPT FOR TYPE 3 PILING WHERE THE RESISTANCE VALUES SHOWN COULD BE EITHER FRICTION OR POINT RESISTANCE.

COST OF ALL DRIVING POINTS AND CAP STEEL IS TO BE INCLUDED IN THE PRICE BID PER LINEAL FOOT FOR PILING.

WIRE SPIRAL SHALL CONFORM TO ASTM A82.

CAST IN PLACE PILE NOTES:

SHELL THICKNESSES SHOWN ARE MINIMUM REQUIREMENTS. THE METHOD OF DRIVING STEEL SHELL PILES SHALL BE ADAPTED TO THE TYPE AND THICKNESS OF SHELL SPECIFIED. ANY SHELLS WHICH HAVE BEEN IMPROPERLY DRIVEN, BROKEN OR ARE OTHERWISE DEFECTIVE SHALL BE REMOVED AND REPLACED BY THE BRIDGE CONTRACTOR.

ALL CAST IN PLACE PILES SHALL HAVE A CLOSURE PLATE. DRIVING POINTS SHALL BE USED IF SPECIFIED ON THE PLANS.

PRESTRESSED PILE NOTES:

EXCEPT AS OTHERWISE NOTED ALL EXPOSED CORNERS 90° OR SHARPER SHALL BE FILLETED 3/4".

DRIVING POINTS FOR PRESTRESSED PILES, IF CALLED FOR ON THE PLANS, SHALL BE AS DETAILED.

HEADS OF PRESTRESSED PILES TO BE FINISHED SMOOTH AND NORMAL TO AXIS OF PILE.

BIDDING NOTES:

THE PLANS SHALL DESIGNATE THE SIZE OF PILE TO BE USED. THEY SHALL ALSO SPECIFY THE TYPE, EITHER TYPE 1, TYPE 2, OR TYPE 3. IF THE OPTION OF TYPE 1 OR 2 IS GIVEN ON THE PLANS, THE CONTRACTOR SHALL CHOOSE THE TYPE TO BE USED. IF TYPE 3 IS SPECIFIED, TYPE 3 SHALL BE USED, BUT THE CONTRACTOR MAY CHOOSE THE SHAPE OF THE ENCASEMENT. IT SHOULD BE KEPT IN MIND THAT FOR A GIVEN SIZE AND RESISTANCE VALUE, LENGTH MAY VARY WITH THE SHAPE (SQUARE OR ROUND).

PILES SHALL BE BID DESIGNATING THE SIZE, TYPE AND LENGTH.

TYPE 1 PILING WILL BE BID PER LINEAL FOOT OF PILE.

TYPE 2 PILING WILL BE BID PER LINEAL FOOT OF PILE.

TYPE 3 PILING WILL BE BID PER LINEAL FOOT OF PILE AND LINEAL FOOT OF ENCASEMENT. PRICE BID FOR ENCASEMENT SHALL BE FULL PAYMENT FOR NECESSARY EXCAVATION AND FOR FURNISHING AND PLACING ALL MATERIAL.

DOWEL SETTING PROCEDURE:

IF CAP STEEL IS REQUIRED FOR THE PRESTRESSED PILES THE #8 DEFORMED BARS ARE TO BE SET AS DOWELS INTO THE PILES WITH POLYMER GROUT IN ACCORDANCE WITH ARTICLE 2301.03, E, OF THE STANDARD SPECIFICATIONS OR BY THE FOLLOWING PROCEDURE.

A. DRILL HOLE APPROXIMATELY TWICE THE DIAMETER OF THE DOWEL BAR AND TO THE DEPTH INDICATED.
B. FILL HOLE WITH WATER AND ALLOW TO STAND LONG ENOUGH TO THOROUGHLY SATURATE THE SURROUNDING CONCRETE (ABOUT FOUR HOURS).
C. BLOW OUT ALL FREE WATER AND FILL HOLE 2/3 FULL OF MORTAR.
D. INSERT DOWEL BY DRIVING, IF NECESSARY, AND MANIPULATE OR TAP WITH A HAMMER TO CONSOLIDATE MORTAR AND SECURE COMPLETE EMBEDMENT.
E. ADD MORE MORTAR, IF NECESSARY, TO FILL HOLE.
F. MORTAR SHALL CONSIST OF EQUAL PARTS PORTLAND CEMENT AND SAND WITH JUST ENOUGH WATER TO MAKE A WORKABLE MIX.

K DIMENSION	IN.	14Φ		16Φ	
G MIN. BELOW GROUND	FT.	24		27	
⑥ H MAX. ABOVE GROUND	FT.	18		22	
SHELL ASTM A-252		GR. 2	GR. 3	GR. 2	GR. 3
CONCRETE (L=40')	C.Y.	1.49	1.49	1.95	1.95
CONCRETE 1' CHANGE	C.Y.	0.0372	0.0373	0.0488	0.0488
① WT. OF SHELL (L=40')	LB.	1325	1231	1600	1600
WT. OF SHELL 1' CHANGE	LB.	32.26	29.94	38.77	38.77
f'c	KSI	4.0	4.0	4.0	4.0
⑤ NOMINAL RESISTANCE Pn	KIPS	119	119	137	137

① INCLUDES WEIGHT OF CLOSURE PLATE.

STRAND STRENGTH		270K	
K DIMENSION	IN.	14Φ	16Φ
G MIN. BELOW GROUND	FT.	24	27
⑥ H MAX. ABOVE GROUND	FT.	18	22
CONCRETE (L=40')	C.Y.	2.01	2.62
CONCRETE 1' CHANGE	C.Y.	0.050	0.066
② REINFORCING (L=40')	LB.	232	280
REINFORCING 1' CHANGE	LB.	3.93	5.10
MAX. L 1 PT. PICK-UP	FT.	57	60
MAX. L 2 PT. PICK-UP	FT.	82	86
f'c	KSI	5.0	5.0
⑤ NOMINAL RESISTANCE Pn	KIPS	127	146
③ INITIAL PRESTRESS	KIPS	174	231

② INCLUDES PRESTRESSING STRANDS.
③ INCREASE 5% FOR ARTIFICIAL CURING.

	STEEL H PILE		HP10x42	HP10x57	HP12x53	HP14x73	HP14x89
	G MINIMUM BELOW GROUND	FT.	18	18	21	24	24
	⑥ H MAX. ABOVE GROUND W/MONOLITHIC	FT.	19	19	23	28	29
	⑥ H MAX. ABOVE GROUND W/NON-MONOLITHIC	FT.	15	16	20	25	26
SQUARE	CONCRETE (E=18')	C.Y.	1.12	1.10	1.41	1.74	1.72
SQUARE	CONCRETE 1' CHANGE	C.Y.	0.062	0.061	0.078	0.097	0.096
SQUARE	④ REINFORCING (E=18')	LB.	96	96	99	103	103
SQUARE	④ REINFORCING 1' CHANGE	LB.	4.98	4.98	5.13	5.28	5.28
ROUND	CONCRETE (E=18')	C.Y.	1.40	1.38	2.02	2.75	2.73
ROUND	CONCRETE 1' CHANGE	C.Y.	0.078	0.076	0.112	0.153	0.152
ROUND	④ REINFORCING (E=18')	LB.	97	97	102	107	107
ROUND	④ REINFORCING 1' CHANGE	LB.	5.02	5.02	5.26	5.50	5.50
	⑤ NOMINAL RESISTANCE Pn	KIPS	154	208	192	265	324
	f'c = 4.0 KSI						

④ INCLUDES WEIGHT OF PUNCHED L 7/8 x 7/8 x 1/8
⑤ SEE BRIDGE DESIGN MANUAL 6.6.4.2 FOR ADDITIONAL INFORMATION

DESIGN FOR 0° SKEW

70'-0 X 30'-0 CONTINUOUS CONCRETE SLAB BRIDGE

21'-0 END SPANS — 28'-0 INTERIOR SPAN

LRFD TRESTLE PILE BENTS - PIOL

STA. 113+27.00 — MAY, 2015

GUTHRIE COUNTY

IOWA DEPARTMENT OF TRANSPORTATION - HIGHWAY DIVISION

DESIGN SHEET NO. 10 OF 10 — FILE NO. 31222 — DESIGN NO. 215

REVISION 04-13 - CHANGED BEARING VALUE TO NOMINAL RESISTANCE Pn IN NOTES. CHANGED f'c TO 4.0 KSI. DELETED BEARING VALUES IN THE PILE INFORMATION TABLES.
ENGLISHMISCELLANEOUSBRIDGES.DGN - PIOL - THIS SHEET ISSUED 01-09.

WATER	SOILS BOOK NO.		
SAMPLE	SHELBY	DENS. CORE	
PLUGGED	BLOW*	SELECT SAND	
MOISTURE	UNSUITABLE	SANDY SOIL	
SHALE	ROCK	SELECT SOIL	

*140-lb CME Automatic SPT Hammer

0 FEET 20

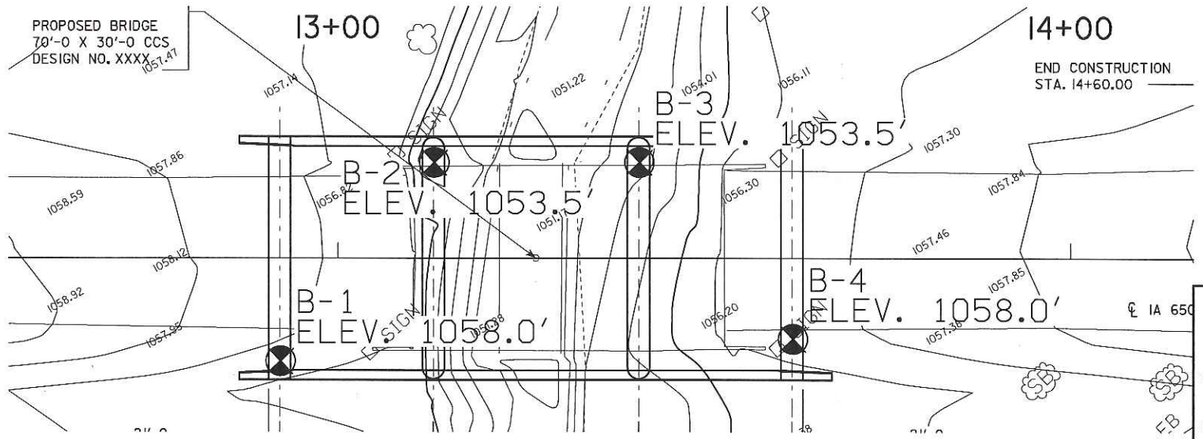

THIS SHEET IS INCLUDED TO SHOW SOIL INFORMATION. DETAILS AND NOTES SHOWN ELSEWHERE IN THESE PLANS SHALL BE USED FOR STRUCTURE CONSTRUCTION.

NOTE: SOILS MAY VARY BETWEEN BORINGS. SEE STANDARD SPECIFICATION 1104.01

-INDICATES LAYER THICKNESS (ft.)

BLOW COUNT
LAYER - N=BLOWS

A1 N=5

I hereby certify that this engineering document was prepared by me or under my direct personal supervision and that I am a duly licensed Professional Engineer under the laws of the State of Iowa.

Signature: Theresa Stromberg-Murphy Date: 5/6/15

THERESA STROMBERG-MURPHY
Printed or Typed Name

My license renewal date is December 31, 2015

Pages or sheets covered by this seal: SPS.1

DESIGN FOR 0°

70'-0 X 30'-0 CONTINUOUS CONCRETE SLAB BRIDGE

21'-0 END SPANS 28'-0 INTERIOR SPAN

SOILS PROFILE SHEET

STA. 13+27.00 MAY, 2015

GUTHRIE COUNTY

IOWA DEPARTMENT OF TRANSPORTATION - HIGHWAY DIVISION

DESIGN SHEET NO. 1 OF 1 FILE NO. 31222 DESIGN NO. 215

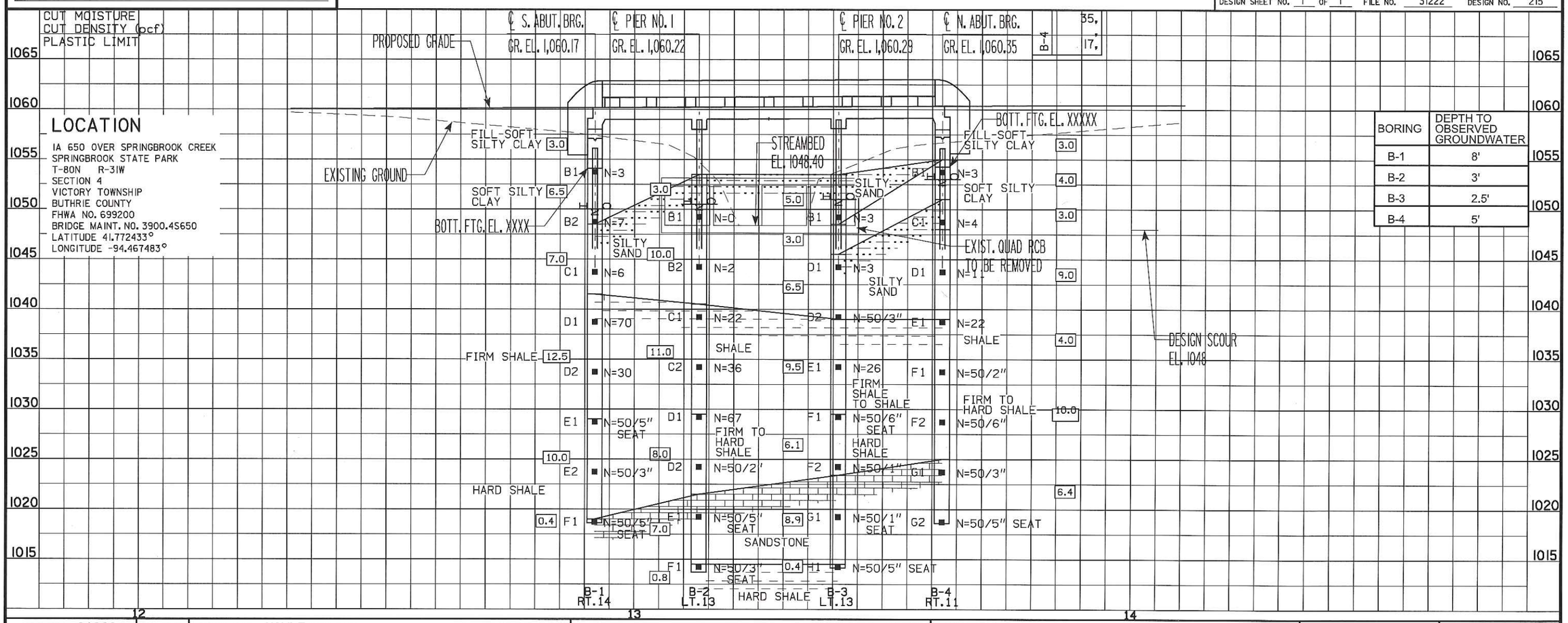

LOCATION

IA 650 OVER SPRINGBROOK CREEK
SPRINGBROOK STATE PARK
T-80N R-31W
SECTION 4
VICTORY TOWNSHIP
BUTHRIE COUNTY
FHWA NO. 699200
BRIDGE MAINT. NO. 3900.4S650
LATITUDE 41.772433°
LONGITUDE -94.467483°

BORING	DEPTH TO OBSERVED GROUNDWATER
B-1	8'
B-2	3'
B-3	2.5'
B-4	5'

FILE NO.	31222	ENGLISH	DESIGN TEAM HGM\Terracon	GUTHIRE COUNTY	PROJECT NUMBER SP-650-0(9)--7C-39	SHEET NUMBER SPS.1

2:49:14 PM 5/6/2015 kekausali\kN:\Projects\2015\08155012\CAD\SPS\39650008-1.SPS

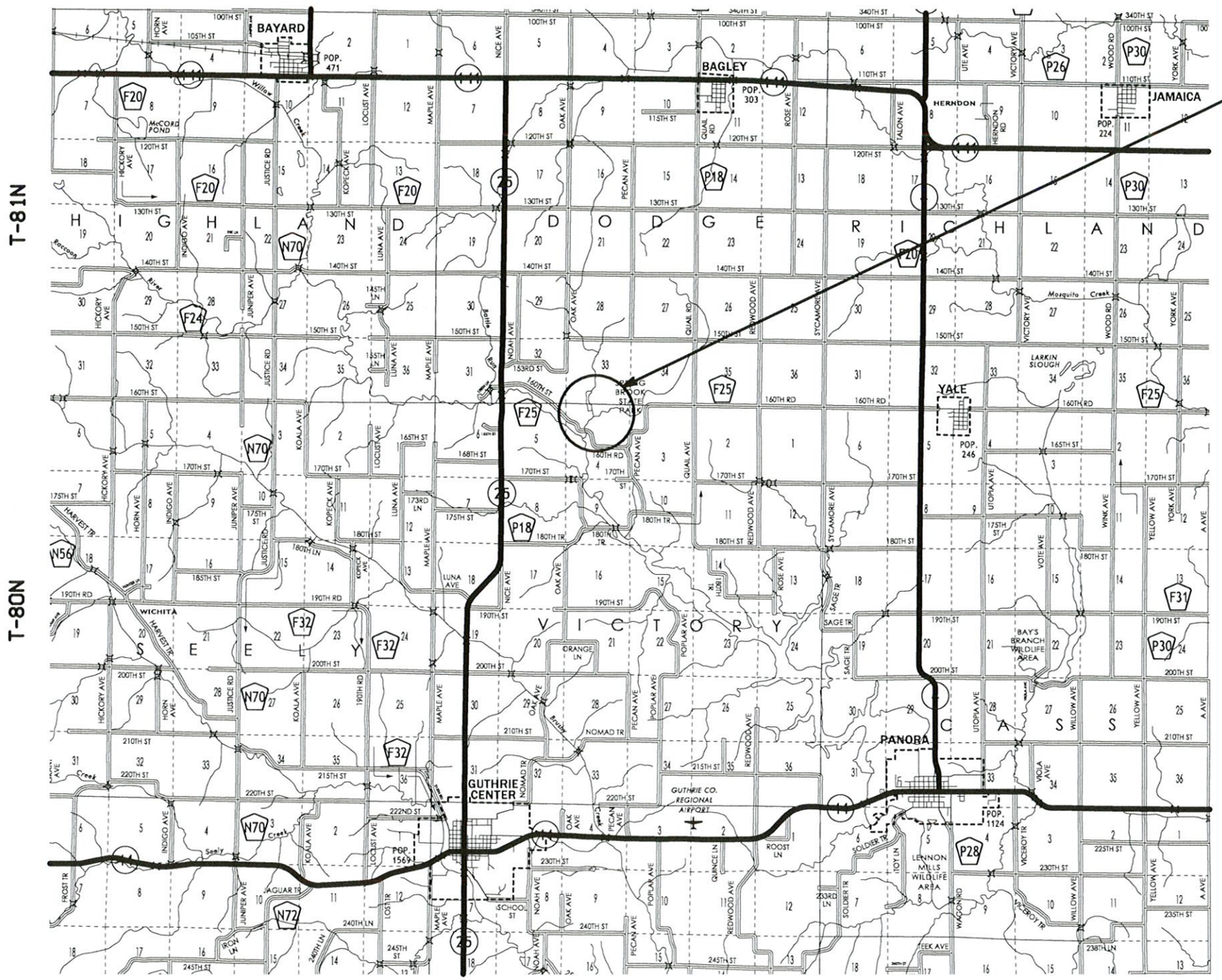

MILEAGE SUMMARY			105-1 09-27-94
Div.	Location	Lin. Ft.	Miles
1	Site 1 - IA 650 Over Springbrook Cr.		
	Sta. 112+00 to Sta. 114+80	280	
	Deduct Bridge at Sta. 113+27	70	
	Total Length of Roadway	210	0.04
	Total Length of Bridge	70	0.013
	Total Length of Project	280	0.053

LOCATION MAP SCALE
0 1 2 3
Miles

LICENSED PROFESSIONAL ENGINEER
BRIAN T. HIGGINBOTHAM
14503
IOWA

I hereby certify that this engineering document was prepared by me or under my direct personal supervision and that I am a duly licensed Professional Engineer under the laws of the

Signature 4/28/15 Date
Brian T. Higginbotham, P.E.
Printed or Typed Name

My license renewal date is December 31, 2015

Pages or sheets covered by this seal: A.1, B.1-B.2, C.1-C.7, D.1-D.2, G.1-G.2, J.1, L.1-L.2, T.1 and W.1-W.6

FILE NO. 31222	ENGLISH	DESIGN TEAM hgm	GUTHRIE COUNTY	PROJECT NUMBER SP-650-0(9)--7C-39	SHEET NUMBER A.1

1:58:33 PM 4/2/2015 BTH W:\Projects\3965001012\Design\3965009a01.sht

G_2_Grade
MODIFIED

LOCATION			DIMENSIONS			
ROAD IDENTIFICATION	STATION TO STATION		(L) Feet	(R) Feet	(X) Inches	FS
IA 650 - SITE 1	112+00	112+21.3	18.27	18.27	13	3
IA 650 - SITE 1	112+21.3	112+71.3	18.27	18.3	BR103	3
IA 650 - SITE 1	112+71.3	112+91.3	21.2	21.2	BR103	3
IA 650 - SITE 1	BRIDGE					
IA 650 - SITE 1	113+62.5	113+82.5	21.2	21.2	BR103	3
IA 650 - SITE 1	113+82.5	114+10	18.3	18.3	BR103	3
IA 650 - SITE 1	114+10		18.3	18.3		3/3
IA 650 - SITE 1		114+48	22	18.3	13	6/3
IA 650 - SITE 1	114+48	114+80	---	18.3	13	---/3

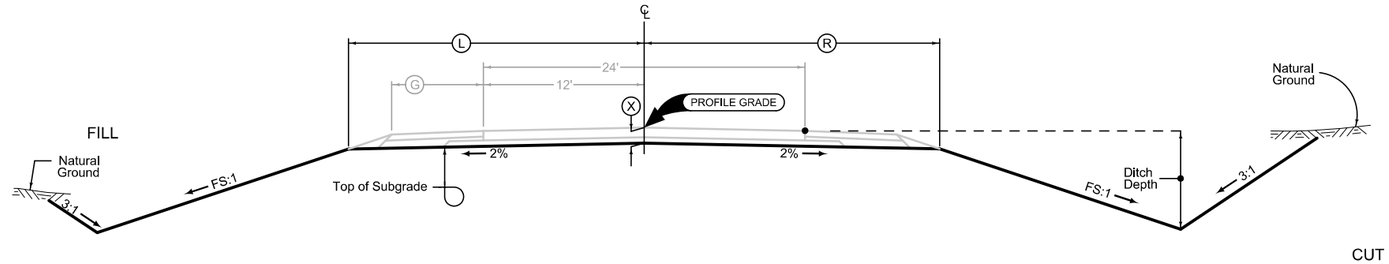

Normal section shown may be modified appropriately in areas of superelevated curves or other locations specifically designated by the Engineer.

See plan & profile sheets and cross sections for additional details of ditches and backslopes.

2 LANE GRADING

Granular Shoulder

2_G_ 10-21-14		
STATION TO STATION		(G) Feet
SITE 1		
112+00	112+71.3	3
113+82.5	114+48.5	3

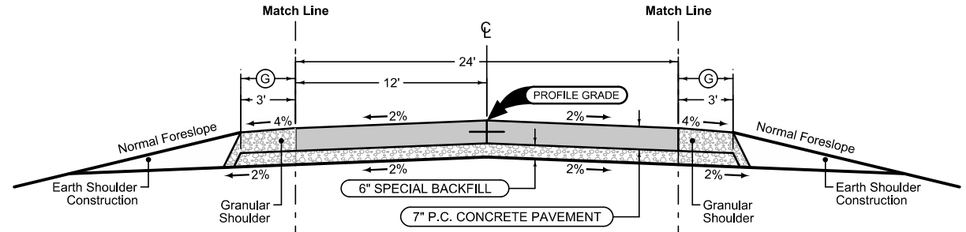

Granular Shoulder

2_G_ 10-21-14		
STATION TO STATION		(G) Feet
SITE 1		
112+00	112+71.3	3
113+82.5	114+80	3

Mainline Jointing:
Transverse joints: CD at 20' spacing
Longitudinal joint: L-2

2P_ 10-19-10		
STATION TO STATION		
IA 650 - SITE 1		
112+00	112+21.3	
112+21.3	112+91.3	BR-103
		BRIDGE
113+62.5	112+32.5	BR-103
112+32.5	114+80	SEE L SHTS

See Tab 100-24 or 100-25 for pavement quantities.

See Tab 112-9 for shoulder quantities.

IA 650 - SITE 1

100-0A
10-28-97

ESTIMATED ROADWAY QUANTITIES
(1 DIVISION PROJECT)

Item No.	Item Code	Item	Unit	Total	As Built Qty.
1	2101-0850002	CLEARING AND GRUBBING	UNIT	3.3	
2	2102-0425070	SPECIAL BACKFILL	TON	94	
3	2102-2625000	EMBANKMENT-IN-PLACE	CY	62	
4	2102-2710070	EXCAVATION, CLASS 10, ROADWAY AND BORROW	CY	107	
5	2102-2712015	CLASS 12, BOULDERS OR ROCK FRAGMENTS	CY	10	
6	2105-8425015	TOPSOIL, STRIP, SALVAGE AND SPREAD	CY	173	
7	2121-7425010	GRANULAR SHOULDERS, TYPE A	TON	63.4	
8	2123-7450000	SHOULDER CONSTRUCTION, EARTH	STA	3.7	
9	2301-0690210	BRIDGE APPROACH, TWO LANE	SY	267	
10	2301-1032070	STANDARD OR SLIP FORM PORTLAND CEMENT CONCRETE PAVEMENT, CLASS C,	SY	249.5	
		CLASS 2, DURABILITY, 7 IN.			
11	2510-6745850	REMOVAL OF PAVEMENT	SY	620	
12	2518-6910000	SAFETY CLOSURE	EACH	3	
13	2520-3350010	FIELD LABORATORY	EACH	1	
14	2524-6765010	REMOVE AND REINSTALL SIGN, AS PER PLAN	EACH	4	
15	2626-8285000	CONSTRUCTION SURVEY	LS	1	
16	2528-8445110	TRAFFIC CONTROL	LS	1	
17	2602-0000020	SILT FENCE	LF	290	
18	2602-0000030	SILT FENCE FOR DITCH CHECK	LF	120	
19	2602-0000071	REMOVAL OF SILT FENCE OR SILT FENCE FOR DITCH CHECKS	LF	410	
20	2602-0000101	MAINTENANCE OF SILT FENCE OR SILT FENCE FOR DITCH CHECKS	LF	40	
21	2602-0000212	FLOATING SILT CURTAIN (HANGING)	LF	200	
22	2602-0000240	MAINTENANCE OF FLOATING SILT CURTAIN	LF	100	
23	2602-0000312	PERIMETER AND SLOPE SEDIMENT CONTROL DEVICE, 12 IN. DIA.	LF	200	
24	2602-0000320	PERIMETER AND SLOPE SEDIMENT CONTROL DEVICE, 20 IN. DIA.	LF	200	
25	2602-0000350	REMOVAL OF PERIMETER AND SLOPE SEDIMENT CONTROL DEVICE	LF	400	
26	2602-0010010	MOBILIZATIONS, EROSION CONTROL	EACH	1	
27	2602-0010020	MOBILIZATIONS, EMERGENCY EROSION CONTROL	EACH	1	

100-1D
10-18-05

PROJECT DESCRIPTION

This project involves the removal of a four cell 9'X5' RCB and replacement with a 70' X 30' Continuous Concrete Slab Bridge. A profile correction will be made, and associated bridge approach sections will be installed. In order to accommodate the new profile, new portland cement concrete pavement sections will be included at each end of the bridge approach sections.

This project (Site 1) will be tied to two separate projects within Springbrook Park. The work is to be started after Labor Day and completed prior to Memorial Day.

Work at Site 1 should be completed prior starting work on Sites 2 and 3, in order to accommodate construction traffic loads.

100-4A
10-29-02

ESTIMATE REFERENCE INFORMATION

Item No.	Item Code	Description
1	2101-0850002	**CLEARING AND GRUBBING**
		REFER TO TAB 110-17 ON SHEET C.5 FOR LOCATIONS.
		REFER TO GENERAL NOTES 232-10 AND 232-6 ON SHEET C.3 FOR ADDITIONAL INFORMATION.
2	2102-0425070	**SPECIAL BACKFILL**
		REFER TO TAB 100-24 ON SHEET C.6.
		DESIGN RATE: 140 PCF
3	2102-2625000	**EMBANKMENT-IN-PLACE**
4	2102-2710070	**EXCAVATION, CLASS 10, ROADWAY AND BORROW**
		REFER TO SHEET T.1 AND CROSS-SECTIONS ON SHEETS W.1 - W.6 FOR LOCATIONS.
		REFER TO TAB. 103-7 ON SHEET C.5
		REFER TO TYPICAL G_2_GRADE MODIFIED ON SHEET B.1 FOR DETAILS OF CONSTRUCTION.
		THERE IS AN ESTIMATED 107 CY OF CLASS 10 CUT FOR ROADWAY GRADING.
		THERE IS AN ESTIMATED 169 CY OF ADJUSTED FILL MATERIAL REQUIRED FOR ROADWAY GRADING
		THE CONTRACTOR WILL BE REQUIRED TO PROVIDE AN ESTIMATED 62 CY OF EMBANKMENT-IN-PLACE.
5	2102-2712015	**CLASS 12, BOULDERS OR ROCK FRAGMENTS**
		REFER TO TAB 103-7 ON SHEET C.5
		QUANTITY IS ESTIMATED FOR REMOVAL OF LARGE ROCK BELOW SURFACE, IN CREEK AND ON BANKS.
		CONTRACTOR SHALL FORM STOCKPILE OF ALL ROCK AND BOULDERS PRIOR TO REMOVAL FROM SITE FOR MEASUREMENT
		BY THE ENGINEER.
6	2105-8425015	**TOPSOIL, STRIP, SALVAGE AND SPREAD**
		REFER TO TAB 103-4 AND 103-7 ON SHEET C.5 FOR LOCATIONS AND DETAILS.
		CONTRACTOR SHALL STRIP 9-INCHES OF TOPSOIL WITHIN CONSTRUCTION LIMITS. STRIPPED TOPSOIL SHALL BE REPLACED
		AT APPROXIMATE 6-INCH DEPTH, ALLOWING FOR SHRINKAGE.
7	2121-7425010	**GRANULAR SHOULDERS, TYPE A**
8	2123-7450000	**SHOULDER CONSTRUCTION, EARTH**
		REFER TO TAB 112-9 ON SHEET C.7 FOR LOCATIONS.
		REFER TO TYPICAL 2_G ON SHEET B.2 FOR ADDITONAL INFORMATION.
9	2301-0690210	**BRIDGE APPROACH, TWO LANE**
		REFER TO TAB 112-6 ON SHEET C.6 FOR LOCATIONS.
		REFER TO STANDARD ROAD PLANS BR-101, BR-103 AND DR-304 FOR DETAILS OF CONSTRUCTION.
		REFER TO PV-101 AND PV-102 FOR ADDITONAL DETAILS.
		CONTRACTOR SHALL PROVIDE 82 LF OF SUBDRAIN, 2 DR-304 SUBDRAIN OUTLETS, 6 CY OF POROUS BACKFILL, 3 CY OF
		CLASS A CRUSHED STONE, 426 TONS OF MODIFIED SUBBASE AND 466 SY OF POLYMER GRID, INCIDENTAL TO THE ITEM OF
		BRIDGE APPROACH, TWO LANE.
10	2301-1032070	**STANDARD OR SLIP FORM PORTLAND CEMENT CONCRETE PAVEMENT, CLASS C,**
		CLASS 2, DURABILITY, 7 IN.
		REFER TO TAB 100-24 ON SHEET C.6.
		REFER TO TYPICAL 2_P ON SHEET B.2 FOR DETAILS OF CONSTRUCTION.
		REFER TO STANDARD ROAD PLAN PV-101 FOR ADDITIONAL DETAILS.
		REFER TO GENERAL NOTE 290-2 ON SHEET C.3.
		REFER TO TAB 100-27 ON SHEET C.7; SMOOTHNESS IS WAIVED.
		CARE SHALL BE TAKEN TO PROTECT EXISTING PAVEMENT EDGES AT SAWCUTS TO PROVIDE CLEAN EDGES AT TIE-INS.
		PCC PAVEMENT THICKNESS WILL NOT BE EVALUATED.
11	2510-6745850	**REMOVAL OF PAVEMENT**
		REFER TO TAB 110-1 ON SHEET C.5.
		INCLUDES 85 LF OF SAWCUT INCIDENTAL TO THE ITEM OF REMOVAL OF PAVEMENT.
		CARE SHALL BE TAKEN TO PROTECT EXISTING PAVEMENT EDGES AT SAWCUTS TO PROVIDE CLEAN EDGES AT TIE-INS.
12	2518-6910000	**SAFETY CLOSURE**
		REFER TO TAB 108-13A ON SHEET C.5.
		ONE SAFETY CLOSURE ASSOCIATED WITH STANDARD ROAD PLAN TC-252.
		TWO SAFETY CLOSURES TO BE PLACED AS HAZARD CLOSURES TO PROTECT WORK ZONE.
13	2520-3350010	**FIELD LABORATORY**
14	2524-6765010	**REMOVE AND REINSTALL SIGN, AS PER PLAN**
		OBJECT MARKERS AND POSTS AT THE FOUR CORNERS OF THE EXISTING STRUCTURE SHALL BE REMOVED PRIOR TO CONSTRUCTION
		AND STORED IN A SAFE LOCATION. THE SIGNS SHALL BE REINSTALLED AT THE FOUR CORNERS OF THE NEW BRIDGE AT THE
		COMPLETION OF CONSTRUCTION.
		REFER TO STANDARD ROAD PLAN SI-173 FOR PROPER PLACEMENT.
		MEASUREMENT FOR REMOVAL AND REINSTALLATION OF SIGNS WILL BE FOR EACH SIGN SATISFACTORILY REMOVED AND
		REINSTALLED. BASIS OF PAYMENT FOR REMOVAL AND REINSTALLATION OF EACH SIGN, INCLUDING REMOVAL, STORAGE, AND
		REINSTALLATION, INCLUDING LABOR, TOOLS, EQUIPMENT AND ANY HARDWARE. IF SIGNS OR POSTS ARE DAMAGED OR BROKEN
		DURING REMOVAL, STORAGE OR REINSTALLATION, THEY SHALL BE REPLACED WITH EQUIVALENT MATERIALS AT NO
		ADDITIONAL COST TO THE OWNER.
15	2626-8285000	**CONSTRUCTION SURVEY**
16	2528-8445110	**TRAFFIC CONTROL**
17	2602-0000020	**SILT FENCE**
		REFER TO TAB 100-17 ON SHEET C.5. THE TABULATION INCLUDES ESTIMATED LOCATIONS FOR PLACEMTNE OF SILT FENCE
		TO ADDRESS POSSIBLE EROSION DURING CONSTRUCTION. VERIFY THE SPECIFIC LOCATIONS WITH THE ENGINEER PRIOR TO
		BEGINNING PLACEMENT. BID ITEM INCLUDES 25% ADDITIONAL QUANTITY FOR FIELD ADJUSTMENTS AND REPLACEMENTS.

ESTIMATE REFERENCE INFORMATION

Item No.	Item Code	Description
18	2602-0000030	**SILT FENCE FOR DITCH CHECK**
		REFER TO TAB 100-18 ON SHEET C.5. THE TABULATION INCLUDES ESTIMATED LOCATIONS FOR PLACEMENT OF SILT FENCE
		FOR DITCH CHECKS TO ADDRESS POSSIBLE EROSION DURING CONSTRUCTION. VERIFY THE SPECIFIC LOCATIONS WITH THE
		ENGINEER PRIOR TO BEGINNING PLACEMENT. BID ITEM INCLUDES 50% ADDITIONAL QUANTITY FOR FIELD ADJUSTMENTS
		AND REPLACEMENTS.
19	2602-0000071	**REMOVAL OF SILT FENCE OR SILT FENCE FOR DITCH CHECKS**
		THIS ITEM IS INCLUDED FOR SILT FENCE AND SILT FENCE FOR DITCH CHECK REMOVAL REQUIRED FOR STAGING REASONS,
		REMOVAL TO ALLOW FOR REPLACEMENT (REPLACEMENT TO BE PAID SEPARATELY), OR FOR AREAS THAT HAVE ACHIEVED
		70% PERMANENT GROWTH.
20	2602-0000101	**MAINTENANCE OF SILT FENCE OR SILT FENCE FOR DITCH CHECKS**
		THIS ITEM INCLUDED FOR CLEAN-OUT AND REPAIR OF THE SILT FENCE AND SILT FENCE FOR DITCH CHECKS DURING THE
		GRADING PROJECT.
21	2602-0000212	**FLOATING SILT CURTAIN (HANGING)**
22	2602-0000240	**MAINTENANCE OF FLOATING SILT CURTAIN**
		REFER TO STANDARD ROAD PLAN EC-202 FOR DETAILS OF CONSTRUCTION.
		REFER TO TAB 100-10 ON SHEET C.5 FOR LOCATIONS.
23	2602-0000312	**PERIMETER AND SLOPE SEDIMENT CONTROL DEVICE, 12 IN. DIA.**
24	2602-0000320	**PERIMETER AND SLOPE SEDIMENT CONTROL DEVICE, 20 IN. DIA.**
25	2602-0000350	**REMOVAL OF PERIMETER AND SLOPE SEDIMENT CONTROL DEVICE**
		REFER TO TAB 100-19 ON SHEET C.5 FOR LOCATIONS.
		REFER TO STANDARD ROAD PLAN EC-204 FOR DETAILS OF CONSTRUCTION.
		VERIFY THE SPECIFIC LOCATIONS WITH THE ENGINEER PRIOR TO BEGINNING PLACEMENT.
26	2602-0010010	**MOBILIZATIONS, EROSION CONTROL**
27	2602-0010020	**MOBILIZATIONS, EMERGENCY EROSION CONTROL**

STANDARD ROAD PLANS

The following Standard Road Plans apply to construction work on this project.

Number	Date	Title
BR-101	04-21-15	Bridge Approach Section (General Details)
BR-103	04-21-15	Bridge Approach Section (Two-Lane for Bridge Reconstruction, PCC Pavement)
DR-304	04-21-15	Outlets for Longitudinal, Transverse and Backslope Subdrains
EC-201	04-21-15	Silt Fence
EC-202	10-21-14	Floating Silt Curtain
EC-204	04-21-15	Perimeter and Slope Sediment Control Devices
EW-202	10-21-14	Bridge Berm Grading without Recoverable Slope (Non-Barnroof Section)
PV-101	04-21-15	Joints
PV-102	04-15-14	PCC Curb Details
SI-173	04-20-10	Object Markers
TC-1	04-16-13	Work Not Affecting Traffic (Two-Lane or Multi-Lane)
TC-202	04-21-15	Work Within 15 ft of Traveled Way
TC-252	04-21-15	Routes Closed to Traffic

232-3B
Modified

EROSION CONTROL (URBAN SEEDING)

Following the completion of work in a disturbed area, place seed, fertilizer, and mulch on the disturbed area as follows:

Use seed mix and fertilizer meeting the requirements of Article 2601.03,C,4 and Section 4169 of the Standard Specifications.

Use mulch meeting the requirements of Articles 2601.03,E,2,a and 4169.07,A of the Standard Specifications.

Preparing the seedbed and furnishing and applying seed, fertilizer, and mulch is incidental to mobilization and will not be paid for separately.

232-10
10-21-14

EMERALD ASH BORER

Dispose of all wood material generated as a result of clearing and/or grubbing according to the Iowa Department of Agriculture and Land Stewardship's Emerald Ash Borer (EAB) Quarantine Order. For more information refer to http://www.iowatreepests.com/eab_regulations.html.

232-11
Modified

EROSION CONTROL (STABILIZING CROP SEEDING)

Following the completion of work in a disturbed area, place stabilizing crop, fertilizer, and mulch on the disturbed area as follows:

Use seed mix and fertilizer meeting the requirements of Article 2601.03,C,1 and Section 4169 of the Standard Specifications.

Use mulch meeting the requirements of Articles 2601.03,E,2,a and 4169.07,A of the Standard Specifications.

Preparing the seedbed and furnishing and applying seed, fertilizer, and mulch is incidental to mobilization and will not be paid for separately.

232-6
10-18-11

EROSION CONTROL (SELECTIVE CLEARING)

Selective clearing will be required on this project. Do not remove any trees outside of the construction limits without the Engineer’s approval.

111-25
10-18-11

INDEX OF TABULATIONS

Tabulation	Tabulation Title	Sheet No.
C Sheets		
100-0A	ESTIMATED ROADWAY QUANTITIES (1 DIVISION PROJECT)	No Sheet No.
100-1D	PROJECT DESCRIPTION	No Sheet No.
100-4A	ESTIMATE REFERENCE INFORMATION	C.1 - C.2
100-10	FLOATING SILT CURTAINS	C.5
100-17	TABULATION OF SILT FENCES	C.5
100-18	TABULATION OF SILT FENCES FOR DITCH CHECKS	C.5
100-19	PERIMETER AND SLOPE SEDIMENT CONTROL DEVICE	C.5
100-24	PCC PAVEMENT	C.6
100-27	PAVEMENT SMOOTHNESS + PCC TEXTURE	No Sheet No.
102-5	EXISTING PAVEMENT	C.6
103-4	TABULATION OF SPREADING TOPSOIL	C.5
103-7	SHRINKAGE DATA	C.5
105-4	STANDARD ROAD PLANS	C.2
108-13A	SAFETY CLOSURES	No Sheet No.
110-1	REMOVAL OF PAVEMENT	C.5
110-12A	POLLUTION PREVENTION PLAN	C.4 - C.4
110-17	CLEARING AND GRUBBING	C.5
111-25	INDEX OF TABULATIONS	C.3
112-6	BRIDGE APPROACH SECTION	C.6
112-9	SHOULDERS	C.7
232-3B	EROSION CONTROL (URBAN SEEDING)	C.3
232-6	EROSION CONTROL (SELECTIVE CLEARING)	C.3
232-10	EMERALD ASH BORER	C.3
232-11	EROSION CONTROL (STABILIZING CROP SEEDING)	C.3

POLLUTION PREVENTION PLAN

This Base Pollution Prevention Plan (PPP) includes information on Roles and Responsibilities, Project Site Description, Controls, Maintenance Procedures, Inspection Requirements, Non-Storm Water Controls, Potential Sources of Off Right-of-Way Pollution, and Definitions. This plan references other documents rather than repeating the information contained in the documents. A copy of this Base Pollution Prevention Plan, amended as needed per plan revisions or by contract modification, will be readily available for review.

All contractors shall conduct their operations in a manner that controls pollutants, minimizes erosion, and prevents sediments from entering waters of the state and leaving the highway right-of-way. The prime contractor shall be responsible for compliance and implementation of the PPP for their entire contract. This responsibility shall be further shared with subcontractors whose work is a source of potential pollution as defined in this PPP.

I. ROLES AND RESPONSIBILITES
- A. Designer:
  1. Prepares Base PPP included in the project plan.
  2. Prepares Notice of Intent (NOI) submitted to Iowa DNR.
  3. Signature authority on the Base PPP and NOI.
- B. Contractor/Subcontractor:
  1. Affected contractors/subcontractors are co-permittees with the IDOT and will sign a certification statement adhering to the requirements of the NPDES permit and this PPP plan. All co-permittees are legally required under the Clean Water Act and the Iowa Administrative Code to ensure compliance with the terms and conditions of this PPP.
  2. Submit a detailed schedule according to Article 2602 of the Specifications and any additional plan notes.
  3. Install and maintain appropriate controls.
  4. Supervise and implement good housekeeping practices.
  5. Conduct joint required inspections of the site with inspection staff.
  6. Signature authority on Co-Permittee Certification Statements and storm water inspection reports.
- C. RCE/Inspector:
  1. Update PPP whenever there is a change in design, construction, operation or maintenance, which has a significant effect on the discharge of pollutants from the project.
  2. Maintain an up-to-date list that identifies contractors and subcontractors as co-permittees.
  3. Make these plans available to the DNR upon their request.
  4. Conduct joint required inspections of the site with the contractor/subcontractor.
  5. Complete an inspection report after each inspection.
  6. Signature authority on storm water inspection reports and Notice of Discontinuation (NOD).

II. PROJECT SITE DESCRIPTION
- A. This Pollution Prevention Plan (PPP) is for the construction of a three roadway sites at Springbrook State Park, including 1 bridge and 1 RCB reconstruction.
- B. This PPP covers approximately 2.3 acres with an estimated 2.2 acres being disturbed. The portion of the PPP covered by this contract has 2.2 acres disturbed.
- C. The PPP is located in an area of one soil association Sharpsburg - Shelby - Adair. The estimated average SCS runoff curve number for this PPP after completion will be 87.
- D. Storm Water Site Map - Multiple sources of information comprise the base storm water site map including:
  1. Drainage patterns – Plan and Profile sheets and Situation plans.
  2. Proposed Slopes – Cross Sections.
  3. Areas of Soil Disturbance – construction limits shown on Plan and Profile sheets.
  4. Location of Structural Controls – Tabulations on C sheets.
  5. Locations of Non-structural Controls – Tabulations on C sheets.
  6. Locations of Stabilization Practices – generally within construction limits shown on Plan and Profile sheets.
  7. Surface Waters (including wetlands) – Plan and Profile sheets.
  8. Locations where storm water is discharged – Plan and Profile sheets.
- E. The base site map is amended by contract modifications and progress payments of completed erosion control work.
- F. Runoff from this work will flow into Springbrook Creek, Middle Racoon River and Lake Panorama.

III. CONTROLS
- A. The contractor's work plan and sequence of operations specified in Article 2602.03 for accomplishment of storm water controls should clearly describe the intended sequence of major activities and for each activity define the control measure and the timing during the construction process that the measure will be implemented.
- B. Preserve vegetation in areas not needed for construction.
- C. Section 2601 and 2602 of the Standard Specifications define requirements to implement erosion and sediment control measures. Actual quantities used may vary from the Base PPP and amendment of the plan will be documented via fieldbook entries or by contract modification. Additional erosion and sediment control items may be required as determined by the inspector and/or contractor during storm water monitoring inspections. If the work involved is not applicable to any contract items, the work will be paid for according to Article 1109.03 paragraph B.
  1. EROSION AND SEDIMENT CONTROLS
     - a. Stabilization Practices
       1) Site plans will ensure that existing vegetation is preserved where attainable and disturbed portions of the site will be stabilized.
       2) Stabilization measures shall be initiated as soon as practicable in portions of the site where construction activities have temporarily or permanently ceased.
       3) Temporary stabilizing seeding shall be completed as the disturbed areas are constructed. If construction activity is not planned to occur in a disturbed area for at least 21 days, the area shall be stabilized by temporary seeding or mulching within 14 days. Other stabilizing methods shall be used outside the seeding time period.
       4) Stabilization measures to be used for this project are located in the Estimated Project Quantities (100-1A) and Estimate Reference Information (100-4A) located on the C sheets of the plan. Additional items may be found in the Inspector's Daily Reports (IDR) or Contract Modifications.
     - b. Structural Practices
       1) Structural practices will be implemented to divert flows from exposed soils and detain or otherwise limit runoff and the discharge of pollutants from exposed areas of the site.
       2) Structural items to be used for this project are located in the Estimated Project Quantities (100-1A) and Estimate Reference Information (100-4A) located on the C sheets of the plan, as well as all other item specific Tabulations. Typical drawings detailing construction of the devices to be used on this project can be found on the B sheets of the plan or are referenced in the Standard Road Plans Tabulation.
     - c. Storm Water Management
       1) Measures shall be installed during the construction process to control pollutants in storm water discharges that will occur after construction operations have been completed. The installation of these devices may be subject to Section 404 of the Clean Water Act.
  2. OTHER CONTROLS
     - a. Contractor disposal of unused construction materials and construction material wastes shall comply with applicable state and local waste disposal, sanitary sewer, or septic system regulations. In the event of a conflict with other governmental laws, rules and regulations, the more restrictive laws, rules or regulations shall apply.
       1) Vehicle Entrances and Exits - Construct and maintain entrances and exits to prevent tracking of sediments onto roadways.
       2) Material Delivery, Storage and Use - Implement practices to prevent discharge of construction materials during delivery, storage, and use.
       3) Stockpile Management - Install controls to reduce or eliminate pollution of storm water from stockpiles of soil and paving.
       4) Waste Disposal - Do not discharge any materials, including building materials, into waters of the state, except as authorized by a Section 404 permit.
       5) Spill Prevention and Control - Implement procedures to contain and clean-up spills and prevent material discharges to the storm drain system and waters of the state.
       6) Concrete Residuals and Washout Wastes - Designate temporary concrete washout facilities for rinsing out concrete trucks. Provide directions to truck drivers where designated washout facilities are located.
       7) Vehicle and Equipment Cleaning - Employ washing practices that prevent contamination of surface and ground water from wash water.
       8) Vehicle and Equipment Fueling and Maintenance - Perform on site fueling and maintenance in accordance with all environment laws such as proper storage of onside fuels and proper disposal of used engine oil or other fluids on site.
       9) Litter Management - Ensure employees properly dispose of litter.
  3. APPROVED STATE OR LOCAL PLANS
     During the course of this construction, it is possible that situations will arise where unknown materials will be encountered. When such situations are encountered, they will be handled according to all federal, state, and local regulations in effect at the time.

IV. MAINTENANCE PROCEDURES
The contractor is required to maintain all temporary erosion and sediment control measures in proper working order, including cleaning, repairing, or replacing them throughout the contract period. This shall begin when the features have lost 50% of their capacity.

V. INSPECTION REQUIREMENTS
- A. Inspections shall be made jointly by the contractor and the contracting authority at least once every seven calendar days. Storm water monitoring inspections will include:
  1. Date of the inspection.
  2. Summary of the scope of the inspection.
  3. Name and qualifications of the personnel making the inspection.
  4. Rainfall amount.
  5. Review erosion and sediment control measures within disturbed areas for the effectiveness in preventing impacts to receiving waters.
  6. Major observations related to the implementation of the PPP.
  7. Identify corrective actions required to maintain or modify erosion and sediment control measures.
- B. Include storm water monitoring inspection reports in the Amended PPP. Incorporate any additional erosion and sediment control measures determined as a result of the inspection. Immediately begin corrective actions on all deficiencies found and complete all actions within 3 calendar days of the inspection.

VI. NON-STORM WATER DISCHARGES
This includes subsurface drains (i.e. longitudinal and standard subdrains) and slope drains. The velocity of the discharge from these features may be controlled by the use of patio blocks, Class A stone, erosion stone or other appropriate materials.

VII. POTENTIAL SOURCES OF OFF RIGHT-OF-WAY (ROW) POLLUTION
Silts, sediment, and other forms of pollution may be transported onto highway right-of-way (ROW) as a result of a storm event. Potential sources of pollution located outside highway ROW are beyond the control of this PPP. Pollution within highway ROW will be conveyed and controlled per this PPP.

VIII. DEFINITIONS
- A. Base PPP - Initial Pollution Prevention Plan.
- B. Amended PPP - May include Plan Revisions or Contract Modifications for new items and fieldbook entries made by the inspector.
- C. IDR - Inspector's Daily Report – this contains the inspector's daily diary and item postings.
- D. Controls - Methods, practices, or measures to minimize or prevent erosion, control sedimentation, control storm water, or minimize contaminants from other types of waste or materials.
- E. Signature Authority - Representative from Designer, Contractor/Subcontractor, or RCE/Inspector authorized to sign various storm water documents.

CERTIFICATION STATEMENT
I certify under penalty of law that this document and all attachments were prepared under my direction or supervision in accordance with a system designed to assure that qualified personnel properly gathered and evaluated the information submitted. Based on my inquiry of the person or persons who manage the system, or those persons directly responsible for gathering the information, the information submitted is, to the best of my knowledge and belief, true, accurate, and complete. I am aware that there are significant penalties for submitting false information, including the possibility of fine and imprisonment for knowing violations.

_____
Signature

_____
Printed or Typed Name

100-17
04-20-10

TABULATION OF SILT FENCES

Refer to EC-201

Location			Length	Remarks
Begin Station	End Station	Side	LF	
112+00.00	112+95.00	LT	115.0	
113+55.00	114+50.00	LT	115.0	
			60.0	DISCRETIONARY

100-18
04-20-10

TABULATION OF SILT FENCES FOR DITCH CHECKS

Refer to EC-201

Location Station	Side	Length	Remarks
		LF	
113+10	LT	20.0	
113+10	RT	20.0	
113+50	LT	20.0	
113+50	RT	20.0	
		40.0	DISCRETIONARY

100-10
10-21-14

FLOATING SILT CURTAINS

Refer to EC-202

Station	Hanging	Containment	Clean-out (Containment)	Maintenance of Floating Silt Curtain	Remarks
	LF	LF	LF	LF	
113+20	100.0			50.0	
113+30	100.0			50.0	

100-19
10-16-12

PERIMETER AND SLOPE SEDIMENT CONTROL DEVICE

Refer to EC-204

Location			Length of Installation				Remarks
Begin Station	End Station	Side	6 inch Dia	9 inch Dia	12 inch Dia	20 inch Dia	
			LF	LF	LF	LF	
112+90.00						100.0	
113+50.00						100.0	
					200.0		DISCRETIONARY

110-1
04-16-13

REMOVAL OF PAVEMENT

Refer to Tabulation 102-5

* Not a Bid Item

Begin Station	End Station	Side	Pavement Type	Area	Saw Cut*	Remarks
				SY	LF	
112+00.00	113+10.40	BOTH	HMA	245.3	20.0	
113+52.60	114+80.00	BOTH	HMA	374.9	65.0	INCLUDES SIDEROAD CONNECTION

110-17
04-15-14

CLEARING AND GRUBBING

Location		Work and Material Type	Trees, Stumps, and Logs and Down Timber Material Diameters													All Other Materials		Estimated Quantities			Remarks
Station to Station or Milepost to Milepost or Description	Direction of Travel		3"-6"	>6"-9"	>9"-12"	>12"-15"	>15"-18"	>18"-24"	>24"-30"	>30"-36"	>36"-42"	>42"-48"	>48"-60"	>60"-72"	>72"	Length	Width	Units	Area	Herbicide Application	
																FT	FT	Units	Acres	Each	
113+95 TO 114+79	RT	Brush - Clearing														83.0	5.0	3.3			

103-4
04-19-11

TABULATION OF SPREADING TOPSOIL

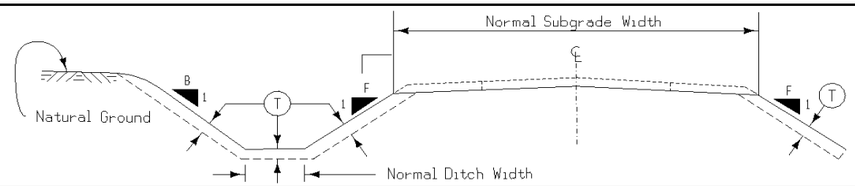

Perform this work according to Section 2105. Prior to placing topsoil on any cohesive soil, scarify the area to be covered to a minimum depth of 3 inches.

Appropriate adjustments have been made in the template quantities to reflect the placement of topsoil on foreslope, backslope and ditch bottom as detailed hereon.

Placement Description							Remarks	Topsoil Excavation Available From			Remarks
Area	Quantity	Location		Side	Slope	T		Amount Reserved	Station to Station		
No.	CY	Station to Station		L. or R.	B. or F.	IN		CY			
1	30.6	112+00.00	113+10.00	L	F	6.0	REPLACE STRIPPED TOPSOIL	42.8	112+00.00	113+10.00	STRIP 9 INCHES EXISTING TOPSOIL
2	30.6	112+00.00	113+10.00	R	F	6.0	REPLACE STRIPPED TOPSOIL	42.8	112+00.00	113+10.00	STRIP 9 INCHES EXISTING TOPSOIL
3	27.2	113+52.00	114+50.00	L	F	6.0	REPLACE STRIPPED TOPSOIL	38.1	113+52.00	114+50.00	STRIP 9 INCHES EXISTING TOPSOIL
4	35.6	113+52.00	114+80.00	R	F	6.0	REPLACE STRIPPED TOPSOIL	49.8	113+52.00	114+80.00	STRIP 9 INCHES EXISTING TOPSOIL

108-13A
08-01-08

SAFETY CLOSURES

Refer to Section 2518 of the Standard Specifications

Station	Closure Type		Remarks
	Road Qty.	Hazard Qty.	
	1		PARK ENTRANCE
112+70.00		1	
113+82.00		1	

103-7
08-01-08

SHRINKAGE DATA

Material	%	Remarks
CLASS 10	30%	
TOPSOIL	40%	
ESTIMATED BOULDER QTY		10 CY

102-5
10-16-12

EXISTING PAVEMENT

No.	Location					Year	Type	Project Number	Surface		Base		Subbase		Removal		Coarse Aggregate			Reinforcement	Remarks
	County	Route	Dir. of Travel	Begin Milepost	End Milepost				Type	Depth IN	Type	Depth IN	Type	Depth IN	Type	Depth IN	Source	Type	Durability Class	Type	
1	GUTHRIE	650	BOTH			UNKNOWN	HMA		HMA	6											ESTIMATED PAVEMENT STRUCTURE

100-24
04-21-15

PCC PAVEMENT

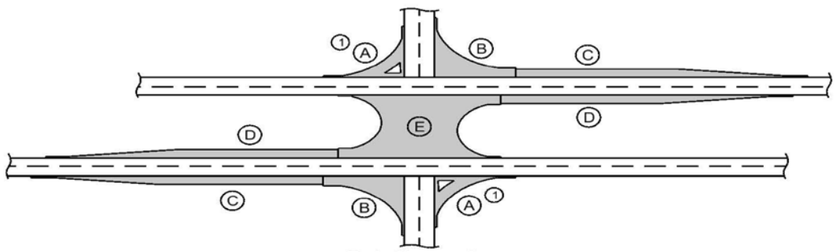

Typical Intersection

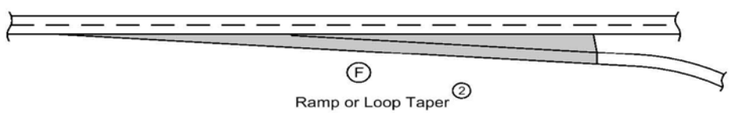

Ramp or Loop Taper (2)

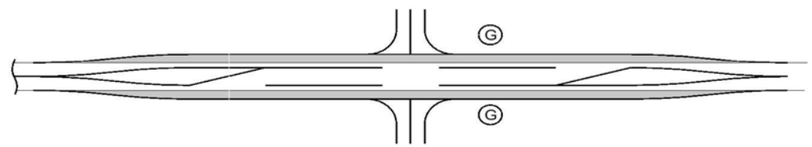

Channelized Intersection
Widen Existing Roadway

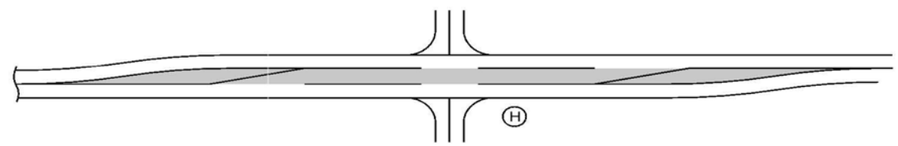

Channelized Intersection
Reconstructed Roadway

(1) Does not include raised island area or curb. Refer to tabulation 112-4 for quantities.

(2) Refer to PV-410, PV-411, PV-412, and PV-414.

(3) Quantity includes Pavement Header.

Location				Mainline			Area (3)								Total Area By Pavement Thickness		Special Backfill	Modified Subbase	Granular Subbase	Remarks
Road Identification	Direction of Travel	Station to Station		Width	Length	Area	A (1)	B	C	D	E	F (2)	G	H	SY 7 IN	SY 10½ IN	TONS	CY	SY	
				FT	FT	SY	SY	SY	SY	SY	SY	SY	SY	SY						
IA 650 - SITE 1	BOTH	112+00.00	112+21.30	24.0	21.3	56.8									56.8		22.7			
IA 650 - SITE 1	BOTH	114+32.50	114+80.00	24.0	47.5	126.7									126.7		50.7			
SIDE ROAD LT		114+22.50	114+80.00		57.5			66.0							66.0		20.8			

112-6
04-21-15

BRIDGE APPROACH SECTION

Refer to the BR Series.

* Not a bid item

Location				Approach Pavement					Fixed or Movable Abutment	Standard Road Plan	Subdrain					* Modified Subbase	* Polymer Grid	Remarks
Bridge Station	End	Skew Ahead Degrees LEFT	Skew Ahead Degrees RIGHT	(T) Thickness	Pay Length	Non-Reinf. Pavement Area	Single-Reinf. Pavement Area	Double-Reinf. Pavement Area			* Perforated Subdrain 4"	* Subdrain Outlet		* Porous Backfill	* Class 'A' Crushed Stone Backfill			
				Inches	FT	SY	SY	SY	F or M	BR Series	LF	STA	Side	CY	CY	TON	SY	
113+27.00	S			13.0	70.0	133.3	71.1	0.0	M	BR-103	40.0	112+31.2	LT	3.0	1.5	213.000	233.0	
113+27.00	N			13.0	70.0	133.3	71.1	0.0	M	BR-103	42.0	114+22.5	LT	3.0	1.5	213.000	233.0	

SHOULDERS

(1) Lane(s) to which the shoulder is adjacent.
(2) Bid Item
(3) Applies only for Paved Shoulders constructed on project with existing granular shoulders.
(4) Does not include shrink.

Calculations assume a HMA unit weight (lbs/cf) of 0, a Special Backfill unit weight (lbs/cf) of 140, and a Granular Shoulder unit weight (lbs/cf) of 140.

Location					Quantities																			
Road Identification	Direction Of Traffic (1)	Station to Station		Side	P Width	G Width	L Length	Class 13 Excavation (3)	Hot Mix Asphalt		Binder	Paved Shoulder	Reinforced Paved Shoulder	Special Backfill				Modified Subbase	Granular Shoulder		Earth Shoulder Construction Alternates			Remarks
														HMA Alternate		PCC Alternate						HMA	PCC	
					FT	FT	FT	CY (2)	TON	TON/STA	TONS	SY (2)	SY (2)	TON (2)	TON/STA	TON (2)	TON/STA	CY (2)	TON (2)	TON/STA	STA (2)	CY (4)	CY (4)	
IA 650 - SITE 1		112+00.00	112+71.40	LT	0.0	3.0	71.4					0.0							14.6	20.4	0.7			
IA 650 - SITE 1		112+00.00	112+71.40	RT	0.0	3.0	71.4					0.0							14.6	20.4	0.7			
IA 650 - SITE 1		112+71.40	112+86.40	LT	0.0	0.0	15.0					0.0							0.0	0.0	0.2			BR. APPROACH
IA 650 - SITE 1		112+71.40	112+86.40	RT	0.0	0.0	15.0					0.0							0.0	0.0	0.2			BR. APPROACH
BRIDGE																								
IA 650 - SITE 1		113+67.40	113+82.50	LT	0.0	0.0	15.1					0.0							0.0	0.0	0.2			BR. APPROACH
IA 650 - SITE 1		113+67.40	113+82.50	RT	0.0	0.0	15.1					0.0							0.0	0.0	0.2			BR. APPROACH
IA 650 - SITE 1		113+82.50	114+48.20	LT	0.0	3.0	65.7					0.0							13.4	20.4	0.7			
IA 650 - SITE 1		113+82.50	114+80.00	RT	0.0	3.0	97.5					0.0							19.9	20.4	1.0			
IA 650 - SITE 1		114+78.00	114+82.00	LT	0.0	3.0	4.0					0.0							0.8	20.4	0.0			

PAVEMENT SMOOTHNESS + PCC TEXTURE

Road Identification	Begin Station	End Station	Proposed Posted Speed			Remarks
			35 or less	40 - 45	over 45	
IA 650 - SITE 1	112+00.00	112+91.00	X			SMOOTHNESS WAIVED / MICRO TEXTURE
IA 650 - SITE 1	113+62.5	114+80.00	X			SMOOTHNESS WAIVED / MICRO TEXTURE

SURVEY SYMBOLS

- PIP Pipe Culvert
- TDC Tree Deciduous
- BLD Building or Foundation
- MIS Miscellaneous
- SIGN SI Sign
- GP GP Guard Post (Less Than 4 Posts)
- TLNL Tree Line Left
- CUL Culvert
- OUT Tile Outlet
- BRG Bridge
- TLNR Tree Line Right
- SHR Shrub
- SIGN SL Speed Limit Sign
- CON Concrete or A/C Slab
- EP Edge of Paved Roads (ML or SR)
- EW Edge of Water
- BNK Stream Bank
- SP Stream Profile
- EG Edge of Gravel Road
- TW Top of Water

UTILITY LEGEND

- WHU WHU RV Water Hook Up
- WV WV Water Valve
- EB EB Electrical Box
- TP TPD Telephone Pedestal

PLAN VIEW COLOR LEGEND OF PLAN AND PROFILE SHEETS

LINEWORK	Design Color No.	
Green	(2)	Existing Topographic Features and Labels
Blue	(1)	Proposed Alignment, Stationing, Tic Marks, and Alignment Annotation
Magenta	(5)	Existing Utilities
SHADING	**Design Color No.**	
Yellow	(4)	Highlight for Critical Notes or Features
Red	(3)	Delineates Restricted Areas
Lavender	(9)	Temporary Pavement Shading
Gray, Light	(48)	Proposed Pavement Shading
Gray, Med	(80)	Proposed Granular Shading
Gray, Dark	(112)	Proposed Grade and Pave Shading "In conjunction with a paving project"
Brown, Light	(236)	Grading Shading
Tan	(8)	Proposed Sidewalk Shading
Blue, Light	(230)	Proposed Sidewalk Landing Shading
Pink	(11)	Proposed Sidewalk Ramp Shading

PROFILE VIEW COLOR LEGEND OF PLAN AND PROFILE SHEETS

LINEWORK	Design Color No.	
Green	(2)	Existing Ground Line Profile
Blue	(1)	Proposed Profile and Annotation
Magenta	(5)	Existing Utilities
Blue, Light	(230)	Proposed Ditch Grades, Left
Black	(0)	Proposed Ditch Grades, Median
Rust	(14)	Proposed Ditch Grades, Right

- Reference Point
- Station
- Survey Line
- Section Corner
- Ground Line Intercept
- Saw Cut
- Guardrail
- Trench Drain
- HighTension Cable Guardrail
- Sheet Pile
- Pavement Removal
- Clearing & Grubbing Area

RIGHT-OF-WAY LEGEND

- Proposed Right-of-Way
- Existing Right of Way
- Existing and Proposed Right-of-Way
- Easement and Existing Right-of-Way
- Easement (Temporary)
- Easement
- C/A Access Control
- Property Line

PLAN AND PROFILE LEGEND AND SYMBOL INFORMATION SHEET

(COVERS SHEET SERIES D, E, F, & K)

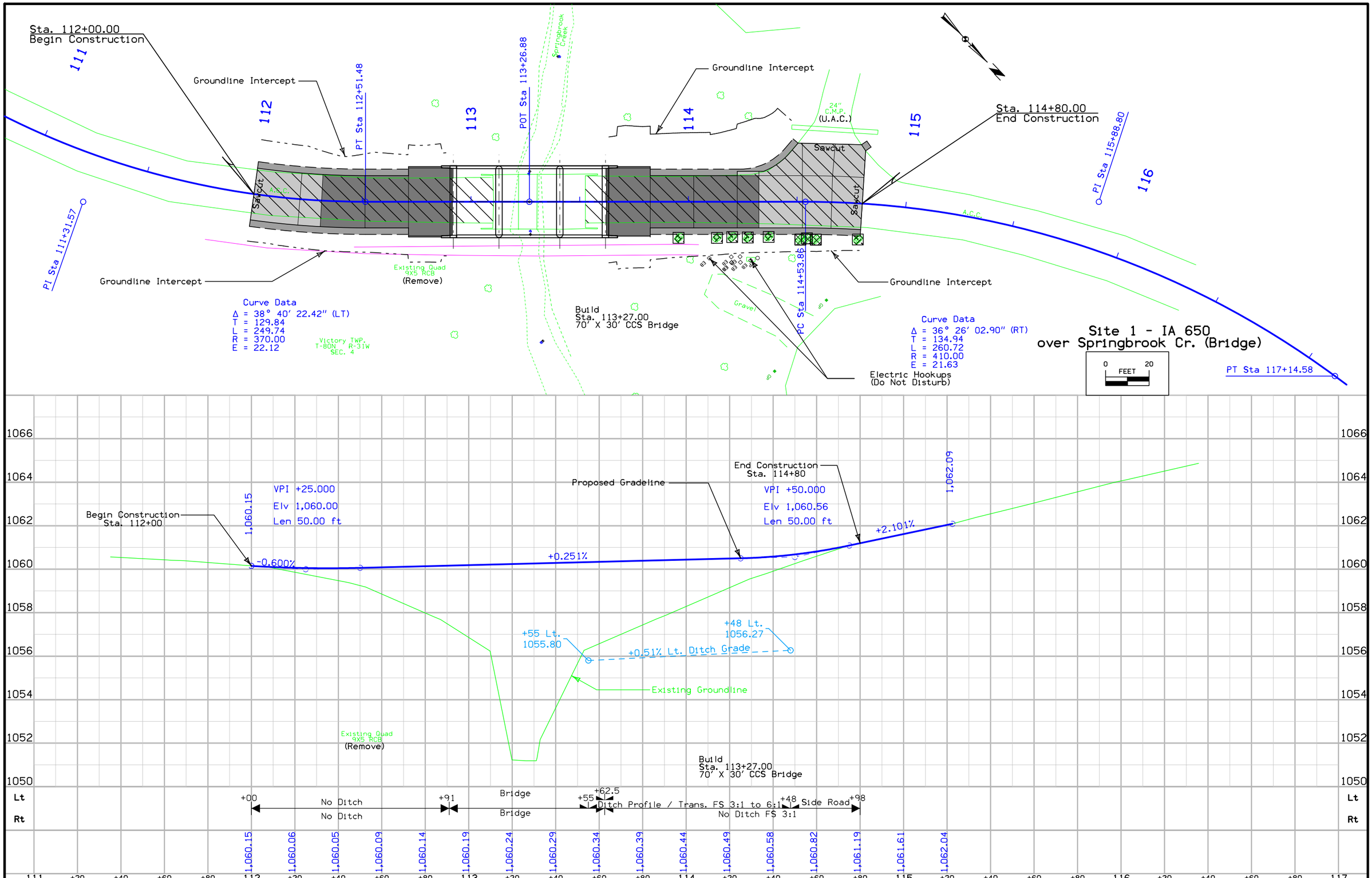

FILE NO. 31222	ENGLISH	DESIGN TEAM hgm	GUTHRIE COUNTY	PROJECT NUMBER SP-650-0(9)--7C-39	SHEET NUMBER D.2

2:58:31 PM 4/4/2015 BTH W:\Projects\3965001012\Design\3965009D2.dgn

STA. 206+33.29, RT. 242.27' LT. (S - 2)
C.P. 500 - Base Point A
N=648272.970, E=1376670.780

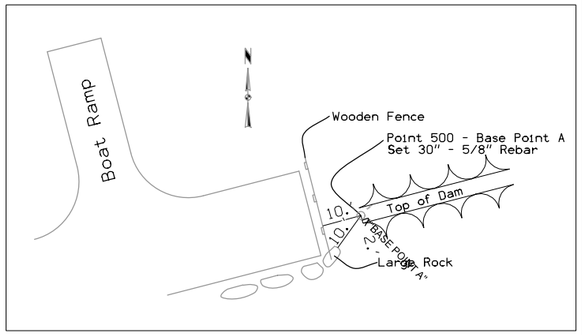

STA. 210+54.11, 73.57' RT. (S - 2)
C.P. 102
N=648072.069, E=1377156.037

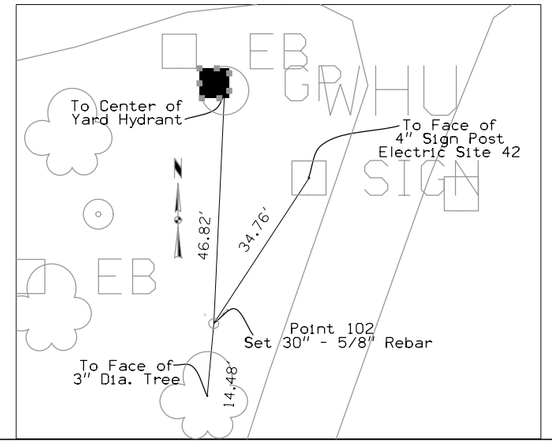

STA. 213.82.41, 16.35' LT.' RT. (S-2)
C.P. 104
N=648054.555, 1377445.437

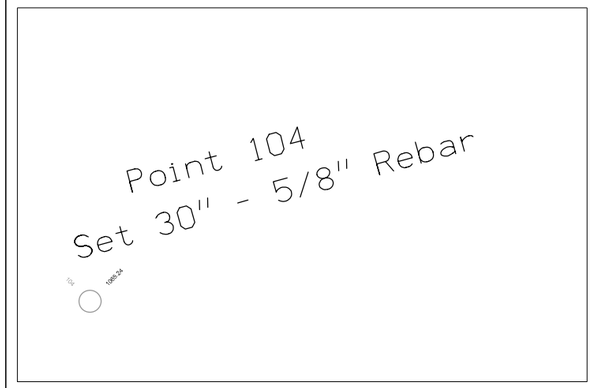

STA. 115+61.72, LT. 196.993 (S - 1)
C.P. 103, 30" X 5/8" REBAR
N=647512.69, E=1376520.51

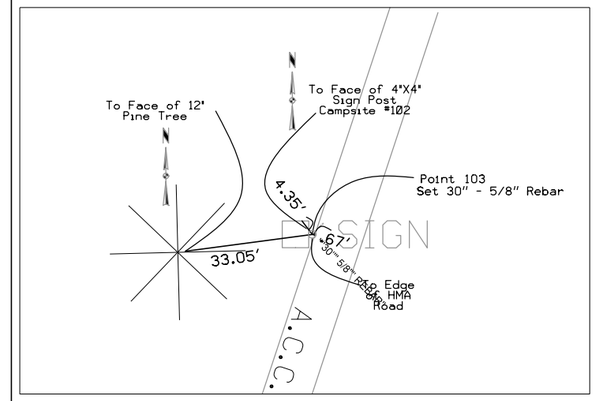

C.P. STA. 113+60.07, 22.22 LT.(S - 1)
C.P. 101, 30" X 5/8" REBAR
N=647245.716, E=1376472.426

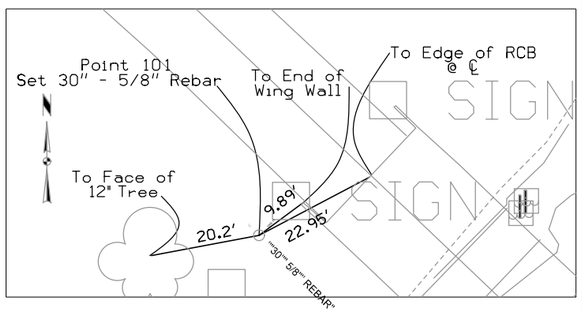

VERTICAL CONTROL

Point	North	East	Elevation	Station	Offset	Feature	Description
101	647245.716	1376472.426	1056.167	113+60.07	-22.217	CP	""30"" 5/8"" REBAR", Site 1
103	647512.690	1376520.510	1060.190	115+61.72	196.993	CP	""30"" 5/8"" REBAR", Site 1
Point	North	East	Elevation	Station	Offset	Feature	Description
102	648072.069	1377156.037	1062.350	114+34.69	1047.650	CP	Site 2
104	648054.555	1377445.437	1065.240	112+42.70	1234.966	CP	Site 2
500	648272.970	1376670.780	1000.000	Off Chain	Off Chain	CP	""BASE POINT A" Site 2

ALIGNMENT COORDINATES

101-16
10-20-09

Name	Location	Point on Tangent			Begin Spiral			Begin Curve			Simple Curve PI or Master PI of SCS			End Curve			End Spiral		
		Station	Coordinates		Station	Coordinates		Station	Coordinates		Station	Coordinates		Station	Coordinates		Station	Coordinates	
			Y (Northing)	X (Easting)		Y (Northing)	X (Easting)		Y (Northing)	X (Easting)		Y (Northing)	X (Easting)		Y (Northing)	X (Easting)		Y (Northing)	X (Easting)
20000	IA 650 - SITE 1	109+01.86	646,869.88	1,376,691.28															
20001	IA 650 - SITE 1							110+01.74	646,968.84	1,376,677.83	111+31.57	647,097.50	1,376,660.35	112+51.48	647,187.02	1,376,566.31			
20002	IA 650 - SITE 1	113+26.88	647,239.01	1,376,511.70															
20003	IA 650 - SITE 1							114+53.86	647,326.56	1,376,419.72	115+88.80	647,419.60	1,376,321.99	117+14.58	647,552.49	1,376,298.61			
20004	IA 650 - SITE 1	118+14.33	647,650.74	1,376,281.33															

SPIRAL OR CIRCULAR CURVE DATA

101-17
04-19-11

Name	Location	Δ_{scs}	Horizontal Alignment Data													Remarks
			Spiral Data								Curve Data					
			θs	Ls	Ts	Es	Xc	Yc	L.T.	S.T.	Δ_c	T	L	R	E	
20001	IA 650 - SITE 1										38° 40′ 22.42″ LT	129.84′	249.74′	370.00′	22.12′	
20003	IA 650 - SITE 1										36° 26′ 02.90″ RT	134.94′	260.72′	410.00′	21.63′	

108-23A
08-01-08

TRAFFIC CONTROL PLAN

IA 650, Site 1, will be closed to traffic during construction. IA 650 is the primary access to Springbrook State Park. Road Closure will be installed at the entrance to the park. Additional Hazard Closures will be placed in the proximity of the Site 1 Project.

Contractor shall utilize Standard Road Plans TC-1, TC-202 and TC-252, Situation 5.

111-01
04-17-12

COORDINATED OPERATIONS

Other work in progress during the same period of time will include the construction of the projects listed. Coordinate operations with those of other contractors working within the same area.

Project	Type of Work
SP-650-0(10)--7C-39	RCB CONSTRUCTION

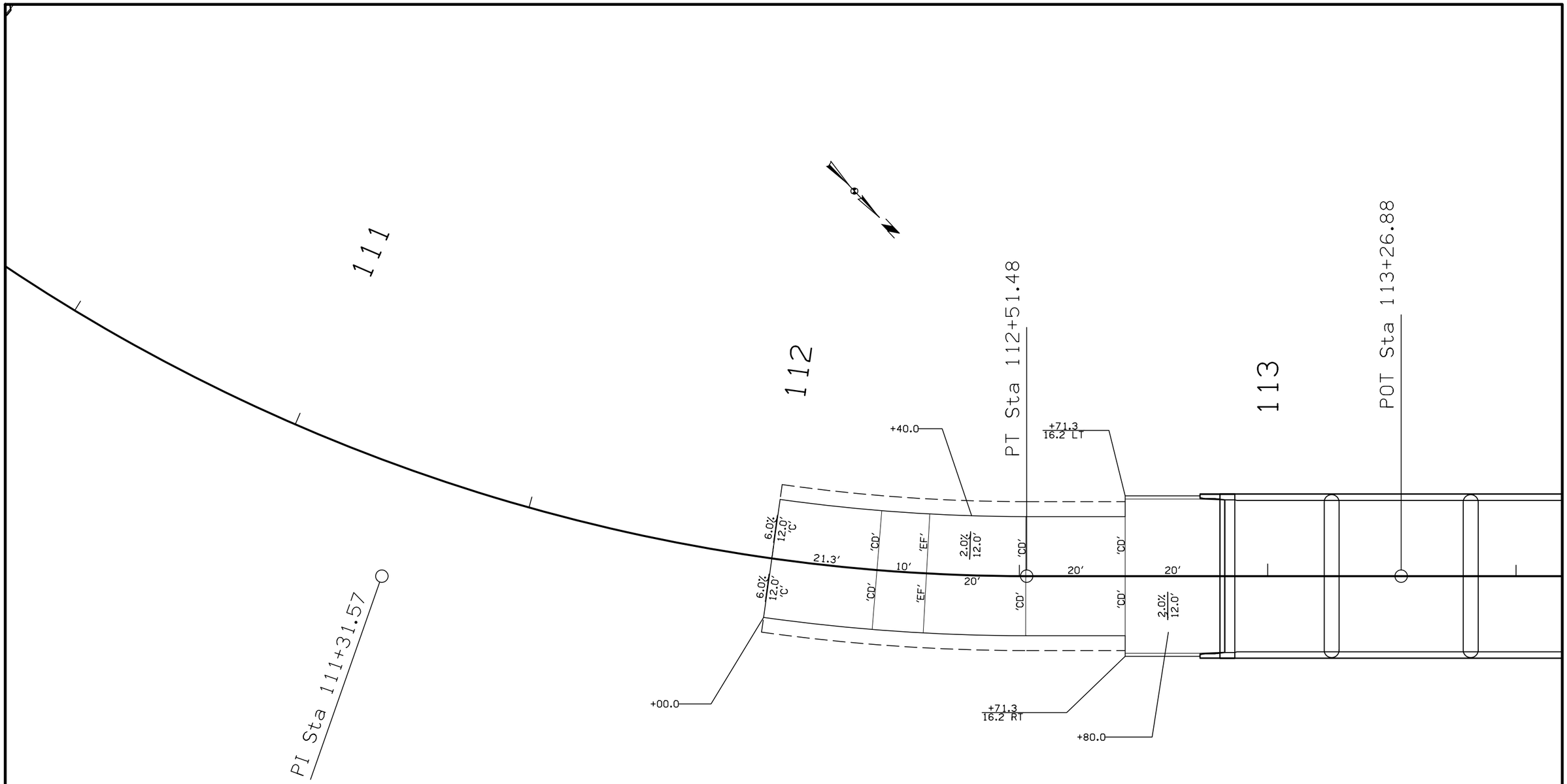

Curve Data

Δ = 38° 40′ 22.42″ (LT)
T = 129.84
L = 249.74
R = 370.00
E = 22.12

0 FEET 10

FILE NO. 31222	ENGLISH	DESIGN TEAM hgm	GUTHRIE COUNTY	PROJECT NUMBER SP-650-0(9)--7C-39	SHEET NUMBER L.1

3:00:14 PM 4/2/2015 BTH W:\Projects\3965001012\Design\3965009L1.dgn

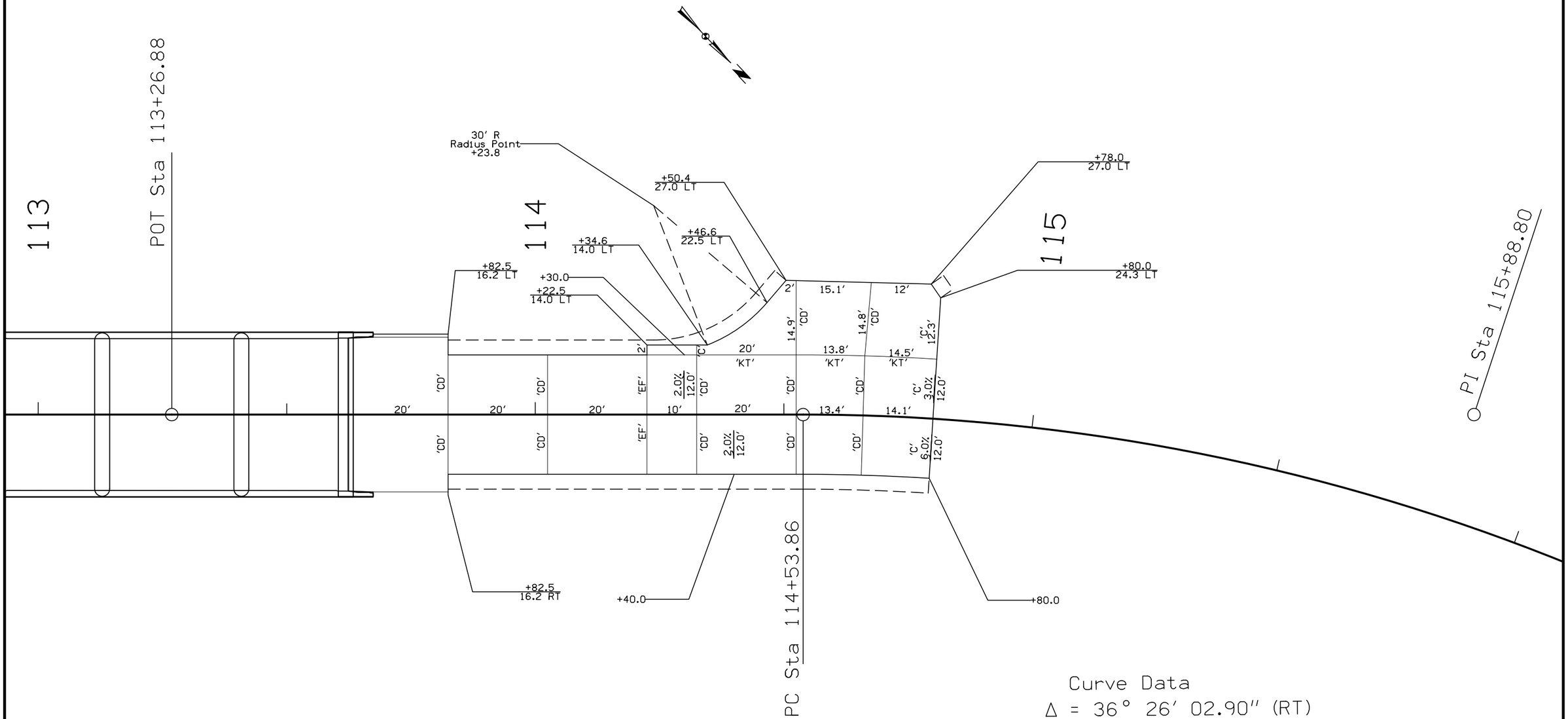

Curve Data

Δ = 36° 26′ 02.90″ (RT)
T = 134.94
L = 260.72
R = 410.00
E = 21.63

0 FEET 10

FILE NO. 31222	ENGLISH	DESIGN TEAM hgm	GUTHRIE COUNTY	PROJECT NUMBER SP-650-0(9)--7C-39	SHEET NUMBER L.2

3:00:16 PM 4/2/2015 BTH W:\Projects\3965001012\Design\3965009L1.dgn

TABULATION OF TEMPLATE QUANTITIES AND ADJUSTMENTS

Refer to Standard Road Plans EW-101 and EW-102.

STATION	TOTAL CUT	CLASS 10 SUITABLE CUT	ADJUSTED CLASS 10 TOTAL	TOTAL FILL	CLASS 10 SUITABLE + 30% SHRINK	TOTAL FILL WITH SHRINK		APPROX. FILL VOLUME BELOW 3 FT	APPROX. FILL VOLUME BELOW 5 FT				
112+00.00	19	19	19	9	12	12		9	9				
112+25.00	20	20	20	6	8	8		6	6				
112+50.00	12	12	12	9	12	12		9	9				
112+75.00	4	4	4	42	55	55		42	42				
113+75.00	3	3	3	32	42	42		32	32				
114+00.00	9	9	9	7	9	9		7	7				
114+25.00	12	12	12	14	18	18		14	14				
114+50.00	12	12	12	7	9	9		7	7				
114+65.00	10	10	10	2	3	3		2	2				
114+75.00	6	6	6	1	1	1		1	1				
114+80.00								0	0				
Totals	107	107	107	129	169	169	0	129	129				

STATION	TOTAL CUT	CLASS 10 SUITABLE CUT	ADJUSTED CLASS 10 TOTAL	TOTAL FILL	CLASS 10 SUITABLE + 30% SHRINK	TOTAL FILL WITH SHRINK		APPROX. FILL VOLUME BELOW 3 FT	APPROX. FILL VOLUME BELOW 5 FT				

LINE STYLE LEGEND OF CROSS SECTION SHEETS (ROAD)

- Existing Ground Line
- Proposed Template
- Proposed Topsoil Placement
- Additional Topsoil Removal
- Subrade Treatment
- Granular Shoulder
- Pavement
- Existing Pipe\RCB
- Proposed Pipe\RCB
- Proposed Dike
- All Elements Associated with Proposed Entrances

LINE STYLE LEGEND OF CROSS SECTION SHEETS (SOILS)

- TS — Topsoil (Class 10)
- TS A — Topsoil (Type A Disposal)
- TS B — Topsoil (Type B Disposal)
- TS C — Topsoil (Type C Disposal)
- CL 10 — Class 10 Materials
- SEL LO — Select Loams And Clay-Loams
- SEL SA — Select Sand
- UNS A — Unsuitable Type A Disposal
- UNS B — Unsuitable Type B Disposal
- UNS C — Unsuitable Type C Disposal
- SHALE — Shale
- WASTE — Waste
- B&W LS — Broken and Weathered Rock
- ROCK — Solid Rock
- BLDRS — Boulders

Note: All layer lines and descriptions identify layers above the line.

Note: Vertical or near vertical lines connecting soil layers at edges of cross sections are only for the purpose of calculating template quantities and do not depict soil stratification.

SYMBOL LEGEND OF CROSS SECTION SHEETS

Existing ROW — Existing Right-of-Way Limit

Proposed ROW — Proposed Right-of-Way Limit

Temporary ROW — Temporary Right-of-Way Limit

CROSS SECTION LEGEND AND SYMBOL INFORMATION SHEET

(COVERS SHEET SERIES W, X, Y, & Z)

Site 1 – IA 650

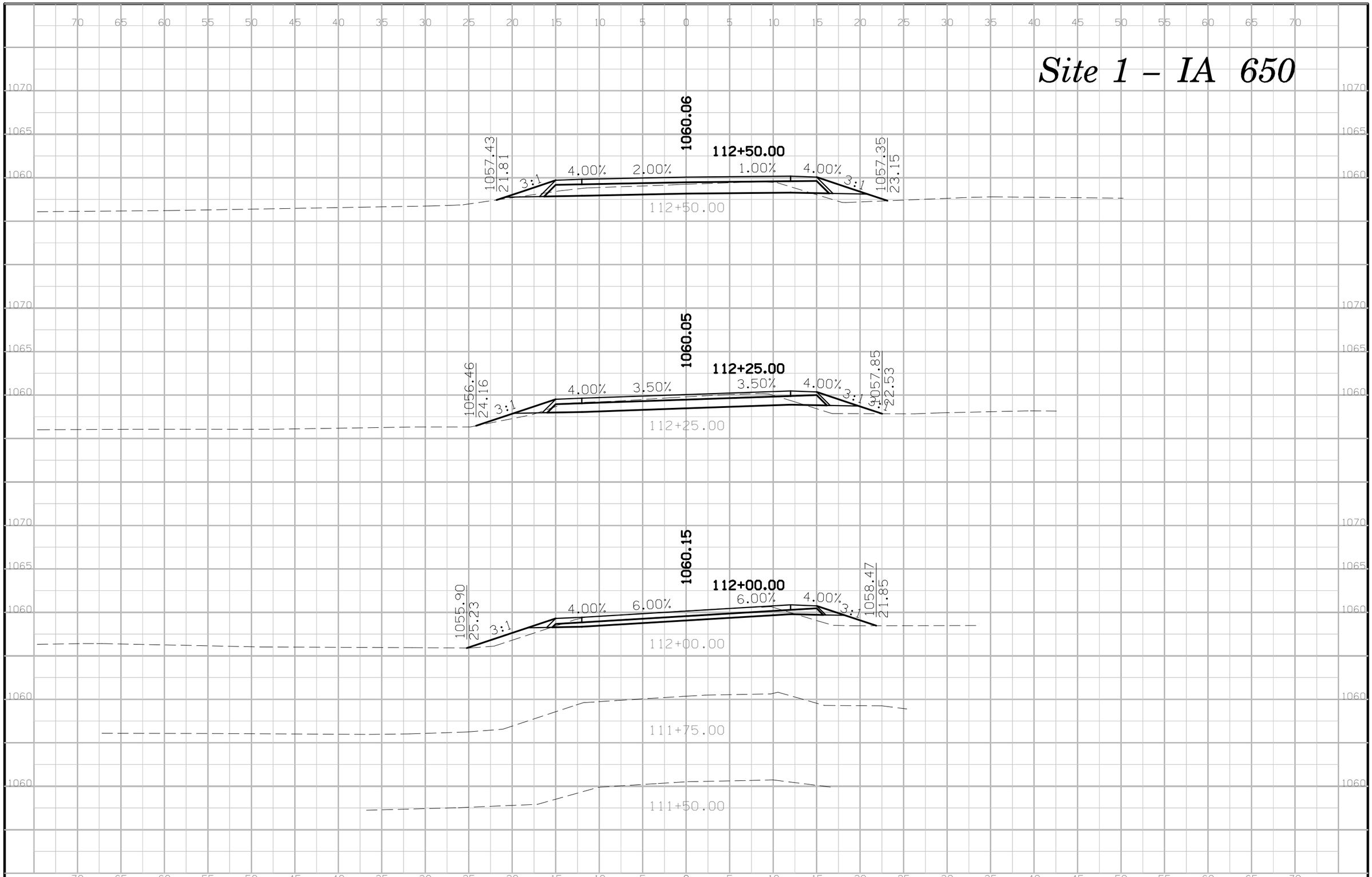

FILE NO. 31222	ENGLISH	DESIGN TEAM hgm	GUTHRIE COUNTY	PROJECT NUMBER SP-650-0(9)--7C-39	SHEET NUMBER W.2

1:13:20 PM 4/4/2015 BTH W:\Projects\3965001012\Design\3965009w1.sht

Site 1 – IA 650

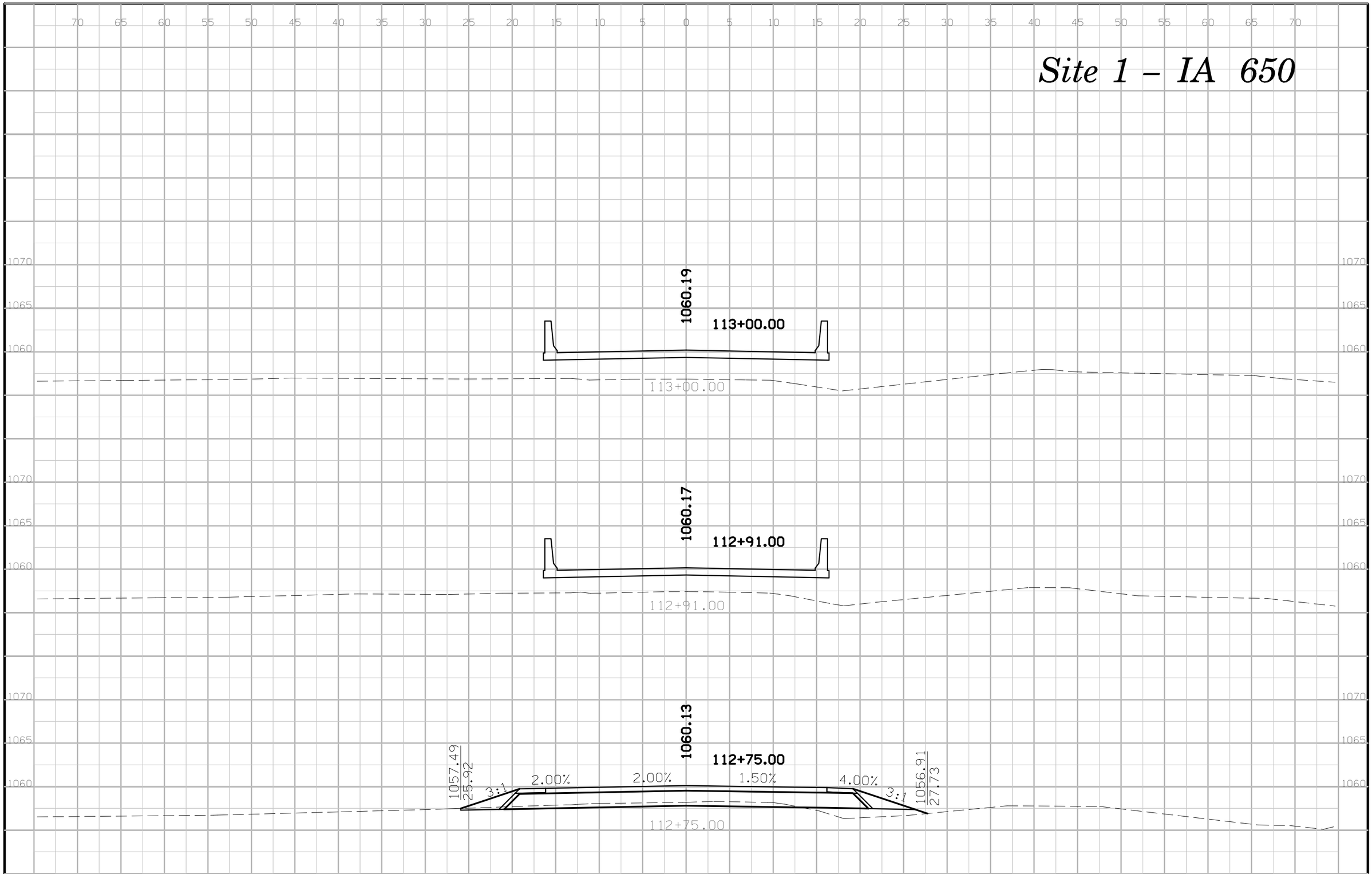

FILE NO. 31222	ENGLISH	DESIGN TEAM hgm	GUTHRIE COUNTY	PROJECT NUMBER SP-650-0(9)--7C-39	SHEET NUMBER W.3

1:13:21 PM 4/4/2015 BTH W:\Projects\3965001012\Design\3965009w1.sht

Site 1 – IA 650

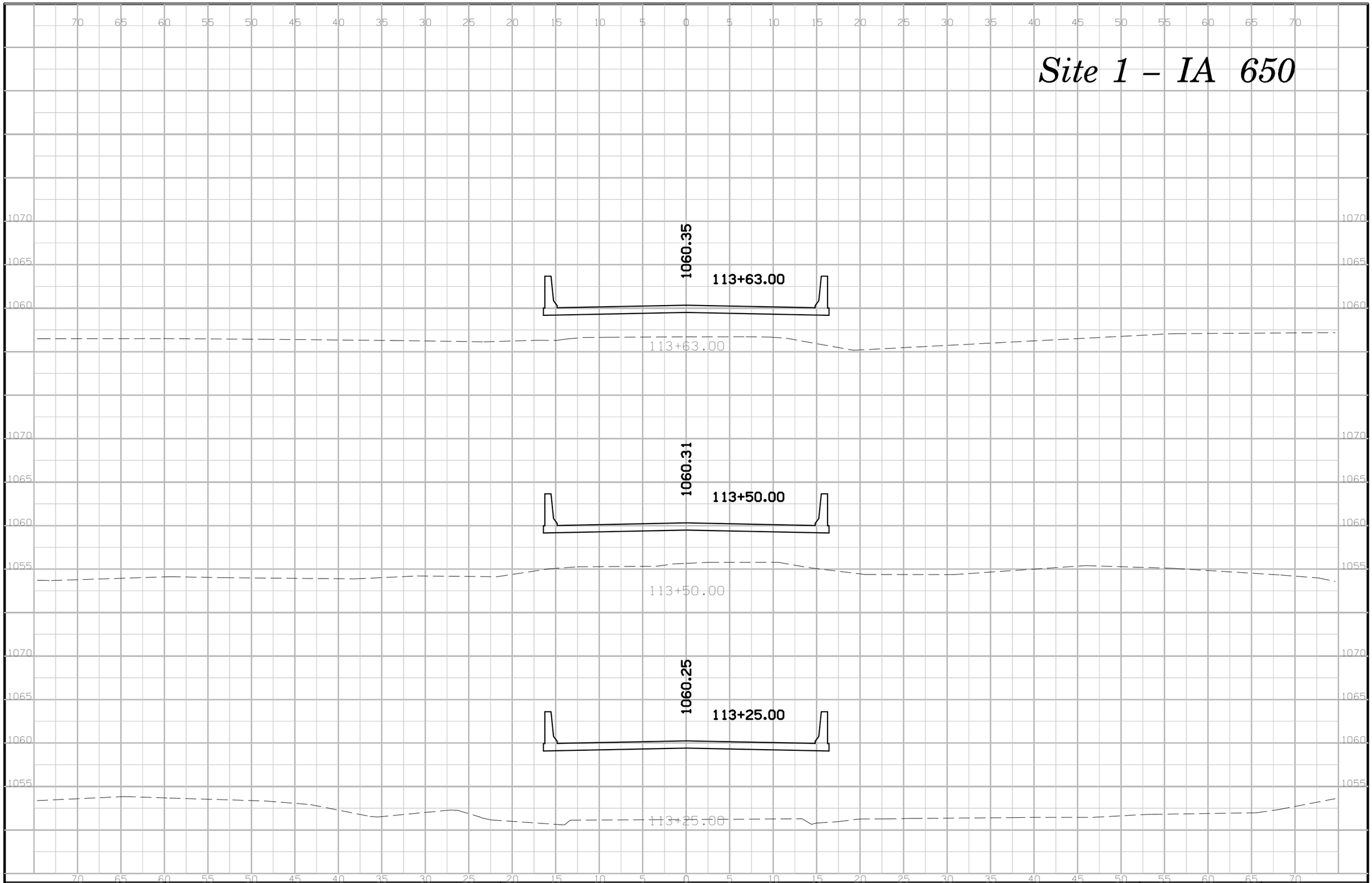

FILE NO. 31222	ENGLISH	DESIGN TEAM hgm	GUTHRIE COUNTY	PROJECT NUMBER SP-650-0(9)--7C-39	SHEET NUMBER W.4

1:13:21 PM 4/4/2015 BTH W:\Projects\3965001012\Design\3965009w1.sht

Site 1 – IA 650

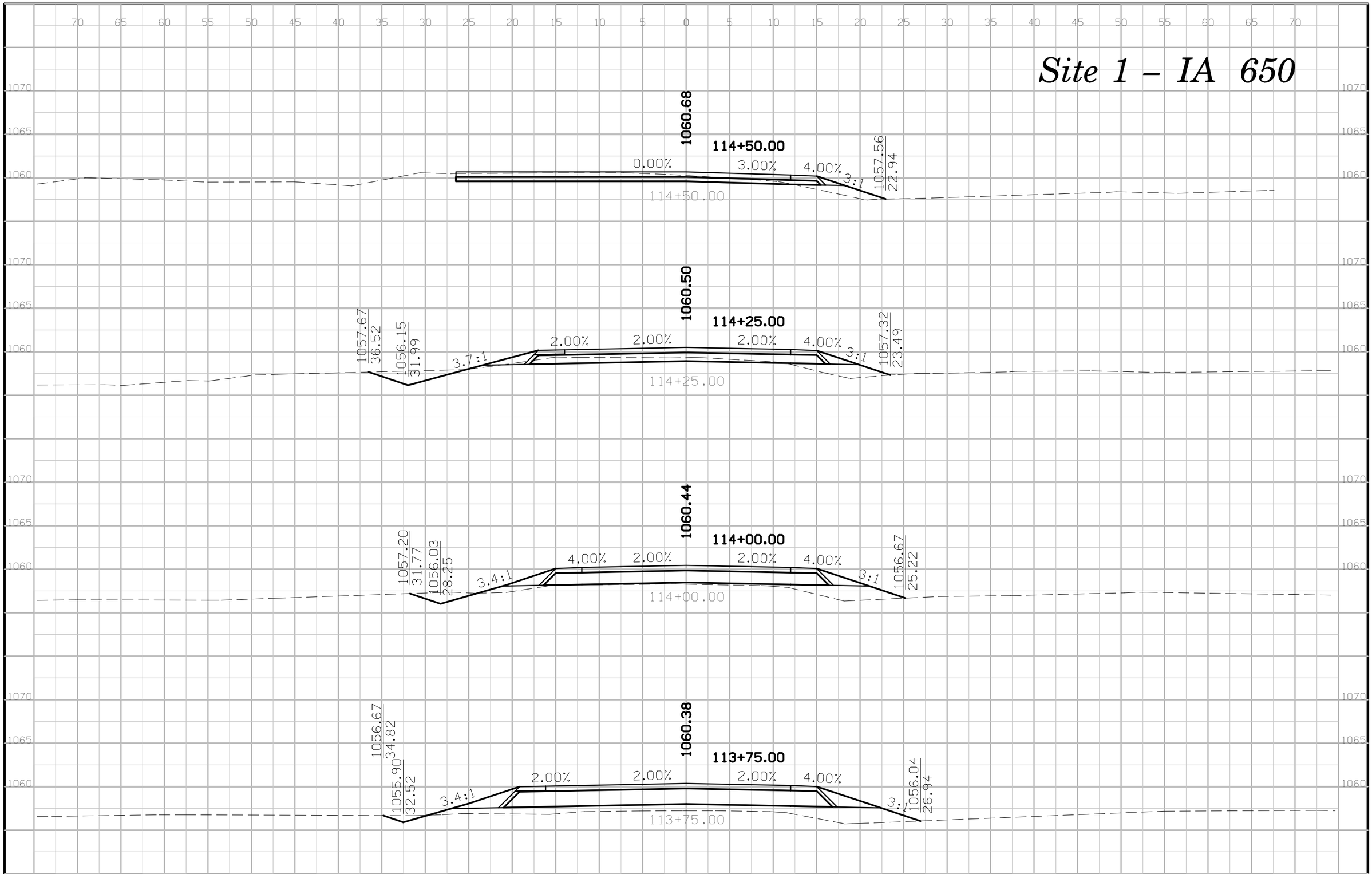

FILE NO. 31222	ENGLISH	DESIGN TEAM hgm	GUTHRIE COUNTY	PROJECT NUMBER SP-650-0(9)--7C-39	SHEET NUMBER W.5

1:13:21 PM 4/4/2015 BTH W:\Projects\3965001012\Design\3965009w1.sht

Site 1 – IA 650

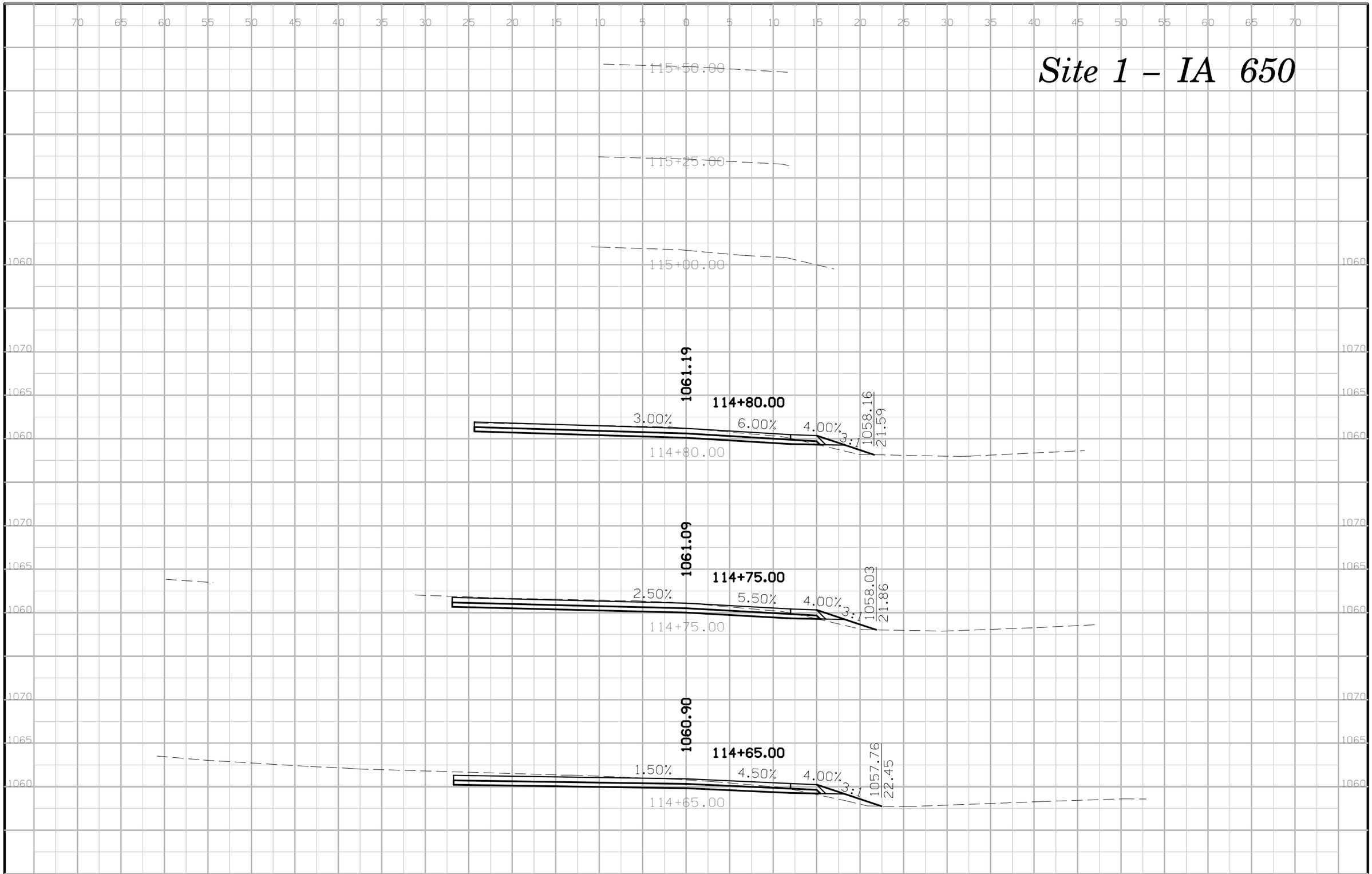

FILE NO. 31222	ENGLISH	DESIGN TEAM hgm	GUTHRIE COUNTY	PROJECT NUMBER SP-650-0(9)--7C-39	SHEET NUMBER W.6

1:13:22 PM 4/4/2015 BTH W:\Projects\3965001012\Design\3965009w1.sht

RCB CULVERT NEW - TWIN BOX
SP-650-0(10)--7C-39

LETTING DATE
JULY 21, 2015

GUTHRIE COUNTY - DESIGN NO. 315

GUTHRIE COUNTY

LEGEND

- INTERSTATE HIGHWAY
- PRIMARY HIGHWAY-DIVIDED
- PRIMARY HIGHWAY
- PORTLAND CEMENT CONCRETE ROAD
- ASPHALT ROAD
- BITUMINOUS ROAD
- GRAVEL ROAD
- EARTHEN ROAD
- INTERSTATE HIGHWAY (80)
- UNITED STATES HIGHWAY (65)
- STATE HIGHWAY (175)
- COUNTY HIGHWAY (S27)
- RAILROAD
- PIPELINE
- AIRPORT
- HYDROLOGY
- BRIDGE
- STATE BOUNDARY
- COUNTY BOUNDARY
- CORPORATE BOUNDARY
- TOWNSHIP LINE
- SECTION LINE
- ROAD NAMES — ABBEY ROAD
- UNINCORPORATED PLACE — ELWOOD

IOWA DOT
Highway Division

PLANS OF PROPOSED IMPROVEMENTS ON THE

STATE PARKS AND INSTITUTIONAL ROADS

GUTHRIE COUNTY

RCB CULVERT NEW - TWIN BOX

LOCAL ROAD OVER STREAM IN SPRINGBROOK STATE PARK

THE IOWA DEPARTMENT OF TRANSPORTATION STANDARD SPECIFICATIONS FOR HIGHWAY AND BRIDGE CONSTRUCTION, SERIES 2012, PLUS APPLICABLE GENERAL SUPPLEMENTAL SPECIFICATIONS, DEVELOPMENTAL SPECIFICATIONS, SUPPLEMENTAL SPECIFICATIONS AND SPECIAL PROVISIONS SHALL APPLY TO CONSTRUCTION WORK ON THIS PROJECT.

IOWA ONE CALL
1-800-292-8989
www.iowaonecall.com
811 Know what's below. Call before you dig.

DESIGN NO. 315

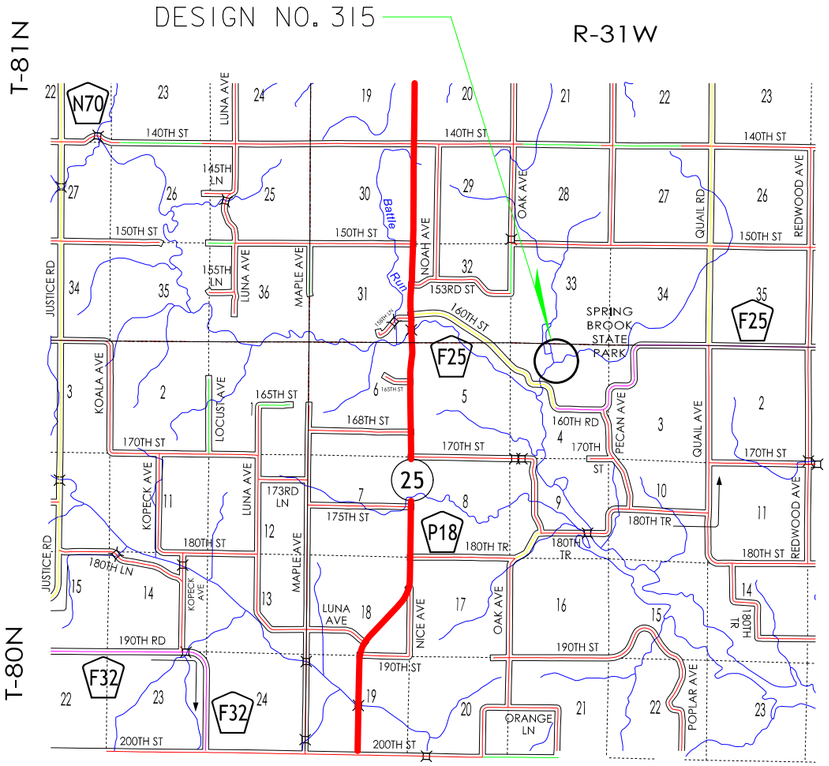

LOCATION MAP

PROJECT DIRECTORY NAME: 39650010I2

ENGLISH STANDARD CULVERT PLANS

STANDARD	ISSUED	REVISED
TWRCB G1-12	04-12	10-12
TWRCB G2-12	04-12	07-14
TWRCB 10-5-12	04-12	
TWH 15-1-12	04-12	
TWH 15-2-12	04-12	
TWH 15-3-12	04-12	
TWH 15-4-12	04-12	
TWH 15-5-12	04-12	05-13
TWH 15-8-12	04-12	

TOTAL SHEETS: 35

PROJECT NUMBER: SP-650-0(10)--7C-39

R.O.W. PROJECT NUMBER:

PROJECT IDENTIFICATION NUMBER: 12-39-650-010

INDEX OF SHEETS

NO.	DESCRIPTION
1	TITLE SHEET
2	ESTIMATE SHEET - DESIGN 315
2-11	DESIGN 315
SPS.1	SOIL PROFILE SHEET
C.1	ESTIMATE SHEET FOR ROADWAY
A.1-W.5	ROADWAY SHEETS

REVISIONS

STANDARD ROAD PLANS

STANDARD ROAD PLANS ARE LISTED ON SHEET NUMBER C.3

DESIGN DATA RURAL

2011	AADT	108	V.P.D.
2036	AADT	177	V.P.D.
2036	DHV		V.P.H.
TRUCKS		20	%
Total Design ESALs			

INDEX OF SEALS

SHEET NO.	NAME	TYPE
1	STEPHEN W. MOFFITT	STRUCTURAL DESIGN
1	WILLIAM L. KAUFMAN	HYDRAULIC DESIGN
A.1	BRIAN T. HIGGINBOTHAM	ROADWAY DESIGN
SPS.1	THERESA STROMBERG-MURPHY	GEOTECHNICAL DESIGN
CULVERT STANDARDS	NORMAN L. McDONALD	STRUCTURAL DESIGN

ALL WORKING DRAWINGS, INCLUDING SHOP DRAWINGS AND FALSEWORK DRAWINGS, WILL BE CHECKED BY:

HGM ASSOCIATES, INC.
5022 SOUTH 114TH ST., SUITE 200
OMAHA, NE 68137
smoffitt@hgmonline.com

HYDRAULIC DESIGN

LICENSED PROFESSIONAL ENGINEER William L. Kaufman 15098 IOWA

I hereby certify that this engineering document was prepared by me or under my direct personal supervision and that I am a duly licensed Professional Engineer under the laws of the State of Iowa.

Signature: William L. Kaufman — Date: 5-12-2015

Printed or Typed Name: William L. Kaufman

My license renewal date is December 31, 2015

Pages or sheets covered by this seal: SHEET 5

STRUCTURAL DESIGN

LICENSED PROFESSIONAL ENGINEER Stephen W. Moffitt 13124 IOWA

I hereby certify that this engineering document was prepared by me or under my direct personal supervision and that I am a duly licensed Professional Engineer under the laws of the State of Iowa.

Signature: Stephen W. Moffitt — Date: 4-27-2015

Printed or Typed Name: Stephen W. Moffitt

My license renewal date is December 31, 2015

Pages or sheets covered by this seal: SHEETS 1 THRU 4 AND 6 THRU 11

ESTIMATED CULVERT QUANTITIES

ITEM NO.	ITEM CODE	ITEM	UNIT	TOTAL	AS BUILT QUANTITY
1	2104-2710020	EXCAVATION, CLASS 10, CHANNEL	CY	217	
2	2107-3825025	GRANULAR MATERIAL FOR BLANKET AND SUBDRAIN	CY	59.3	
3	2113-0001100	SUBGRADE STABILIZATION MATERIAL, POLYMER GRID	SY	191.6	
4	2401-6745650	REMOVAL OF EXISTING STRUCTURES	LS	1.00	
5	2402-2720000	EXCAVATION, CLASS 20	CY	489	
6	2403-0100020	STRUCTURAL CONCRETE (RCB CULVERT)	CY	142.0	
7	2404-7775005	REINFORCING STEEL, EPOXY COATED	LB	19,376	
8	2404-7775009	REINFORCING STEEL, STAINLESS STEEL	LB	1,510	
9	2414-6424124	CONCRETE OPEN RAILING, TL-4	LF	74.8	
10	2507-3250005	ENGINEERING FABRIC	SY	440.0	
11	2507-6800061	REVETMENT, CLASS E	TON	334.3	
12	2533-4980005	MOBILIZATION	LS	1.00	

ESTIMATE REFERENCE INFORMATION

ITEM NO.	ITEM CODE	DESCRIPTION
1	2104-2710020	EXCAVATION, CLASS 10, CHANNEL ITEM INCLUDES COST TO CLEAR THE CHANNEL TO THE SHAPE, DEPTH, AND EXTENT SHOWN IN THE PLANS. QUANTITY OF EXCAVATION IS 217 CU. YDS. (CUT) AND 0 CU. YDS. (FILL + 40%). EXCESS MATERIAL MAY BE USED AS ROADWAY BORROW IF DEEMED SUITABLE BY THE ENGINEER. UNUSED MATERIAL SHALL BE DISPOSED OF OFF THE PROJECT SITE ACCORDING TO APPLICABLE FEDERAL, STATE, AND LOCAL REGULATIONS.
2	2107-3825025	GRANULAR MATERIAL FOR BLANKET AND SUBDRAIN SEE DESIGN SHEET 4 FOR PLACEMENT LIMITS AND DETAILS. THE MATERIAL SHALL BE SCREENED 1-1/2" PIPE BEDDING MATERIAL.
3	2113-0001100	SUBGRADE STABILIZATION MATERIAL, POLYMER GRID POLYMER GRID SHALL BE PLACED UNDERNEATH AND AT THE LIMITS OF GRANULAR BACKFILL. SEE DESIGN SHEET 4 FOR DETAILS.
4	2401-6745650	REMOVAL OF EXISTING STRUCTURES ITEM IS FOR THE REMOVAL AND DISPOSAL OF THE EXISTING STRUCTURE. THE STRUCTURE HAS FOUR, 15" CORRUGATED METAL PIPES. ALL STRUCTURAL ITEMS THAT ARE REMOVED SHALL BECOME THE PROPERTY OF THE CONTRACTOR, AND SHALL BE DISPOSED OF OFF THE PROJECT SITE ACCORDING TO APPLICABLE FEDERAL, STATE, AND LOCAL REGULATIONS.
5	2402-2720000	EXCAVATION, CLASS 20 QUANTITY OF EXCAVATION BASED ON CROSS SECTIONS IS 390 CY (CUT) AND 0 CU. YDS. (FILL + 40%). EXCESS MATERIAL MAY BE USED AS ROADWAY BORROW IF DEEMED SUITABLE BY THE ENGINEER. UNUSED MATERIAL SHALL BE DISPOSED OF OFF THE PROJECT SITE ACCORDING TO APPLICABLE FEDERAL, STATE, AND LOCAL REGULATIONS.
6	2403-0100010	STRUCTURAL CONCRETE (RCB CULVERT) THE CONTRACTOR SHALL PROVIDE CERTIFIED PLANT INSPECTION FOR THE CONCRETE USED IN THE CONSTRUCTION OF THE CULVERT. THE COST OF THE INSPECTION SHALL BE INCIDENTAL TO THIS ITEM.
7	2404-7775005	REINFORCING STEEL, EPOXY COATED SEE "SUMMARY QUANTITIES" TABLES ON DESIGN SHEET 3.
8	2404-7775009	REINFORCING STEEL, STAINLESS STEEL SEE "SUMMARY QUANTITIES" TABLES ON DESIGN SHEET 3.
9	2414-6424124	CONCRETE OPEN RAILING, TL-4 CERTIFIED PLANT INSPECTION IS REQUIRED. THE COST OF THIS INSPECTION SHALL BE INCIDENTAL TO THIS ITEM. All STRUCTURAL CONCRETE FOR THE RAIL IS TO BE CLASS C; SUBSTITUTION OF CLASS D CONCRETE IS NOT ALLOWED.
10	2507-3250005	ENGINEERING FABRIC ENGINEERING FABRIC SHALL BE PLACED UNDERNEATH AND AT THE LIMITS OF CLASS E REVETMENT. SEE DESIGN SHEET 4 FOR DETAILS. INCLUDES 39.0 SY FOR ROADWAY. SEE TABULATION 100-23 ON SHEET C.5 FOR LOCATIONS. REFER TO STANDARD ROAD PLAN EC-301 FOR ADDITIONAL DETAILS.
11	2507-6800061	REVETMENT, CLASS E SEE DESIGN SHEET 4 FOR PLACEMENT DETAILS AND LIMITS.
12	2533-4980005	MOBILIZATION --

NOTE:
ROADWAY QUANTITIES SHOWN ELSEWHERE IN THESE PLANS.

DESIGN FOR 15° SKEW (L.A.)

TWIN 10' X 5' X 32'-0 REINFORCED CONCRETE BOX CULVERT

QUANTITIES & ERI NOTES

STA. 210+00.00 MAY, 2015

GUTHRIE COUNTY

IOWA DEPARTMENT OF TRANSPORTATION - HIGHWAY DIVISION

DESIGN SHEET NO. 1 OF 10 FILE NO. 31222 DESIGN NO. 315

GENERAL NOTES:

THIS DESIGN IS FOR THE CONSTRUCTION OF A TWIN 10'-0 X 5'-0 X 32'-0 REINFORCED CONCRETE BOX CULVERT, WITH A 15° LEFT AHEAD SKEW, AT STA. 210+00.00 ON LOCAL ROAD OVER SMALL CREEK IN SPRINGBROOK STATE PARK, GUTHRIE COUNTY.

THE RCB CULVERT SECTIONS ARE DESIGNED FOR HL-93 LIVE LOAD AND EARTH FILLS OF 0 FEET.

THE RCB CULVERT SECTIONS ARE DESIGNED FOR CLASS 1 EXPOSURE CONDITIONS EXCEPT: CLASS 2 EXPOSURE CONDITION IS UTILIZED FOR THE SLAB DESIGN IN 0' FILL INSTANCES.

FAINT LINES ON PLANS INDICATE THE EXISTING STRUCTURE.

UTILITY COMPANIES WHOSE FACILITIES ARE SHOWN ON THE PLANS OR KNOWN TO BE WITHIN THE CONSTRUCTION LIMITS SHALL BE NOTIFIED BY THE CONTRACTOR OF THE CONSTRUCTION STARTING DATE.

SOUNDING AND TEST BORING DATA SHOWN ON THE PLANS WERE ACCUMULATED FOR DESIGNING AND ESTIMATING PURPOSES. THEIR APPEARANCE ON THE PLANS DOES NOT CONSTITUTE A GUARANTEE THAT CONDITIONS OTHER THAN THOSE INDICATED WILL NOT BE ENCOUNTERED.

ALL REINFORCING BARS AND BARS NOTED AS DOWELS SUPPLIED FOR THIS STRUCTURE SHALL BE DEFORMED REINFORCEMENT UNLESS OTHERWISE NOTED OR SHOWN.

TWO 8" DIAMETER AND ONE 4" DIAMETER RF-1 PIPE (OR CMP) IS TO BE PROVIDED IN THE WALL (OR SLAB) AT THE LOCATION INDICATED. THE CONTRACTOR IS TO FURNISH A 4 FOOT SECTION OF PIPE. THE PIPE IS TO BE CONSIDERED INCIDENTAL TO THE UNIT PRICE BID FOR STRUCTURAL CONCRETE. THE LONGITUDINAL AND TRANSVERSE BARS, IN THE AREA OF THE OPENING, ARE TO BE FIELD CUT AND BENT TO PROVIDE FOR 2" MINIMUM CLEARANCE ALL AROUND THE OPENING.

WHEN DE-WATERING PRESENTS A PROBLEM FOR PLACING THE CURTAIN WALLS AS DETAILED, ALTERNATE METHODS SUCH AS STEEL SHEET PILE AND PRECAST CONCRETE WALLS MAY BE APPROVED BUT AT NO ADDITIONAL COST. THE CULVERT CONTRACTOR IS TO SUBMIT TO THE ENGINEER FOR APPROVAL COMPLETE DRAWINGS OF THE PROPOSED CURTAIN WALL ALTERNATE BEFORE BEGINNING CONSTRUCTION.

THE LISTED CULVERT STANDARDS REFERRED TO ON THE TITLE SHEET ARE TO USE THE GENERAL NOTES, DESIGN STRESSES, AND THE SPECIFICATIONS SHOWN ON THE TWRCB-G1-12 STANDARD.

REMOVALS SHALL BE IN ACCORDANCE WITH SECTION 2401, OF THE STANDARD SPECIFICATIONS.

THE TOP SLAB SURFACE WILL BE FINISHED IN ACCORDANCE WITH ARTICLE 2301.03 OF THE STANDARD SPECIFICATIONS. MACRO TEXTURE SHALL BE APPLIED LONGITUDINALLY (PARALLEL TO CENTERLINE OF THE ROADWAY). MACRO TEXTURE SHALL BE PLACED ON THE ENTIRE TOP SURFACE OF THE TOP SLAB EXCEPT IN THE AREA WITHIN APPROXIMATELY 2 FEET OF THE PARAPET.

IF NECESSARY TO PREVENT DAMAGE TO THE END OF THE CULVERT SLAB OR CULVERT WALLS FROM CONSTRUCTION EQUIPMENT, AN APPROPRIATE METHOD OF PROTECTION APPROVED BY THE ENGINEER SHALL BE PROVIDED BY THE CULVERT CONTRACTOR AT NO EXTRA COST TO THE STATE.

PAVING NOTCH DOWELS SHALL BE STAINLESS STEEL DEFORMED BAR GRADE 60, MEETING THE REQUIREMENTS OF MATERIALS I.M. 452.

SPECIFICATIONS FOR THIS PROJECT SHALL INCLUDE SPECIAL PROVISION SP-120302, STAINLESS STEEL BARS FOR CONCRETE REINFORCEMENT.

SCHEDULE OF OPERATION:

THE CONTRACTOR SHALL SUBMIT TO THE ENGINEER, PRIOR TO THE PRECONSTRUCTION CONFERENCE, A WRITTEN SCHEDULE FOR PERFORMANCE OF THE WORK ITEMS. THE SCHEDULE SHALL BE IN THE FORM OF A BAR GRAPH OR CHART SHOWING STARTING AND COMPLETION DATES FOR THE ITEMS. THE CONTRACTOR SHALL THEN MAKE EVERY EFFORT TO CONFORM TO THE ACCEPTED SCHEDULE.

NOTE:
POLLUTION PREVENTION PLAN SHOWN ELSEWHERE IN THESE PLANS.

TRAFFIC CONTROL PLAN
NOTE: THE ROADWAY WILL BE CLOSED TO THRU TRAFFIC. REFER TO THE TRAFFIC CONTROL PLAN SHOWN ELSEWHERE IN THESE PLANS.

DESIGN FOR 15° SKEW (L.A.)

TWIN 10' X 5' X 32'-0 REINFORCED CONCRETE BOX CULVERT

GENERAL NOTES

STA. 210+00.00 MAY, 2015

GUTHRIE COUNTY

IOWA DEPARTMENT OF TRANSPORTATION - HIGHWAY DIVISION

DESIGN SHEET NO. 2 OF 10 FILE NO. 31222 DESIGN NO. 315

SUMMARY OF CONCRETE QUANTITIES

LOCATION	STRUCTURAL CONCRETE	HPC STRUCTURAL CONCRETE
NORTH HEADWALL	26.4	--
BARREL SLAB	39.0	--
BARREL WALLS	12.2	--
EAST PAVING NOTCH	2.3	--
WEST PAVING NOTCH	2.3	--
BARREL FLOOR	26.6	--
SOUTH HEADWALL	26.4	--
SE & NE WINGS	3.4	--
SW & NE WINGS	3.4	--
TOTAL (CU. YDS.)	142.0	--

SUMMARY OF REINFORCING STEEL

LOCATION	NON-COATED REINFORCING STEEL	STAINLESS STEEL REINFORCING STEEL	EPOXY COATED REINFORCING STEEL
NORTH HEADWALL	--	--	3,452
EAST PAVING NOTCH	--	120	139
BARREL	--	--	9,670
WEST PAVING NOTCH	--	120	139
SOUTH HEADWALL	--	--	3,452
CONCRETE OPEN RAIL	--	1,270	1,441
CONCRETE WINGS	--	--	1,083
TOTAL (LBS.)	--	1,510	19,376

SUMMARY OF EXCAVATION

LOCATION	CLASS 20 EXCAVATION	CLASS 21 EXCAVATION
NORTH HEADWALL	89	--
BARREL	390	--
SOUTH HEADWALL	10	--
TOTAL (CU. YDS.)	489	--

DESIGN FOR 15° SKEW (L.A.)

TWIN 10' X 5' X 32'-0 REINFORCED CONCRETE BOX CULVERT

SUMMARY QUANTITIES

STA. 210+00.00 MAY, 2015

GUTHRIE COUNTY

IOWA DEPARTMENT OF TRANSPORTATION - HIGHWAY DIVISION

DESIGN SHEET NO. 3 OF 10 FILE NO. 31222 DESIGN NO. 315

BENCH MARK NO. 501 - SAW X ON PCC STRUCTURE AROUND MH, S. SIDE OF RESTROOMS, NE OF CAMPSITE AREA. EL. 1070.57

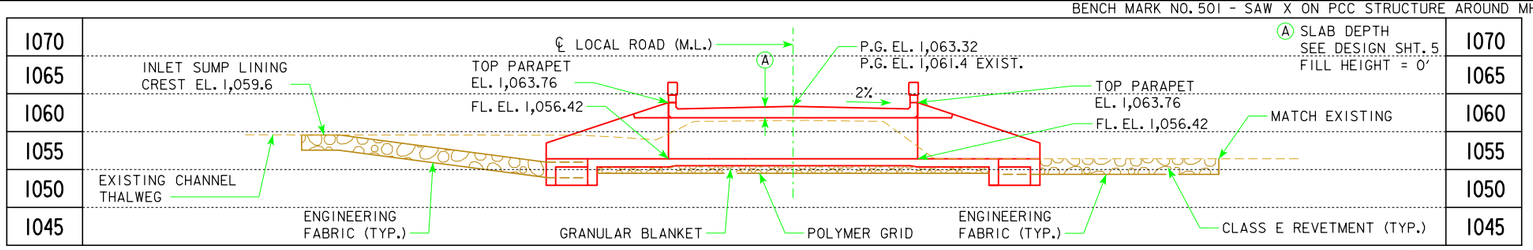

ANTICIPATED SETTLEMENT = LESS THAN ½"

LONGITUDINAL SECTION ALONG ℄ CULVERT

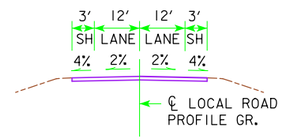

TYPICAL APPROACH SECTION

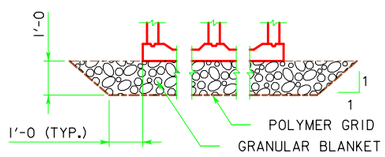

TYPICAL GRANULAR BLANKET DETAIL

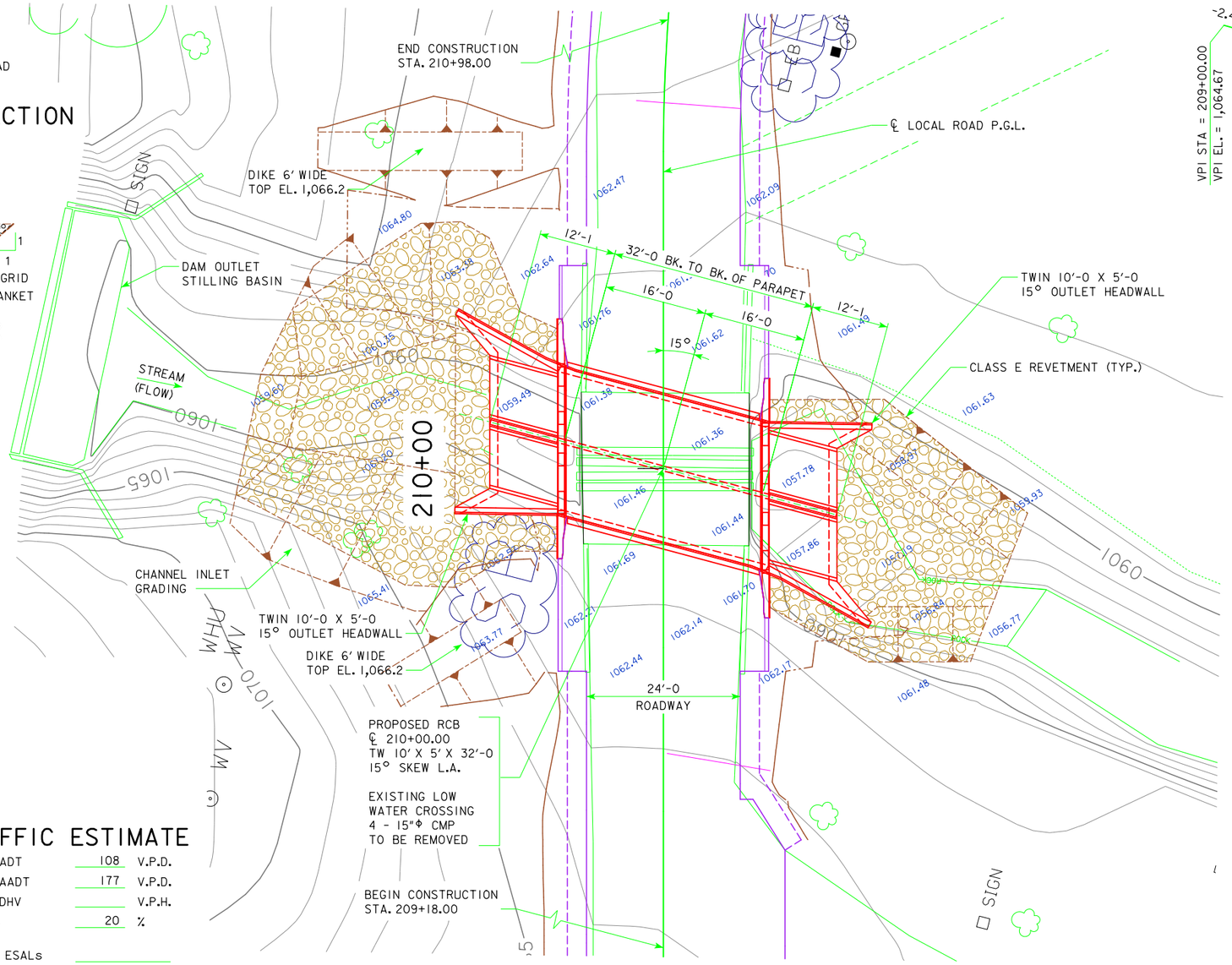

SITUATION PLAN

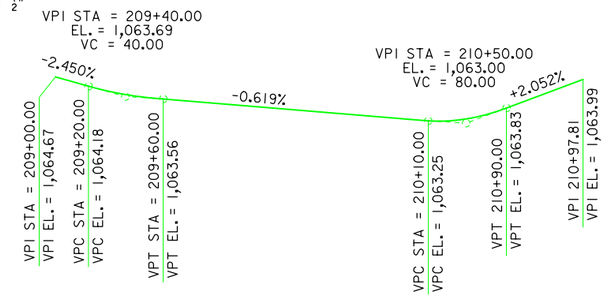

PROPOSED PROFILE GRADE LOCAL ROAD

HYDRAULIC DATA

DRAINAGE AREA = 2.6 SQ. MI.
STREAM SLOPE = 18.0 FT./MI.

Q_{10} = 770 CFS
STAGE = EL. 1,063.4
BACKWATER = (-)0.40 FT.
AVG. BRIDGE VELOCITY = 6.9 FPS

Q_{50} = 1,490 CFS
STAGE = EL. 1,064.7
BACKWATER = (-)0.10 FT.
AVG. BRIDGE VELOCITY = 5.8 FPS

Q_{100} = 1,780 CFS
STAGE = EL. 1,065.0
BACKWATER = 0.12 FT.

$Q_{OVERTOP}$ = 740 CFS (9 YR.)
ROADWAY OVERTOP EL. = 1,063.2

UTILITIES LEGEND:

(GII) WINDSTREAM COMMUNICATIONS
CONTACT NAME: JOEL SCHROEDER
CONTACT PHONE: 8002891901
CONTACT EMAIL: locate.desk@windstream.com

(GCT) GUTHRIE COUNTY RURAL ELECTRIC
CONTACT NAME: MARVIN LEMKE
CONTACT PHONE: 5157472206

(GTN) GUTHRIE TELECOMMUNICATIONS NET
CONTACT NAME: ANDREW M. RANDOL
CONTACT PHONE: 6413322000
CONTACT EMAIL: panora@netins.net

LOCATION

LOCAL ROAD OVER SMALL STREAM
SPRINGBROOK STATE PARK
T-80N R-31W
SECTION 4
VICTORY TOWNSHIP
GUTHRIE COUNTY
FHWA NO. 700780
BRIDGE MAINT. NO. NONE
LATITUDE 41.775031°
LONGITUDE -94.465233°

TRAFFIC ESTIMATE

2011 AADT	108	V.P.D.
2036 AADT	177	V.P.D.
2036 DHV		V.P.H.
TRUCKS	20	%
TOTAL DESIGN ESALs		

DESIGN FOR 15° SKEW (L.A.)

TWIN 10' X 5' X 32'-0 REINFORCED CONCRETE BOX CULVERT

SITUATION PLAN

STA. 210+00.00 MAY, 2015

GUTHRIE COUNTY

IOWA DEPARTMENT OF TRANSPORTATION - HIGHWAY DIVISION

DESIGN SHEET NO. 4 OF 10 FILE NO. 31222 DESIGN NO. 315

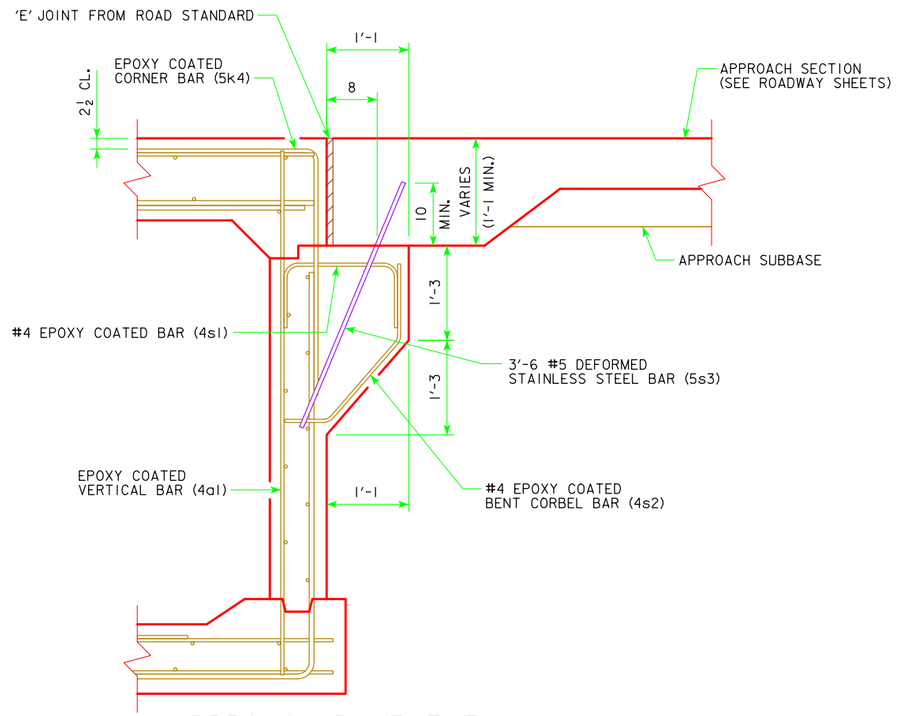

APPROACH PAVEMENT JOINT DETAIL

BILL OF EPOXY COATED REINFORCING STEEL - ONE PAVING NOTCH

BAR	LOCATION	SHAPE	NO.	LENGTH	WEIGHT
4s1	PAVING NOTCH		33	3'-4	73
4s2	PAVING NOTCH		33	3'-0	66
5s3	PAVING NOTCH*		33	3'-6	120
	* STAINLESS STEEL	TOTAL WEIGHT (LBS.)			259

BENT BAR DETAILS

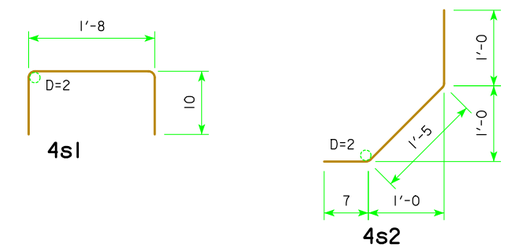

NOTE: ALL DIMENSIONS ARE OUT TO OUT.
D = PIN DIAMETER.

TOP OF SLAB ELEVATIONS

LOCATION	WEST EDGE		CL BOX		EAST EDGE
	LINE 1	LINE 2	LINE 3	LINE 4	LINE 5
NORTH GUTTER LINE	1063.06	1063.03	1062.99	1062.96	1062.92
CL	1063.39	1063.35	1063.32	1063.28	1063.25
SOUTH GUTTER LINE	1063.11	1063.08	1063.04	1063.01	1062.97

BOTT. SLAB EL. = 1,061.76

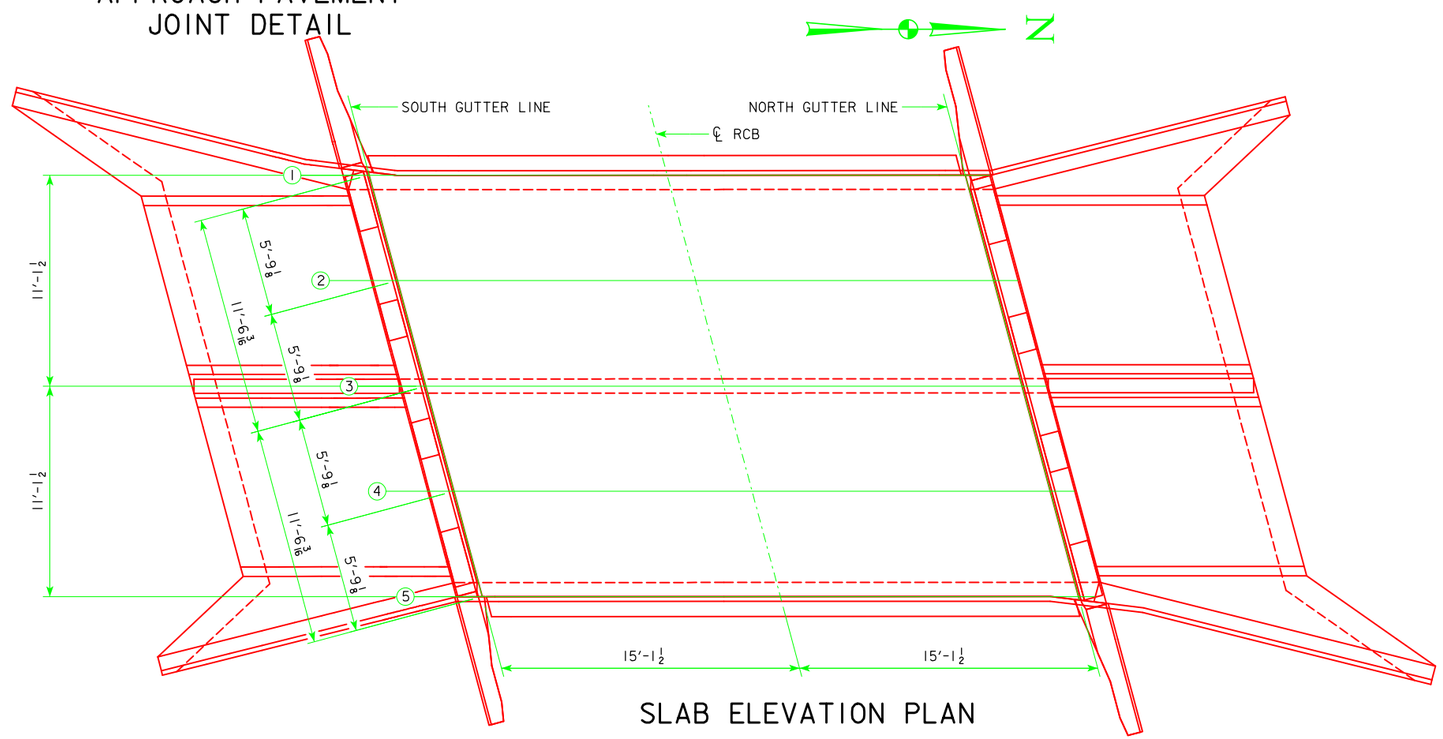

SLAB ELEVATION PLAN

DESIGN FOR 15° SKEW (L.A.)

TWIN 10' X 5' X 32'-0 REINFORCED CONCRETE BOX CULVERT

SLAB AND PAVING NOTCH DETAILS

STA. 210+00.00 MAY, 2015

GUTHRIE COUNTY

IOWA DEPARTMENT OF TRANSPORTATION - HIGHWAY DIVISION

DESIGN SHEET NO. 5 OF 10 FILE NO. 31222 DESIGN NO. 315

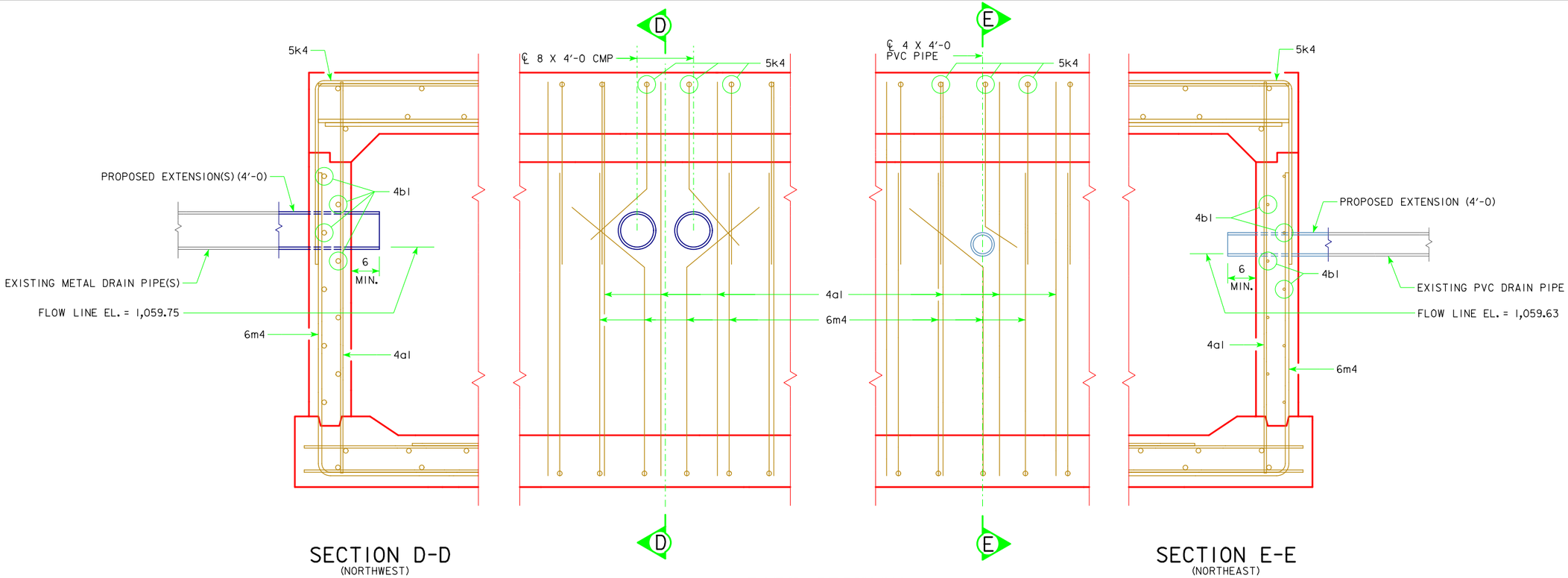

SECTION D-D
(NORTHWEST)

PART SECTION

SECTION E-E
(NORTHEAST)

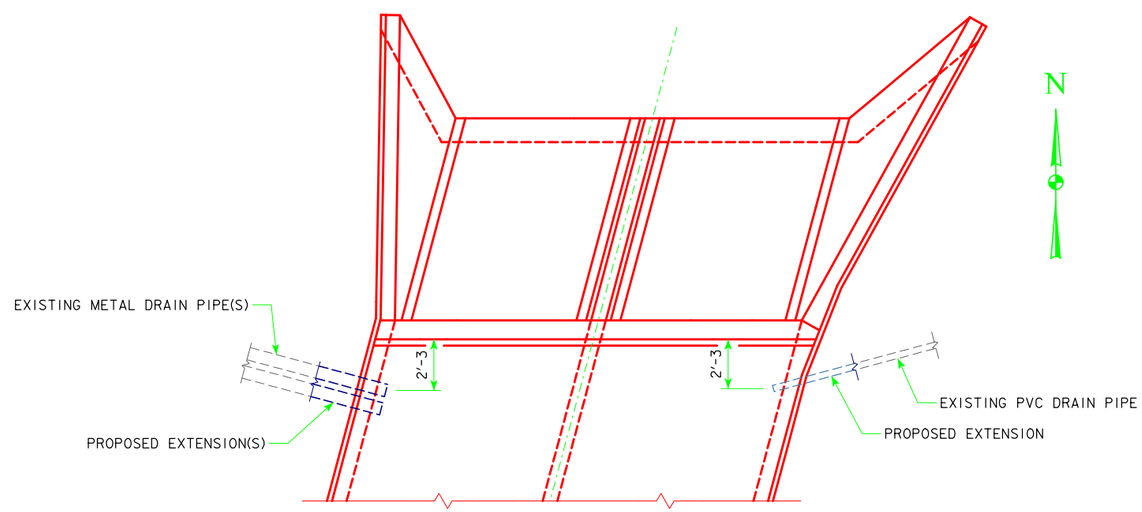

PART PLAN VIEW

NOTE:
THE PORTION OF THE PIPE THAT IS CAST INTO THE CULVERT WALL SHALL BE INCIDENTAL TO THE COST OF STRUCTURAL CONCRETE.

DESIGN FOR 15° SKEW (L.A.)

TWIN 10' X 5' X 32'-0 REINFORCED CONCRETE BOX CULVERT

PIPE CASTING DETAILS

STA. 210+00.00 MAY, 2015

GUTHRIE COUNTY

IOWA DEPARTMENT OF TRANSPORTATION - HIGHWAY DIVISION

DESIGN SHEET NO. 6 OF 10 FILE NO. 31222 DESIGN NO. 315

* NOTE: SEE DESIGN SHEET 9 FOR ROUNDED END SECTION DETAILS.

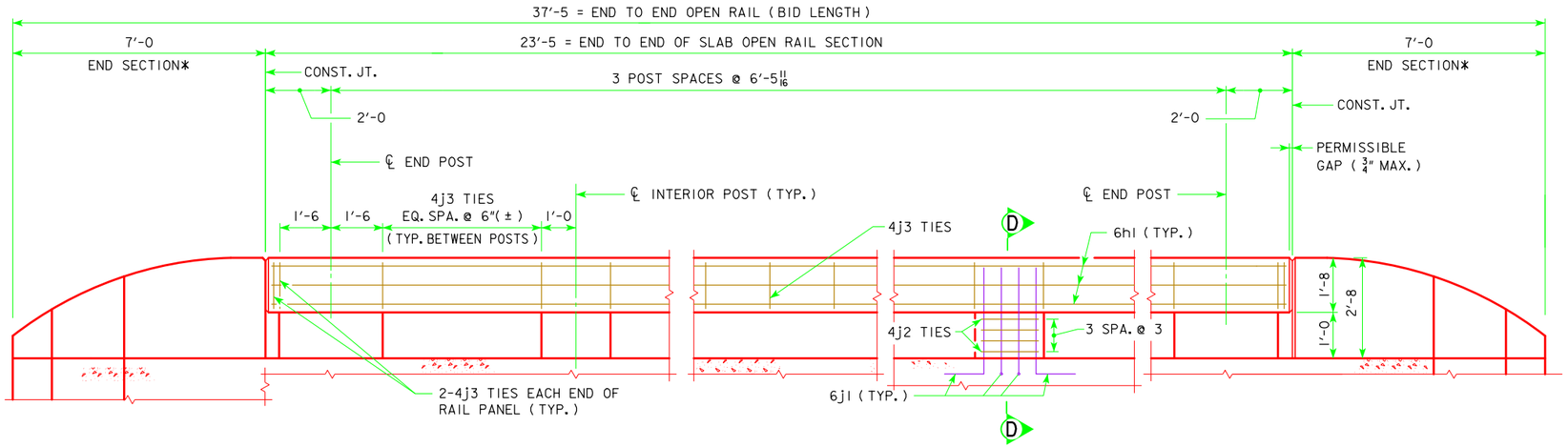

ELEVATION OF OPEN RAIL LAYOUT

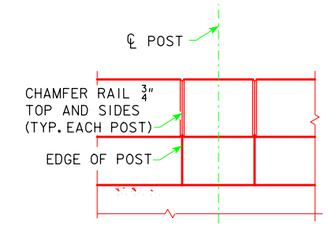

RAIL CHAMFER DETAIL

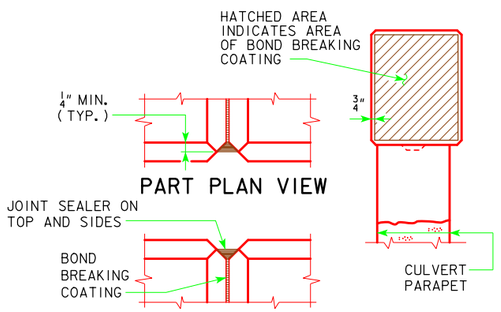

JOINT DETAILS AT END SECTION

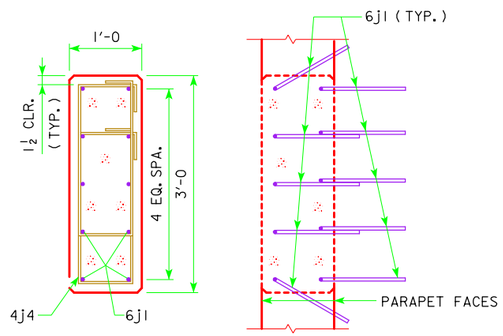

END POST DETAILS (REQUIRED AT ENDS OF OPEN RAIL)

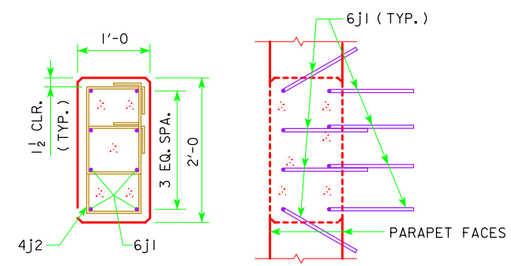

INTERIOR POST DETAILS

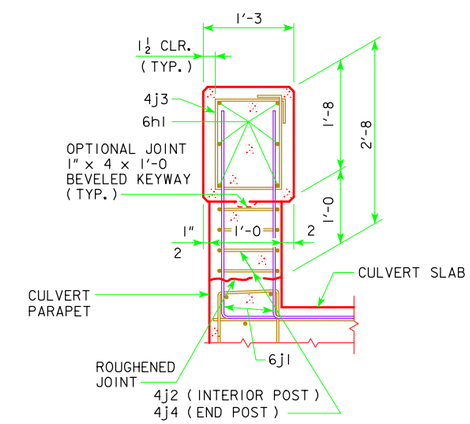

PART SECTION D-D

DESIGN FOR 15° SKEW (L.A.)

TWIN 10' X 5' X 32'-0 REINFORCED CONCRETE BOX CULVERT

RAILING DETAILS

STA. 210+00.00 MAY, 2015

GUTHRIE COUNTY

IOWA DEPARTMENT OF TRANSPORTATION - HIGHWAY DIVISION

DESIGN SHEET NO. 7 OF 10 FILE NO. 31222 DESIGN NO. 315

EPOXY REINFORCING STEEL-TWO OPEN RAILS

BAR	LOCATION	SHAPE	NO.	LENGTH	WEIGHT
4c4	VERTICAL HOOPS		20	2'-10	38
4c5	VERTICAL HOOPS		16	3'-1	33
6d1	HORIZONTAL		24	VARIES	192
6d2	HORIZONTAL		32	VARIES	272
6h1	LONGITUDINAL OPEN RAIL		12	23'-1	416
4j2	HOOPS INTERIOR POSTS		32	4'-8	100
4j3	HOOPS OPEN RAIL		64	5'-5	232
4j4	HOOPS END POSTS		32	6'-5	137
4t1	WING FOOTING TIE BARS		16	VARIES	21
	TOTAL WEIGHT FOR TWO OPEN RAILS (LBS.)				1,441

STAINLESS STEEL REINF. STEEL-TWO RAILS

BAR	LOCATION	SHAPE	NO.	LENGTH	WEIGHT
6c1	VERTICAL		96	4'-11	709
6c3	VERTICAL		16	3'-1	74
6j1	VERTICAL DOWELS OPEN RAIL		72	4'-6	487
(INCLUDE WITH SUPERSTRUCTURE REINFORCING)		TOTAL (LBS.)			1,270

BENT BAR DETAILS

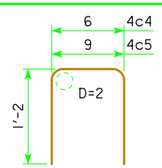

4c4 & 4c5

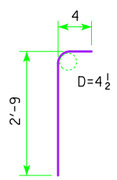

6c3

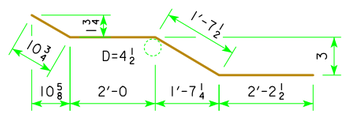

6d2

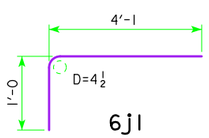

6j1

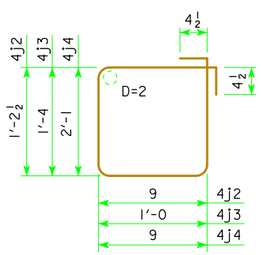

4j2, 4j3, 4j4

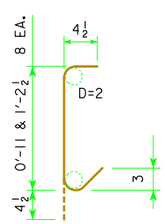

4t1

NOTE: ALL DIMENSIONS ARE OUT TO OUT.
D = PIN DIAMETER

CONCRETE PLACEMENT QUANTITIES

STANDARD SECTION CU. YDS.	4.3
END SECTION 4 @ 0.428 CU. YDS.	1.7
TOTAL CU. YDS.	6.0

CONCRETE OPEN RAIL QUANTITIES

	UNIT	
CONCRETE OPEN RAILING, TL-4	L.F.	74.8

OPEN RAIL NOTES:

MINIMUM CLEAR DISTANCE FROM FACE OF CONCRETE TO NEAR REINFORCING BAR IS TO BE 2" UNLESS OTHERWISE NOTED OR SHOWN.

COST OF THE JOINT SEALER AND BOND BREAKER SHALL BE CONSIDERED INCIDENTAL TO OTHER CONSTRUCTION.

THE CONCRETE OPEN RAIL IS TO BE BID ON A LINEAL FOOT BASIS MEASURED FROM END TO END OF RAIL. THE NUMBER OF LINEAL FEET OF OPEN RAIL INSTALLED WILL BE PAID FOR AT THE CONTRACT PRICE PER LINEAL FOOT. PRICE BID FOR "CONCRETE OPEN RAILING, TL-4" SHALL BE FULL COMPENSATION FOR FURNISHING ALL MATERIAL, EXCLUDING REINFORCING STEEL, AND ALL OF THE EQUIPMENT AND LABOR REQUIRED TO CONSTRUCT THE RAIL IN ACCORDANCE WITH THESE PLANS AND CURRENT SPECIFICATIONS.

ALL OPEN RAIL REINFORCING STEEL IS TO BE INCLUDED WITH THE SUPERSTRUCTURE REINFORCING STEEL.

ALL OPEN RAIL CONCRETE IS TO BE CLASS C.

THE JOINT SEALER SHALL BE LIGHT GRAY NONSAG LATEX CAULKING SEALER MARKETED FOR OUTDOOR USE. NO TESTING OR CERTIFICATION IS REQUIRED.

TOP OF THE OPEN RAIL IS TO BE PARALLEL TO THEORETICAL ℄ GRADE.

DESIGN FOR 15° SKEW (L.A.)

TWIN 10' X 5' X 32'-0 REINFORCED CONCRETE BOX CULVERT

RAILING DETAILS

STA. 210+00.00 MAY, 2015

GUTHRIE COUNTY

IOWA DEPARTMENT OF TRANSPORTATION - HIGHWAY DIVISION

DESIGN SHEET NO. 8 OF 10 FILE NO. 31222 DESIGN NO. 315

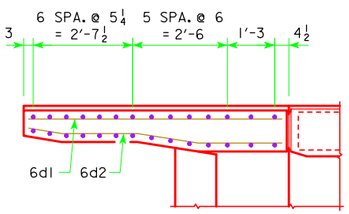

PART PLAN SECTION

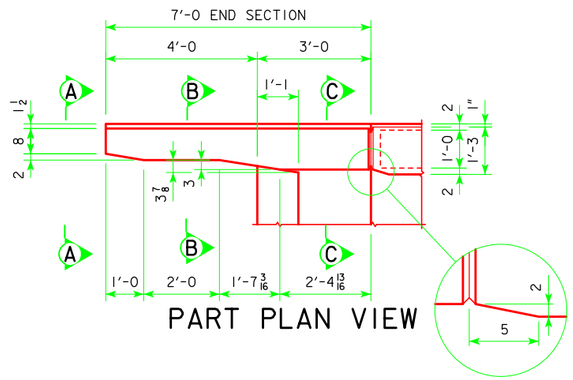

PART PLAN VIEW

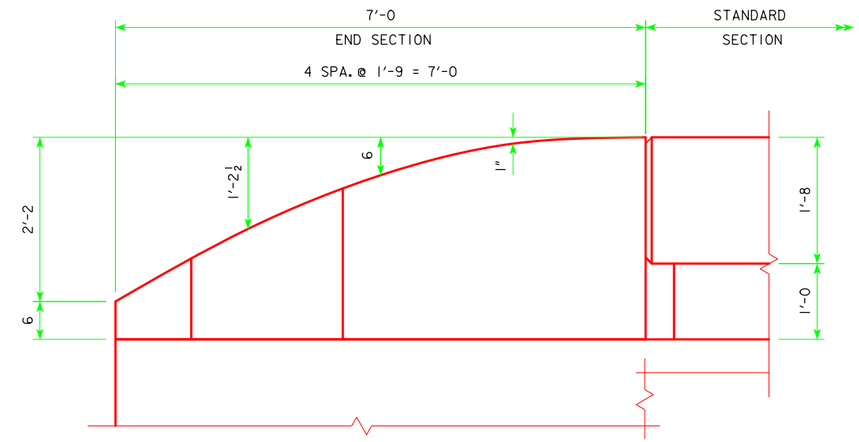

PART ELEVATION

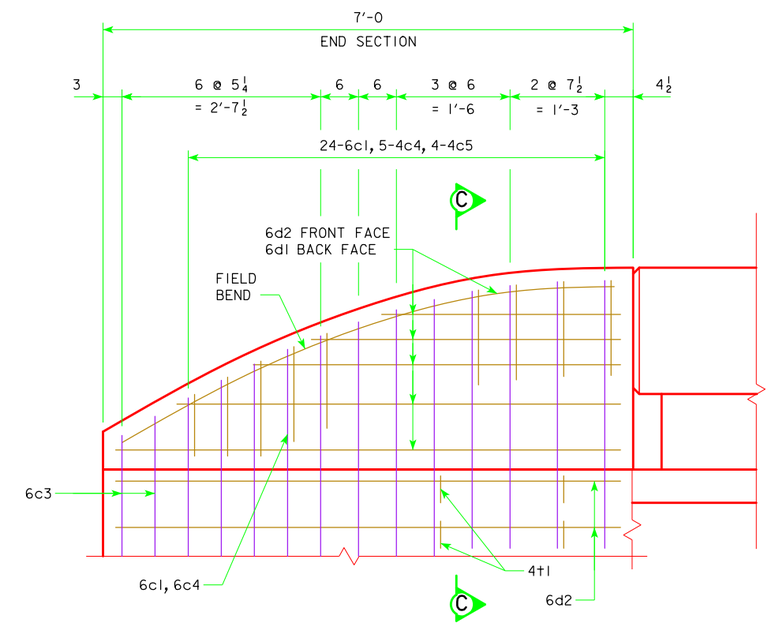

ROUNDED END SECTION
PART ELEVATION VIEW

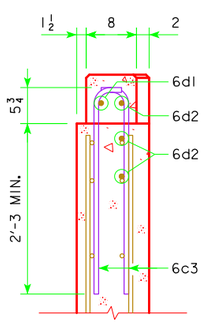

VIEW A-A

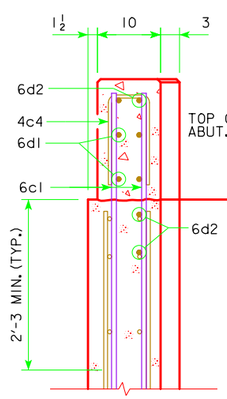

SECTION B-B

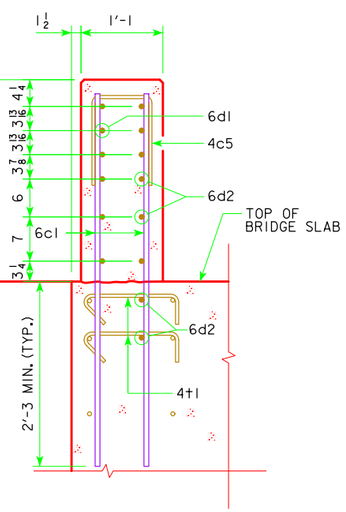

SECTION C-C

DESIGN FOR 15° SKEW (L.A.)

TWIN 10' X 5' X 32'-0 REINFORCED CONCRETE BOX CULVERT

RAILING DETAILS

STA. 210+00.00 MAY, 2015

GUTHRIE COUNTY

IOWA DEPARTMENT OF TRANSPORTATION - HIGHWAY DIVISION

DESIGN SHEET NO. 9 OF 10 FILE NO. 31222 DESIGN NO. 315

EPOXY REINFORCING STEEL-FOUR WINGS

BAR	LOCATION	SHAPE	NO.	LENGTH	WEIGHT
5h2	WING HORIZ. B.F.		32	6'-8	223
5h3	WING ANCHOR		64	3'-9	250
5h4	WING HORIZ. TRAFFIC FACE (SE & NW WINGS)		16	6'-6	108
5h5	WING HORIZ. TRAFFIC FACE (SW & NE WINGS)		16	7'-1	118
5s1	WING VERT.		64	5'-9	384
	TOTAL WEIGHT FOR FOUR WINGS (LBS.)				1,083

BENT BAR DETAILS

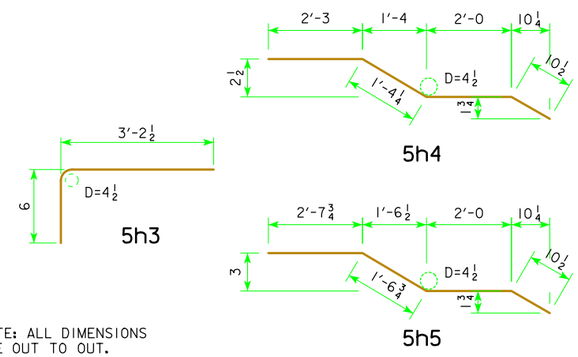

NOTE: ALL DIMENSIONS ARE OUT TO OUT.
D = PIN DIAMETER

CONCRETE PLACEMENT QUANTITIES

SE & NW WINGS 2 @ 1.722 CU. YDS.	3.4
SW & NE WINGS 2 @ 1.829 CU. YDS.	3.7
TOTAL CU. YDS.	7.1

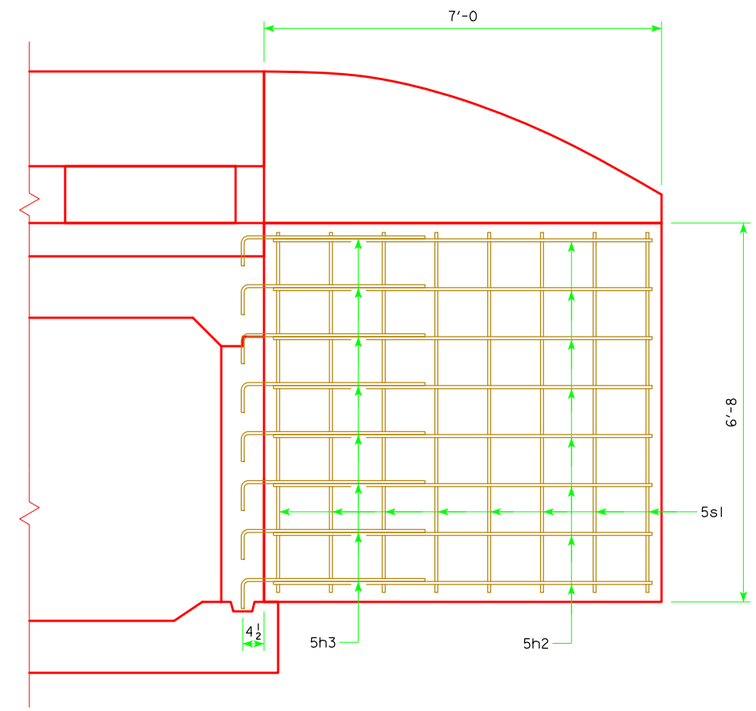

RAIL END SECTION

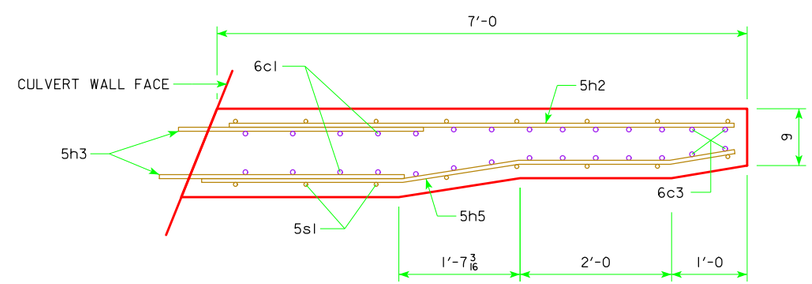

SE AND NW WINGS

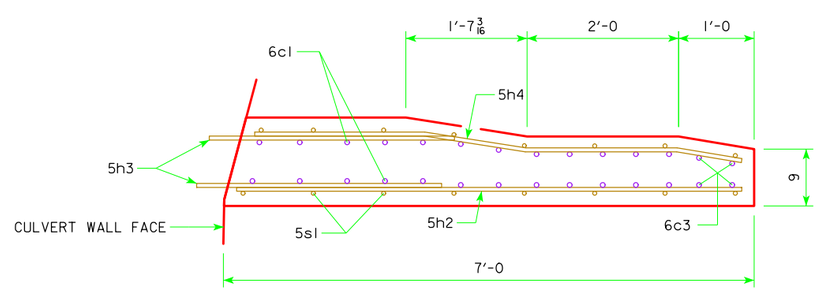

SW AND NE WINGS

DESIGN FOR 15° SKEW (L.A.)

TWIN 10' X 5' X 32'-0 REINFORCED CONCRETE BOX CULVERT

WING DETAILS

STA. 210+00.00 MAY, 2015

GUTHRIE COUNTY

IOWA DEPARTMENT OF TRANSPORTATION - HIGHWAY DIVISION

DESIGN SHEET NO. 10 OF 10 FILE NO. 31222 DESIGN NO. 315

$-H_2O-$ WATER	SOILS BOOK NO. _ _ _ _ _ _ _		
(S) SAMPLE	SHELBY	DENS. CORE	
PLUGGED	BLOW*	SELECT SAND	
M MOISTURE	UNSUITABLE	SANDY SOIL	
SHALE	ROCK	SELECT SOIL	

*140-lb CME Automatic SPT Hammer

0 FEET 20

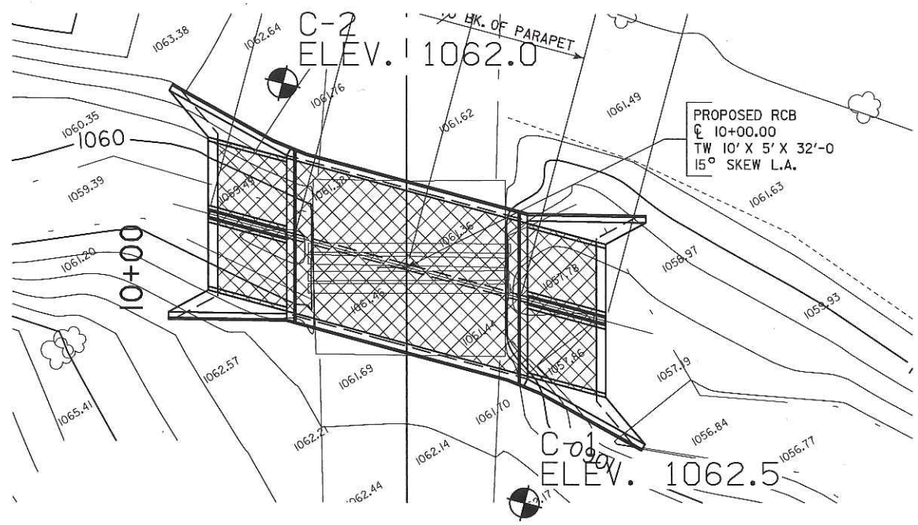

THIS SHEET IS INCLUDED TO SHOW SOIL INFORMATION. DETAILS AND NOTES SHOWN ELSEWHERE IN THESE PLANS SHALL BE USED FOR STRUCTURE CONSTRUCTION.

NOTE: SOILS MAY VARY BETWEEN BORINGS. SEE STANDARD SPECIFICATION 1104.01

-INDICATES LAYER THICKNESS (ft.)

BLOW COUNT
LAYER - N=BLOWS

A1 N=5

LICENSED PROFESSIONAL ENGINEER THERESA STROMBERG-MURPHY 16934 IOWA

I hereby certify that this engineering document was prepared by me or under my direct personal supervision and that I am a duly licensed Professional Engineer under the laws of the State of Iowa.

Signature: Theresa Stromberg-Murphy Date: 5/6/15
THERESA STROMBERG-MURPHY
Printed or Typed Name

My license reneval date is December 31, 2015

Pages or sheets covered by this seal: SPS.1

TWIN 10'-0 X 5'-0 X 32'-0 REINFORCED CONCRETE BOX CULVERT

SOILS PROFILE SHEET

STA. 10+00 MAY, 2015

GUTHRIE COUNTY

IOWA DEPARTMENT OF TRANSPORTATION - HIGHWAY DIVISION

DESIGN SHEET NO. 1 OF 1 FILE NO. 31222 DESIGN NO. 315

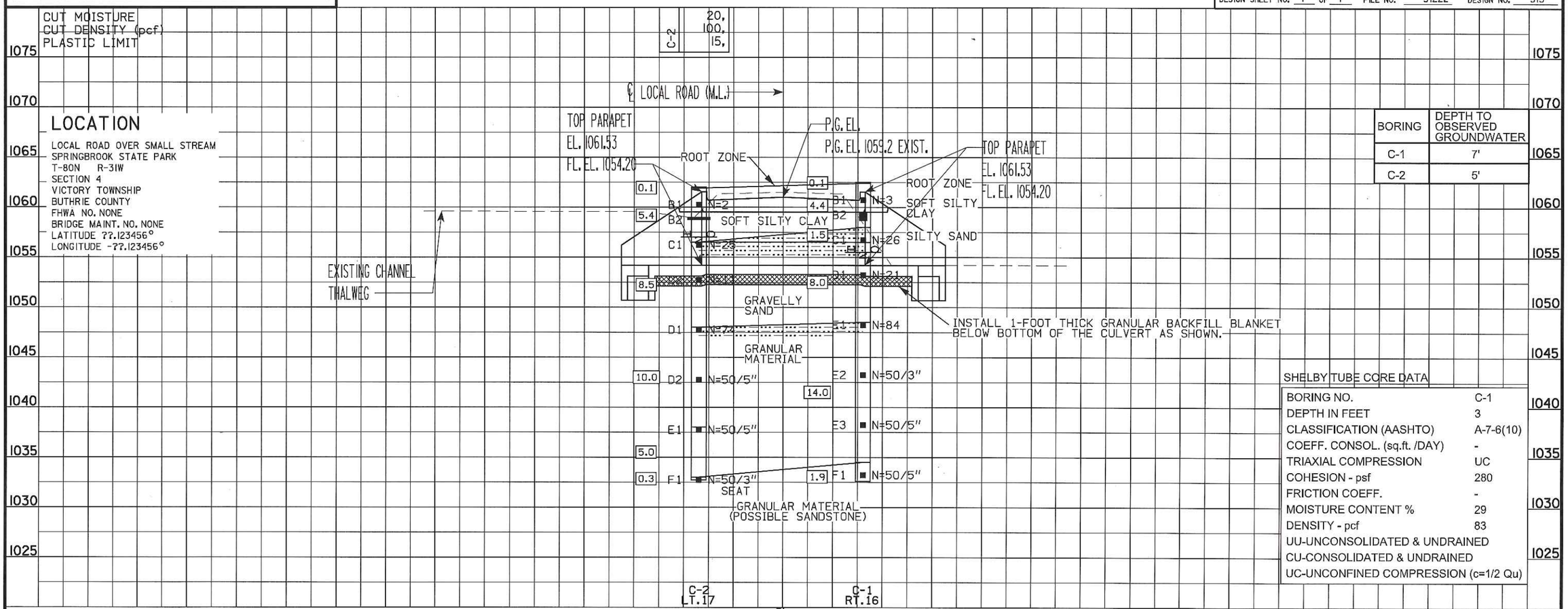

BORING	DEPTH TO OBSERVED GROUNDWATER
C-1	7'
C-2	5'

SHELBY TUBE CORE DATA

BORING NO.	C-1
DEPTH IN FEET	3
CLASSIFICATION (AASHTO)	A-7-6(10)
COEFF. CONSOL. (sq.ft. /DAY)	-
TRIAXIAL COMPRESSION	UC
COHESION - psf	280
FRICTION COEFF.	-
MOISTURE CONTENT %	29
DENSITY - pcf	83

UU-UNCONSOLIDATED & UNDRAINED
CU-CONSOLIDATED & UNDRAINED
UC-UNCONFINED COMPRESSION (c=1/2 Qu)

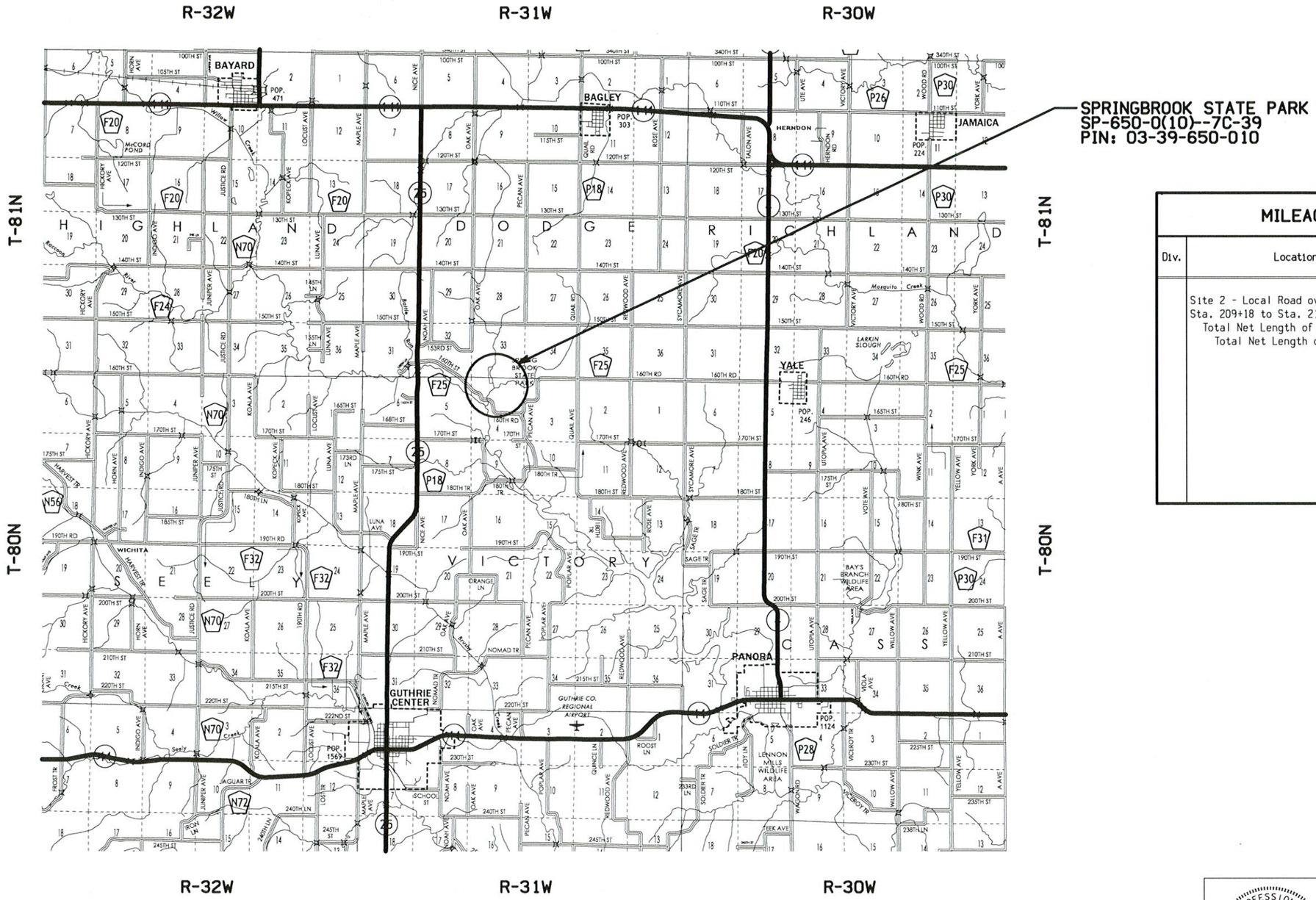

MILEAGE SUMMARY			105-1 09-27-94
Div.	Location	Lin. Ft.	Miles
	Site 2 - Local Road over Small Stream		
	Sta. 209+18 to Sta. 210+98	180	
	Total Net Length of Roadway	180	0.034
	Total Net Length of Project	180	0.034

LICENSED PROFESSIONAL ENGINEER
BRIAN T. HIGGINBOTHAM
14503
IOWA

I hereby certify that this engineering document was prepared by me or under my direct personal supervision and that I am a duly licensed Professional Engineer under the laws of the

Signature 4/28/15 Date
Brian T. Higginbotham, P.E.
Printed or Typed Name

My license renewal date is December 31, 20 15

Pages or sheets covered by this seal: A.1, B.1-B.2, C.1-C.7, D.1-D.2, G.1-G.2, J.1, L.1, T.1, U.1 and W.1-W.5

LOCATION MAP SCALE
0 1 2 3
Miles

FILE NO. 31222	ENGLISH	DESIGN TEAM hgm	GUTHRIE COUNTY	PROJECT NUMBER SP-650-0(10)--7C-39	SHEET NUMBER A.1

8:20:40 AM 4/6/2015 BTH W:\Projects\3965001012\Design\3965010a01.sht

LOCATION			DIMENSIONS			
ROAD IDENTIFICATION	STATION TO STATION		(L) Feet	(R) Feet	(X) Inches	FS
SITE 2 - LOCAL ROAD	209+18	209+40.4	16	19	13	3
SITE 2 - LOCAL ROAD	209+40.4	209+48.3	16	19-18	VAR	3
SITE 2 - LOCAL ROAD	209+48.3	209+68.3	16	16	VAR	3
SITE 2 - LOCAL ROAD	209+68.3	209+83.8	---	17.8	VAR	3
SITE 2 - LOCAL ROAD	209+68.3	209+92.6	17.8	---	VAR	3
SITE 2 - LOCAL ROAD	RCB					
SITE 2 - LOCAL ROAD	210+07.5	210+31.7	---	17.8	VAR	3
SITE 2 - LOCAL ROAD	210+16.1	210+31.7	17.6	---	VAR	3
SITE 2 - LOCAL ROAD	210+31.7	210+81.7	16	16	VAR	3
SITE 2 - LOCAL ROAD	210+81.7	210+98	16	18-20.4	13	3

G_2_Grade
MODIFIED

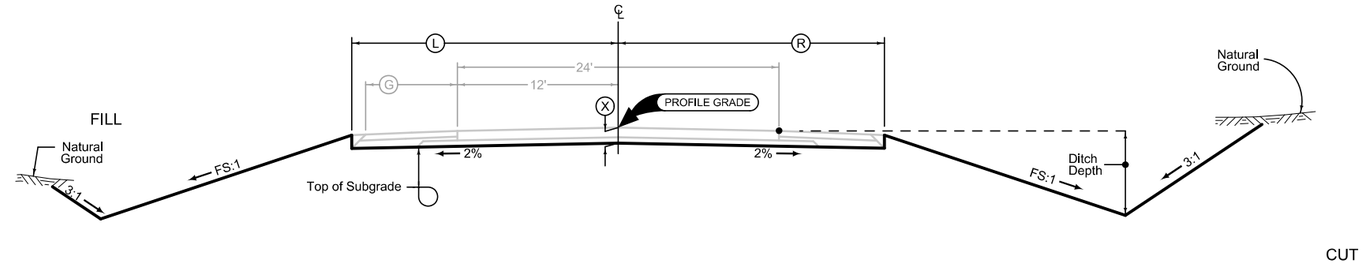

Normal section shown may be modified appropriately in areas of superelevated curves or other locations specifically designated by the Engineer.

See plan & profile sheets and cross sections for additional details of ditches and backslopes.

2 LANE GRADING

Granular Shoulder

2_G_ 10-21-14		
STATION TO STATION		(G) Feet
SITE 2		
209+18	209+68.3	3
210+31.7	210+98	3

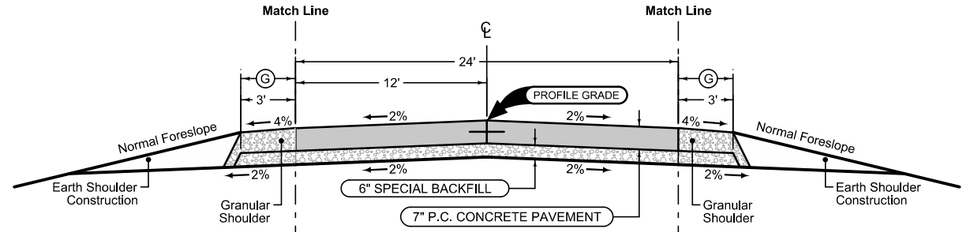

Mainline Jointing:
Transverse joints: CD at 20' spacing
Longitudinal joint: L-2

2P_ 10-19-10		
STATION TO STATION		
SITE 2		
209+18	209+88.3	BR-103
		RCB
210+11.7	210+81.7	BR-103
210+81.7	210+98	

Granular Shoulder

2_G_ 10-21-14		
STATION TO STATION		(G) Feet
SITE 2		
209+41.9	209+68.3	3
210+31.7	210+98.0	3

See Tab 100-24 or 100-25 for pavement quantities.

See Tab 112-9 for shoulder quantities.

SITE 2 - LOCAL ROAD OVER SMALL STEAM (RCB)

100-0A
10-28-97

ESTIMATED ROADWAY QUANTITIES
(1 DIVISION PROJECT)

Item No.	Item Code	Item	Unit	Total	As Built Qty.
1	2101-0850002	CLEARING AND GRUBBING	UNIT	4.1	
2	2102-0425070	SPECIAL BACKFILL	TON	26	
3	2102-2710070	EXCAVATION, CLASS 10, ROADWAY AND BORROW	CY	277	
4	2102-2712015	CLASS 10, BOULDERS OR ROCK FRAGMENTS	CY	15	
5	2105-8425015	TOPSOIL, STRIP, SALVAGE AND SPREAD	CY	102	
6	2121-7425010	GRANULAR SHOULDERS, TYPE A	TON	26	
7	2123-7450000	SHOULDER CONSTRUCTION, EARTH	STA	2.9	
8	2301-0690210	BRIDGE APPROACH, TWO LANE	SY	405.8	
9	2301-1032070	STANDARD OR SLIP FORM PORTLAND CEMENT CONCRETE PAVEMENT, CLASS C,	SY	71.4	
		CLASS 2, DURABILITY, 7 IN.			
10	2507-8029000	EROSION STONE	TON	25	
11	2510-6745850	REMOVAL OF PAVEMENT	SY	424.6	
12	2518-6910000	SAFETY CLOSURE	EACH	3	
13	2520-3350010	FIELD LABORATORY	EACH	1	
14	2524-6765010	REMOVE AND REINSTALL SIGN, AS PER PLAN	EACH	1	
15	2524-9100030	OBJECT MARKER, TYPE 3	EACH	4	
16	2626-8285000	CONSTRUCTION SURVEY	LS	1	
17	2528-8445110	TRAFFIC CONTROL	LS	1	
18	2602-0000020	SILT FENCE	LF	260	
19	2602-0000030	SILT FENCE FOR DITCH CHECK	LF	180	
20	2602-0000071	REMOVAL OF SILT FENCE OR SILT FENCE FOR DITCH CHECKS	LF	440	
21	2602-0000101	MAINTENANCE OF SILT FENCE OR SILT FENCE FOR DITCH CHECKS	LF	45	
22	2602-0000212	FLOATING SILT CURTAIN (HANGING)	LF	200	
23	2602-0000240	MAINTENANCE OF FLOATING SILT CURTAIN	LF	100	
24	2602-0000312	PERIMETER AND SLOPE SEDIMENT CONTROL DEVICE, 12 IN. DIA.	LF	410	
25	2602-0000320	PERIMETER AND SLOPE SEDIMENT CONTROL DEVICE, 20 IN. DIA.	LF	200	
26	2602-0000350	REMOVAL OF PERIMETER AND SLOPE SEDIMENT CONTROL DEVICE	LF	610	
27	2602-0010010	MOBILIZATIONS, EROSION CONTROL	EACH	1	
28	2602-0010020	MOBILIZATIONS, EMERGENCY EROSION CONTROL	EACH	1	

100-1D
10-18-05

PROJECT DESCRIPTION

This project involves the removal of a concrete low water crossing and replacing it with a twin 10' X 5' RCB. A profile correction will be made, and associated bridge approach sections will be installed. In order to accommodate the new profile, new portland cement concrete pavement sections will be included at each end of the bridge approach sections.

This project (Site 2) will be tied to two separate projects within Springbrook Park. The work is to be started after Labor Day and completed prior to Memorial Day.

100-4A
10-29-02

ESTIMATE REFERENCE INFORMATION

Item No.	Item Code	Description
1	2101-0850002	**CLEARING AND GRUBBING**
		REFER TO TAB 110-17 ON SHEET C.5 FOR LOCATIONS.
		REFER TO GENERAL NOTES 232-10 AND 232-6 ON SHEET C.3 FOR ADDITIONAL INFORMATION.
2	2102-0425070	**SPECIAL BACKFILL**
		REFER TO TAB 100-24 ON SHEET C.6.
		DESIGN RATE: 140 PCF
3	2102-2710070	**EXCAVATION, CLASS 10, ROADWAY AND BORROW**
		REFER TO SHEET T.1 AND CROSS-SECTIONS ON SHEETS W.1 - W.5 FOR LOCATIONS.
		REFER TO TAB. 103-7 ON SHEET C.5
		REFER TO TYPICAL G_2_GRADE MODIFIED ON SHEET B.1 FOR DETAILS OF CONSTRUCTION.
		REFER TO TAB 107-22 ON SHEET C.7 FOR EARTHWORK RELATED TO WING DIKES.
		THERE IS A TOTAL OF 277 CY OF CLASS 10 CUT FROM ROADWAY GRADING.
		THERE IS 84 CY OF ADJUSTED FILL MATERIAL NEEDED FOR ROADWAY CONSTRUCTION.
		THERE IS AN ADDITIONAL 43 CY OF ADJUSTED FILL NEED FOR CONSTRUCTION OF THE TWO WING DIKES.
		A 1.30 % ADJUSTMENT HAS BEEN APPLIED TO FILL MATERIAL FOR THE ROADWAY AND FOR THE WING DIKES.
		THE PROJECT INCLUDES 277 CY OF CUT AND A COMBINED TOTAL OF 127 CY OF ADJUSTED FILL, RESULTING IN APPROXIMATELY
		150 CY OF WASTE TO BE DISPOSED OF BY THE CONTRACTOR.
4	2102-2712015	**CLASS 10, BOULDERS OR ROCK FRAGMENTS**
		REFER TO TAB 103-7 ON SHEET C.5
		QUANTITY IS ESTIMATED FOR REMOVAL OF LARGE ROCK BELOW SURFACE, IN CREEK AND ON BANKS.
		CONTRACTOR SHALL FORM STOCKPILE OF ALL ROCK AND BOULDERS PRIOR TO REMOVAL FROM SITE FOR MEASUREMENT
		BY THE ENGINEER.
5	2105-8425015	**TOPSOIL, STRIP, SALVAGE AND SPREAD**
		REFER TO TAB 103-4 AND 103-7 ON SHEET C.5 FOR LOCATIONS AND DETAILS.
		CONTRACTOR SHALL STRIP 9-INCHES OF TOPSOIL WITHIN CONSTRUCTION LIMITS. STRIPPED TOPSOIL SHALL BE REPLACED
		AT APPROXIMATE 6-INCH DEPTH, ALLOWING FOR SHRINKAGE.
6	2121-7425010	**GRANULAR SHOULDERS, TYPE A**
7	2123-7450000	**SHOULDER CONSTRUCTION, EARTH**
		REFER TO TAB 112-9 ON SHEET C.7 FOR LOCATIONS.
		REFER TO TYPICAL 2_G ON SHEET B.2 FOR ADDITONAL INFORMATION.
		2 TONS OF MATERIAL HAS BEEN ADDED FOR DRESSING AT STA. 210+45 RT.
8	2301-0690210	**BRIDGE APPROACH, TWO LANE**
		REFER TO TAB 112-6 ON SHEET C.6 FOR LOCATIONS.
		REFER TO STANDARD ROAD PLANS BR-101, BR-103 AND DR-304 FOR DETAILS OF CONSTRUCTION.
		REFER TO PV-101 AND PV-102 FOR ADDITONAL DETAILS.
		CONTRACTOR SHALL PROVIDE 201 LF OF SUBDRAIN, 2 DR-304 SUBDRAIN OUTLETS, 15 CY OF POROUS BACKFILL, 1 CY OF
		CLASS A CRUSHED STONE, 438 TONS OF MODIFIED SUBBASE AND 478 SY OF POLYMER GRID, INCIDENTAL TO THE ITEM OF
		BRIDGE APPROACH, TWO LANE.
9	2301-1032070	**STANDARD OR SLIP FORM PORTLAND CEMENT CONCRETE PAVEMENT, CLASS C,**
		CLASS 2, DURABILITY, 7 IN.
		REFER TO TAB 100-24 ON SHEET C.6.
		REFER TO TYPICAL 2_P ON SHEET B.2 FOR DETAILS OF CONSTRUCTION.
		REFER TO STANDARD ROAD PLAN PV-101 FOR ADDITIONAL DETAILS.
		REFER TO GENERAL NOTE 290-2 ON SHEET C.3.
		REFER TO TAB 100-27 ON SHEET C.7; SMOOTHNESS IS WAIVED.
		CARE SHALL BE TAKEN TO PROTECT EXISTING PAVEMENT EDGES AT SAWCUTS TO PROVIDE CLEAN EDGES AT TIE-INS.
		PCC PAVEMENT THICKNESS WILL NOT BE EVALUATED.
10	2507-8029000	**EROSION STONE**
		REFER TO TAB 100-23 ON SHEET C.5 FOR LOCATIONS.
		REFER TO STARDARD ROAD PLAN EC-301 FOR ADDITIONAL DETAILS OF CONTSTRUCTION.
		REFER TO BRIDGE SHEETS FOR PAY ITEM "ENGINERING FABRIC"
11	2510-6745850	**REMOVAL OF PAVEMENT**
		REFER TO TAB 110-1 ON SHEET C.7.
		INCLUDES 81 LF OF SAWCUT INCIDENTAL TO THE ITEM OF REMOVAL OF PAVEMENT.
		CARE SHALL BE TAKEN TO PROTECT EXISTING PAVEMENT EDGES AT SAWCUTS TO PROVIDE CLEAN EDGES AT TIE-INS.
		THE EXISTING LOW WATER CROSSING STRUCTURE REMOVAL IS TO BE PAID FOR AS REMOVAL OF STRUCTURES, AS NOTED IN THE
		STRUCTURAL SHEETS.
12	2518-6910000	**SAFETY CLOSURE**
		REFER TO TAB 108-13A ON SHEET C.5.
		ONE SAFETY CLOSURE ASSOCIATED WITH STANDARD ROAD PLAN TC-252.
		TWO SAFETY CLOSURES TO BE PLACED AS HAZARD CLOSURES TO PROTECT WORK ZONE.
13	2520-3350010	**FIELD LABORATORY**
14	2524-6765010	**REMOVE AND REINSTALL SIGN, AS PER PLAN**
		THE EXISTING "SITE 59" SIGN AT STA. 210+87 LT SHALL BE REMOVED PRIOR TO CONSTRUCTION AND STORED IN A SAFE
		LOCATION. THE SIGNS SHALL BE REINSTALLED AT THE SAME LOCATION AT THE COMPLETION OF CONSTRUCTION.
		MEASUREMENT FOR REMOVAL AND REINSTALLATION OF SIGNS WILL BE FOR EACH SIGN SATISFACTORILY REMOVED AND
		REINSTALLED. BASIS OF PAYMENT FOR REMOVAL AND REINSTALLATION OF EACH SIGN, INCLUDING REMOVAL, STORAGE, AND
		REINSTALLATION, INCLUDING LABOR, TOOLS, EQUIPMENT AND ANY HARDWARE. IF SIGNS OR POSTS ARE DAMAGED OR BROKEN
		DURING REMOVAL, STORAGE OR REINSTALLATION, THEY SHALL BE REPLACED WITH EQUIVALENT MATERIALS AT NO
		ADDITIONAL COST TO THE OWNER.

ESTIMATE REFERENCE INFORMATION

Item No.	Item Code	Description
15	2524-9100030	**OBJECT MARKER, TYPE 3**
		REFER TO TAB 108-8A ON SHEET C.7 FOR LOCATIONS.
		REFER TO STANDARD ROAD PLANS SI-173 AND SI-211 FOR DETAILS OF CONSTRUCTION.
		OBJECT MARKERS TO BE PLACED WITHOUT GUARDRAIL.
		MEASUREMENT FOR SATISFACTORILY ERECTING THE OBJECT MARKERS ACCORDING TO THE CONTRACT DOCUMENTS WILL BE FOR
		EACH OBJECT MARKER INSTALLED.
		PAYMENT FOR SATISFACTORILY ERECTING EACH OBJECT MARKER ACCORDING TO THE CONTRACT DOCUMENTS IS FULL
		COMPENSATION FOR FURNISHING, FABRICATING, AND ERECTING THE OBJECT MARKERS, INCLUDING THE POSTS, AND
		FURNISHING ALL NECESSARY FITTINGS AND ATTACHMENTS AND ALL LABOR NECESSARY TO COMPLETE THE WORK.
16	2626-8285000	**CONSTRUCTION SURVEY**
17	2528-8445110	**TRAFFIC CONTROL**
18	2602-0000020	**SILT FENCE**
		REFER TO TAB 100-17 ON SHEET C.5. THE TABULATION INCLUDES ESTIMATED LOCATIONS FOR PLACEMTNE OF SILT FENCE
		TO ADDRESS POSSIBLE EROSION DURING CONSTRUCTION. VERIFY THE SPECIFIC LOCATIONS WITH THE ENGINEER PRIOR TO
		BEGINNING PLACEMENT. BID ITEM INCLUDES 25% ADDITIONAL QUANTITY FOR FIELD ADJUSTMENTS AND REPLACEMENTS.
19	2602-0000030	**SILT FENCE FOR DITCH CHECK**
		REFER TO TAB 100-18 ON SHEET C.5. THE TABULATION INCLUDES ESTIMATED LOCATIONS FOR PLACEMENT OF SILT FENCE
		FOR DITCH CHECKS TO ADDRESS POSSIBLE EROSION DURING CONSTRUCTION. VERIFY THE SPECIFIC LOCATIONS WITH THE
		ENGINEER PRIOR TO BEGINNING PLACEMENT. BID ITEM INCLUDES 50% ADDITIONAL QUANTITY FOR FIELD ADJUSTMENTS
		AND REPLACEMENTS.
20	2602-0000071	**REMOVAL OF SILT FENCE OR SILT FENCE FOR DITCH CHECKS**
		THIS ITEM IS INCLUDED FOR SILT FENCE AND SILT FENCE FOR DITCH CHECK REMOVAL REQUIRED FOR STAGING REASONS,
		REMOVAL TO ALLOW FOR REPLACEMENT (REPLACEMENT TO BE PAID SEPARATELY), OR FOR AREAS THAT HAVE ACHIEVED
		70% PERMANENT GROWTH.
21	2602-0000101	**MAINTENANCE OF SILT FENCE OR SILT FENCE FOR DITCH CHECKS**
		THIS ITEM INCLUDED FOR CLEAN-OUT AND REPAIR OF THE SILT FENCE AND SILT FENCE FOR DITCH CHECKS DURING THE
		GRADING PROJECT.
22	2602-0000212	**FLOATING SILT CURTAIN (HANGING)**
23	2602-0000240	**MAINTENANCE OF FLOATING SILT CURTAIN**
		REFER TO STANDARD ROAD PLAN EC-202 FOR DETAILS OF CONSTRUCTION.
		REFER TO TAB 100-10 ON SHEET C.5 FOR LOCATIONS.
24	2602-0000312	**PERIMETER AND SLOPE SEDIMENT CONTROL DEVICE, 12 IN. DIA.**
25	2602-0000320	**PERIMETER AND SLOPE SEDIMENT CONTROL DEVICE, 20 IN. DIA.**
26	2602-0000350	**REMOVAL OF PERIMETER AND SLOPE SEDIMENT CONTROL DEVICE**
		REFER TO TAB 100-19 ON SHEET C.5 FOR LOCATIONS.
		REFER TO STANDARD ROAD PLAN EC-204 FOR DETAILS OF CONSTRUCTION.
		VERIFY THE SPECIFIC LOCATIONS WITH THE ENGINEER PRIOR TO BEGINNING PLACEMENT.
27	2602-0010010	**MOBILIZATIONS, EROSION CONTROL**
28	2602-0010020	**MOBILIZATIONS, EMERGENCY EROSION CONTROL**

232-3B
Modified

EROSION CONTROL (URBAN SEEDING)

Following the completion of work in a disturbed area, place seed, fertilizer, and mulch on the disturbed area as follows:

Use seed mix and fertilizer meeting the requirements of Article 2601.03,C,4 and Section 4169 of the Standard Specifications.

Use mulch meeting the requirements of Articles 2601.03,E,2,a and 4169.07,A of the Standard Specifications.

Preparing the seedbed and furnishing and applying seed, fertilizer, and mulch is incidental to mobilization and will not be paid for separately.

232-10
10-21-14

EMERALD ASH BORER

Dispose of all wood material generated as a result of clearing and/or grubbing according to the Iowa Department of Agriculture and Land Stewardship's Emerald Ash Borer (EAB) Quarantine Order. For more information refer to http://www.iowatreepests.com/eab_regulations.html.

232-11
Modified

EROSION CONTROL (STABILIZING CROP SEEDING)

Following the completion of work in a disturbed area, place stabilizing crop, fertilizer, and mulch on the disturbed area as follows:

Use seed mix and fertilizer meeting the requirements of Article 2601.03,C,1 and Section 4169 of the Standard Specifications.

Use mulch meeting the requirements of Articles 2601.03,E,2,a and 4169.07,A of the Standard Specifications.

Preparing the seedbed and furnishing and applying seed, fertilizer, and mulch is incidental to mobilization and will not be paid for separately.

232-6
10-18-11

EROSION CONTROL (SELECTIVE CLEARING)

Selective clearing will be required on this project. Do not remove any trees outside of the construction limits without the Engineer’s approval.

105-4
10-18-11

STANDARD ROAD PLANS

The following Standard Road Plans apply to construction work on this project.

Number	Date	Title
BR-101	04-21-15	Bridge Approach Section (General Details)
BR-103	04-21-15	Bridge Approach Section (Two-Lane for Bridge Reconstruction, PCC Pavement)
DR-304	04-21-15	Outlets for Longitudinal, Transverse and Backslope Subdrains
EC-201	04-21-15	Silt Fence
EC-202	10-21-14	Floating Silt Curtain
EC-204	04-21-15	Perimeter and Slope Sediment Control Devices
EC-301	04-21-15	Rock Erosion Control (REC)
EW-202	10-21-14	Bridge Berm Grading without Recoverable Slope (Non-Barnroof Section)
EW-402	10-15-13	Temporary Stream Diversion
EW-403	10-15-13	Temporary Erosion Control Measures
PV-101	04-21-15	Joints
PV-102	04-15-14	PCC Curb Details
SI-173	04-20-10	Object Markers
SI-211	10-19-10	Object Marker and Delineator Placement with Guardrail
TC-1	04-16-13	Work Not Affecting Traffic (Two-Lane or Multi-Lane)
TC-202	04-21-15	Work Within 15 ft of Traveled Way
TC-252	04-21-15	Routes Closed to Traffic

111-25
10-18-11

INDEX OF TABULATIONS

Tabulation	Tabulation Title	Sheet No.
C Sheets		
100-0A	ESTIMATED ROADWAY QUANTITIES (1 DIVISION PROJECT)	C.1
100-1D	PROJECT DESCRIPTION	C.1
100-4A	ESTIMATE REFERENCE INFORMATION	C.1 - C.2
100-10	FLOATING SILT CURTAINS	C.5
100-17	TABULATION OF SILT FENCES	C.5
100-18	TABULATION OF SILT FENCES FOR DITCH CHECKS	C.5
100-19	PERIMETER AND SLOPE SEDIMENT CONTROL DEVICE	C.5
100-23	ROCK EROSION CONTROL	C.5
100-24	PCC PAVEMENT	C.6
100-27	PAVEMENT SMOOTHNESS + PCC TEXTURE	C.7
102-5	EXISTING PAVEMENT	C.6
103-4	TABULATION OF SPREADING TOPSOIL	C.5
103-7	SHRINKAGE DATA	C.5
105-4	STANDARD ROAD PLANS	C.3
107-22	WING DIKES	C.7
108-8A	STEEL BEAM GUARDRAIL AT CONCRETE BARRIER OR BRIDGE RAIL END SECTION	C.7
108-13A	SAFETY CLOSURES	C.5
110-1	REMOVAL OF PAVEMENT	C.7
110-12A	POLLUTION PREVENTION PLAN	C.4 - C.4
110-17	CLEARING AND GRUBBING	C.5
111-25	INDEX OF TABULATIONS	C.3
112-6	BRIDGE APPROACH SECTION	C.6
112-9	SHOULDERS	C.7
232-3B	EROSION CONTROL (URBAN SEEDING)	C.3
232-6	EROSION CONTROL (SELECTIVE CLEARING)	C.3
232-10	EMERALD ASH BORER	C.3
232-11	EROSION CONTROL (STABILIZING CROP SEEDING)	C.3

POLLUTION PREVENTION PLAN

This Base Pollution Prevention Plan (PPP) includes information on Roles and Responsibilities, Project Site Description, Controls, Maintenance Procedures, Inspection Requirements, Non-Storm Water Controls, Potential Sources of Off Right-of-Way Pollution, and Definitions. This plan references other documents rather than repeating the information contained in the documents. A copy of this Base Pollution Prevention Plan, amended as needed per plan revisions or by contract modification, will be readily available for review.

All contractors shall conduct their operations in a manner that controls pollutants, minimizes erosion, and prevents sediments from entering waters of the state and leaving the highway right-of-way. The prime contractor shall be responsible for compliance and implementation of the PPP for their entire contract. This responsibility shall be further shared with subcontractors whose work is a source of potential pollution as defined in this PPP.

I. ROLES AND RESPONSIBILITES

A. Designer:
1. Prepares Base PPP included in the project plan.
2. Prepares Notice of Intent (NOI) submitted to Iowa DNR.
3. Signature authority on the Base PPP and NOI.

B. Contractor/Subcontractor:
1. Affected contractors/subcontractors are co-permittees with the IDOT and will sign a certification statement adhering to the requirements of the NPDES permit and this PPP plan. All co-permittees are legally required under the Clean Water Act and the Iowa Administrative Code to ensure compliance with the terms and conditions of this PPP.
2. Submit a detailed schedule according to Article 2602 of the Specifications and any additional plan notes.
3. Install and maintain appropriate controls.
4. Supervise and implement good housekeeping practices.
5. Conduct joint required inspections of the site with inspection staff.
6. Signature authority on Co-Permittee Certification Statements and storm water inspection reports.

C. RCE/Inspector:
1. Update PPP whenever there is a change in design, construction, operation or maintenance, which has a significant effect on the discharge of pollutants from the project.
2. Maintain an up-to-date list that identifies contractors and subcontractors as co-permittees.
3. Make these plans available to the DNR upon their request.
4. Conduct joint required inspections of the site with the contractor/subcontractor.
5. Complete an inspection report after each inspection.
6. Signature authority on storm water inspection reports and Notice of Discontinuation (NOD).

II. PROJECT SITE DESCRIPTION

A. This Pollution Prevention Plan (PPP) is for the construction of three roadway sites at Springbrook State Park, including 1 bridge and 1 RCB reconstruction.

B. This PPP covers approximately 2.3 acres with an estimated 2.2 acres being disturbed. The portion of the PPP covered by this contract has 2.2 acres disturbed.

C. The PPP is located in an area of one soil association Sharpsburg - Shelby - Adair. The estimated average SCS runoff curve number for this PPP after completion will be 87.

D. Storm Water Site Map - Multiple sources of information comprise the base storm water site map including:
1. Drainage patterns – Plan and Profile sheets and Situation plans.
2. Proposed Slopes – Cross Sections.
3. Areas of Soil Disturbance – construction limits shown on Plan and Profile sheets.
4. Location of Structural Controls – Tabulations on C sheets.
5. Locations of Non-structural Controls – Tabulations on C sheets.
6. Locations of Stabilization Practices – generally within construction limits shown on Plan and Profile sheets.
7. Surface Waters (including wetlands) – Plan and Profile sheets.
8. Locations where storm water is discharged – Plan and Profile sheets.

E. The base site map is amended by contract modifications and progress payments of completed erosion control work.

F. Runoff from this work will flow into Springbrook Creek, Middle Racoon River and Lake Panorama.

III. CONTROLS

A. The contractor's work plan and sequence of operations specified in Article 2602.03 for accomplishment of storm water controls should clearly describe the intended sequence of major activities and for each activity define the control measure and the timing during the construction process that the measure will be implemented.

B. Preserve vegetation in areas not needed for construction.

C. Section 2601 and 2602 of the Standard Specifications define requirements to implement erosion and sediment control measures. Actual quantities used may vary from the Base PPP and amendment of the plan will be documented via fieldbook entries or by contract modification. Additional erosion and sediment control items may be required as determined by the inspector and/or contractor during storm water monitoring inspections. If the work involved is not applicable to any contract items, the work will be paid for according to Article 1109.03 paragraph B.

1. EROSION AND SEDIMENT CONTROLS

a. Stabilization Practices
1) Site plans will ensure that existing vegetation is preserved where attainable and disturbed portions of the site will be stabilized.
2) Stabilization measures shall be initiated as soon as practicable in portions of the site where construction activities have temporarily or permanently ceased.
3) Temporary stabilizing seeding shall be completed as the disturbed areas are constructed. If construction activity is not planned to occur in a disturbed area for at least 21 days, the area shall be stabilized by temporary seeding or mulching within 14 days. Other stabilizing methods shall be used outside the seeding time period.
4) Stabilization measures to be used for this project are located in the Estimated Project Quantities (100-1A) and Estimate Reference Information (100-4A) located on the C sheets of the plan. Additional items may be found in the Inspector's Daily Reports (IDR) or Contract Modifications.

b. Structural Practices
1) Structural practices will be implemented to divert flows from exposed soils and detain or otherwise limit runoff and the discharge of pollutants from exposed areas of the site.
2) Structural items to be used for this project are located in the Estimated Project Quantities (100-1A) and Estimate Reference Information (100-4A) located on the C sheets of the plan, as well as all other item specific Tabulations. Typical drawings detailing construction of the devices to be used on this project can be found on the B sheets of the plan or are referenced in the Standard Road Plans Tabulation.

c. Storm Water Management
1) Measures shall be installed during the construction process to control pollutants in storm water discharges that will occur after construction operations have been completed. The installation of these devices may be subject to Section 404 of the Clean Water Act.

2. OTHER CONTROLS

a. Contractor disposal of unused construction materials and construction material wastes shall comply with applicable state and local waste disposal, sanitary sewer, or septic system regulations. In the event of a conflict with other governmental laws, rules and regulations, the more restrictive laws, rules or regulations shall apply.
1) Vehicle Entrances and Exits - Construct and maintain entrances and exits to prevent tracking of sediments onto roadways.
2) Material Delivery, Storage and Use - Implement practices to prevent discharge of construction materials during delivery, storage, and use.
3) Stockpile Management - Install controls to reduce or eliminate pollution of storm water from stockpiles of soil and paving.
4) Waste Disposal - Do not discharge any materials, including building materials, into waters of the state, except as authorized by a Section 404 permit.
5) Spill Prevention and Control - Implement procedures to contain and clean-up spills and prevent material discharges to the storm drain system and waters of the state.
6) Concrete Residuals and Washout Wastes - Designate temporary concrete washout facilities for rinsing out concrete trucks. Provide directions to truck drivers where designated washout facilities are located.
7) Vehicle and Equipment Cleaning - Employ washing practices that prevent contamination of surface and ground water from wash water.
8) Vehicle and Equipment Fueling and Maintenance - Perform on site fueling and maintenance in accordance with all environment laws such as proper storage of onside fuels and proper disposal of used engine oil or other fluids on site.
9) Litter Management - Ensure employees properly dispose of litter.

3. APPROVED STATE OR LOCAL PLANS

During the course of this construction, it is possible that situations will arise where unknown materials will be encountered. When such situations are encountered, they will be handled according to all federal, state, and local regulations in effect at the time.

IV. MAINTENANCE PROCEDURES

The contractor is required to maintain all temporary erosion and sediment control measures in proper working order, including cleaning, repairing, or replacing them throughout the contract period. This shall begin when the features have lost 50% of their capacity.

V. INSPECTION REQUIREMENTS

A. Inspections shall be made jointly by the contractor and the contracting authority at least once every seven calendar days. Storm water monitoring inspections will include:
1. Date of the inspection.
2. Summary of the scope of the inspection.
3. Name and qualifications of the personnel making the inspection.
4. Rainfall amount.
5. Review erosion and sediment control measures within disturbed areas for the effectiveness in preventing impacts to receiving waters.
6. Major observations related to the implementation of the PPP.
7. Identify corrective actions required to maintain or modify erosion and sediment control measures.

B. Include storm water monitoring inspection reports in the Amended PPP. Incorporate any additional erosion and sediment control measures determined as a result of the inspection. Immediately begin corrective actions on all deficiencies found and complete all actions within 3 calendar days of the inspection.

VI. NON-STORM WATER DISCHARGES

This includes subsurface drains (i.e. longitudinal and standard subdrains) and slope drains. The velocity of the discharge from these features may be controlled by the use of patio blocks, Class A stone, erosion stone or other appropriate materials.

VII. POTENTIAL SOURCES OF OFF RIGHT-OF-WAY (ROW) POLLUTION

Silts, sediment, and other forms of pollution may be transported onto highway right-of-way (ROW) as a result of a storm event. Potential sources of pollution located outside highway ROW are beyond the control of this PPP. Pollution within highway ROW will be conveyed and controlled per this PPP.

VIII. DEFINITIONS

A. Base PPP - Initial Pollution Prevention Plan.
B. Amended PPP - May include Plan Revisions or Contract Modifications for new items and fieldbook entries made by the inspector.
C. IDR - Inspector's Daily Report – this contains the inspector's daily diary and item postings.
D. Controls - Methods, practices, or measures to minimize or prevent erosion, control sedimentation, control storm water, or minimize contaminants from other types of waste or materials.
E. Signature Authority - Representative from Designer, Contractor/Subcontractor, or RCE/Inspector authorized to sign various storm water documents.

CERTIFICATION STATEMENT

I certify under penalty of law that this document and all attachments were prepared under my direction or supervision in accordance with a system designed to assure that qualified personnel properly gathered and evaluated the information submitted. Based on my inquiry of the person or persons who manage the system, or those persons directly responsible for gathering the information, the information submitted is, to the best of my knowledge and belief, true, accurate, and complete. I am aware that there are significant penalties for submitting false information, including the possibility of fine and imprisonment for knowing violations.

Signature

Printed or Typed Name

100-10
10-21-14

FLOATING SILT CURTAINS

Refer to EC-202

Station	Hanging	Containment	Clean-out (Containment)	Maintenance of Floating Silt Curtain	Remarks
	LF	LF	LF	LF	
210+00.00	100.0			50.0	
210+00.00	100.0			50.0	

100-17
04-20-10

TABULATION OF SILT FENCES

Refer to EC-201

Location			Length	Remarks
Begin Station	End Station	Side	LF	
209+40.00	209+75.00	LT	75.0	
210+05.00	211+00.00	LT	135.0	
			50.0	DISCRETIONARY

100-18
04-20-10

TABULATION OF SILT FENCES FOR DITCH CHECKS

Refer to EC-201

Location Station	Side	Length	Remarks
		LF	
209+90.00	LT	30.0	
209+90.00	RT	30.0	
210+15.00	LT	30.0	
210+15.00	RT	30.0	
		60.0	DISCRETIONARY

103-7
08-01-08

SHRINKAGE DATA

Material	%	Remarks
CLASS 10	30%	
TOPSOIL	40%	
ESTIMATED BOULDER QTY		15 CY

108-13A
08-01-08

SAFETY CLOSURES

Refer to Section 2518 of the Standard Specifications

Station	Closure Type		Remarks
	Road Qty.	Hazard Qty.	
	1		SITE ENTRANCE
208+50.00		1	
211+50.00		1	

100-19
10-16-12

PERIMETER AND SLOPE SEDIMENT CONTROL DEVICE

Refer to EC-204

Location			Length of Installation				Remarks
Begin Station	End Station	Side	6 inch Dia	9 inch Dia	12 inch Dia	20 inch Dia	
			LF	LF	LF	LF	
209+18.00	209+90.00	LT			125.0		AROUND WING DIKE
209+40.00	209+76.00	RT			130.0		
210+16.00	210+98.00	LT			60.0		
210+16.00	210+98.00	RT			95.0		
						200.0	DISCRETIONARY

100-23
04-21-15

ROCK EROSION CONTROL

Refer to EC-301

Location				L	W	Rock Erosion Control (REC)					Material Bid Quantities			Remarks
Road Identification	Begin Station	End Station	Side			Type 1	Type 2	Type 3	Type 4	Type 5	Erosion Stone	Class E Revetment	Eng. Fabric	
			Lt./Rt.	FT	FT	Rock Ditch Check	Rock Ditch	Rock Flume	Rock Splash Basin	Rock Slope Protection	TON	TON	SY	
SITE 2	210+40.00	210+25.00	LT	35	6		X				25.0		39.0	REFER TO U.1
REFER TO BRIDGE SHEETS FOR PAY ITEM QUANTITIES FOR ENGINEERING FABRIC.														

103-4
04-19-11

TABULATION OF SPREADING TOPSOIL

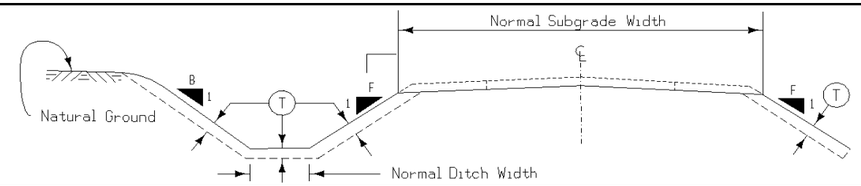

Perform this work according to Section 2105. Prior to placing topsoil on any cohesive soil, scarify the area to be covered to a minimum depth of 3 inches.

Appropriate adjustments have been made in the template quantities to reflect the placement of topsoil on foreslope, backslope and ditch bottom as detailed hereon.

Placement Description							Remarks	Topsoil Excavation Available From			Remarks
Area No.	Quantity CY	Location Station to Station		Side L. or R.	Slope B. or F.	T IN		Amount Reserved CY	Station to Station		
1	9.7	209+18.00	209+93.00	L	F	6.0		15.0	209+18.00	209+93.00	
2	4.7	209+40.00	209+76.00	R	F	6.0		7.0	209+40.00	209+76.00	
3	10.0	210+21.00	210+98.00	L	F	6.0		15.0	210+21.00	210+98.00	
4	11.7	210+08.00	210+98.00	R	F	6.0		18.0	210+08.00	210+98.00	
5	9.7	209+62.00	209+87.00	L	WING	6.0		15.0	209+62.00	209+87.00	
6	21.4	210+23.00	210+57.00	L	FLUME/WING	6.0		32.0	210+23.00	210+57.00	

110-17
04-15-14

CLEARING AND GRUBBING

Location		Work and Material Type	Trees, Stumps, and Logs and Down Timber Material Diameters													All Other Materials		Estimated Quantities			Remarks
Station to Station or Milepost to Milepost or Description	Direction of Travel		3"-6"	>6"-9"	>9"-12"	>12"-15"	>15"-18"	>18"-24"	>24"-30"	>30"-36"	>36"-42"	>42"-48"	>48"-60"	>60"-72"	>72"	Length	Width	Units	Area	Herbicide Application	
																FT	FT	Units	Acres	Each	
209+82, 25'	LT	Brush - Clearing														5.0	5.0	0.2			
210+52, 44'	LT	Trees - Clearing and Grubbing		1														3.9			

102-5
10-16-12

EXISTING PAVEMENT

No.	Location					Year	Type	Project Number	Surface		Base		Subbase		Removal		Coarse Aggregate			Reinforcement	Remarks
	County	Route	Dir. of Travel	Begin Milepost	End Milepost				Type	Depth IN	Type	Depth IN	Type	Depth IN	Type	Depth IN	Source	Type	Durability Class	Type	
1	GUTHRIE	LOCAL	BOTH			UNKNOWN	HMA		HMA	6											ESTIMATED PAVEMENT STRUCTURE

100-24
04-21-15

PCC PAVEMENT

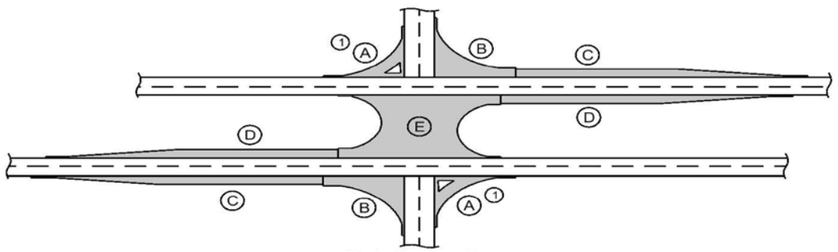

Typical Intersection

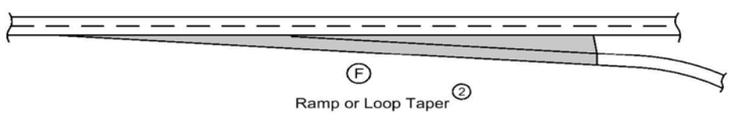

Ramp or Loop Taper (2)

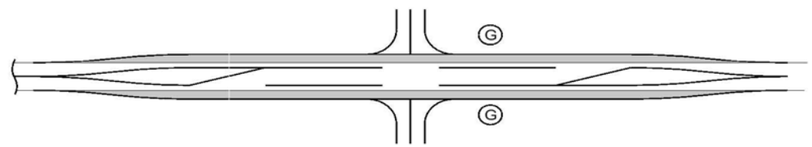

Channelized Intersection
Widen Existing Roadway

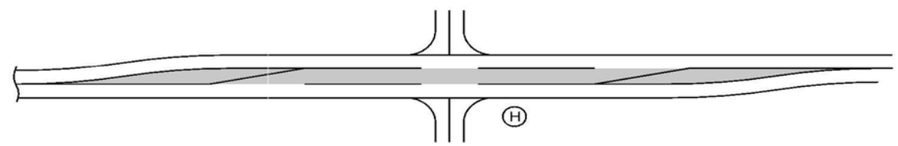

Channelized Intersection
Reconstructed Roadway

(1) Does not include raised island area or curb. Refer to tabulation 112-4 for quantities.

(2) Refer to PV-410, PV-411, PV-412, and PV-414.

(3) Quantity includes Pavement Header.

Location				Mainline			Area (3)								Total Area By Pavement Thickness		Special Backfill	Modified Subbase	Granular Subbase	Remarks
Road Identification	Direction of Travel	Station to Station		Width	Length	Area	A (1)	B	C	D	E	F (2)	G	H						
				FT	FT	SY	SY	SY	SY	SY	SY	SY	SY	SY	SY 7 IN	SY 10½ IN	TONS	CY	SY	
SIDE ROAD RT	BOTH	209+18.00	209+48.00	7.0	30.3	21.4									21.4		6.7			
SITE 2	BOTH	210+81.70	210+98.00	24.0	16.3	43.5									43.5		17.4			
SIDE ROAD LT - TAPER	EB	210+81.70	210+98.00	VAR	VAR			6.5							6.5		2.1			

112-6
04-21-15

BRIDGE APPROACH SECTION

Refer to the BR Series.

* Not a bid item

Location				Approach Pavement					Fixed or Movable Abutment	Standard Road Plan	Subdrain					* Modified Subbase	* Polymer Grid	Remarks
Bridge Station	End	Skew Ahead Degrees LEFT	Skew Ahead Degrees RIGHT	(T) Thickness	Pay Length	Non-Reinf. Pavement Area	Single-Reinf. Pavement Area	Double-Reinf. Pavement Area			* Perforated Subdrain 4"	* Subdrain Outlet		* Porous Backfill	* Class 'A' Crushed Stone Backfill			
				Inches	FT	SY	SY	SY	F or M	BR Series	LF	STA	Side	CY	CY	TON	SY	
210+00.00	W	15		13.0	70.0	133.3	71.6	0.0	F	BR-103	105.0	209+93.00	LT	8.0	0.5	219.000	239.0	OUTLET TO CREEK
210+00.00	E	15		13.0	70.0	133.3	71.4	0.0	F	BR-103	96.0	210+08.00	RT	7.0	0.5	219.000	239.0	OUTLET TO CREEK

112-9
10-15-13

SHOULDERS

(1) Lane(s) to which the shoulder is adjacent.
(2) Bid Item
(3) Applies only for Paved Shoulders constructed on project with existing granular shoulders.
(4) Does not include shrink.

Calculations assume a HMA unit weight (lbs/cf) of 0, a Special Backfill unit weight (lbs/cf) of 140, and a Granular Shoulder unit weight (lbs/cf) of 140.

Location					Quantities																		
Road Identification	(1) Direction Of Traffic	Station to Station		Side	(P) Width	(G) Width	(L) Length	Class 13 Excavation (3)	Hot Mix Asphalt		Binder	Paved Shoulder	Reinforced Paved Shoulder	Special Backfill				Modified Subbase	Granular Shoulder		Earth Shoulder Construction Alternates			Remarks
														HMA Alternate		PCC Alternate								
					FT	FT	FT	CY (2)	TON	TON/STA	TONS	SY (2)	SY (2)	TON (2)	TON/STA	TON (2)	TON/STA	CY (2)	TON (2)	TON/STA	STA (2)	HMA CY (4)	PCC CY (4)	
SITE 2		209+18.00	209+68.30	LT	0.0	3.0	50.3					0.0							5.7	11.4	0.5			
SITE 2		209+68.30	209+92.60	LT	0.0	0.0	24.3					0.0							0.0	0.0	0.2			BRIDGE APPROACH
RCB																								
SITE 2		210+16.10	210+31.70	LT	0.0	0.0	15.6					0.0							0.0	0.0	0.2			BRIDGE APPROACH
SITE 2		210+31.70	210+98.00	LT		3.0	66.3												7.5	11.4	0.7			
SITE 2		209+41.90	209+68.30	RT	0.0	3.0	26.4					0.0							3.0	11.4	0.3			
SITE 2		209+68.30	209+83.90	RT	0.0	0.0	15.6					0.0							0.0	0.0	0.2			BRIDGE APPROACH
RCB																								
SITE 2		210+07.50	210+31.70	RT	0.0	0.0	24.2					0.0							0.0	0.0	0.2			BRIDGE APPROACH
SITE 2		210+31.70	210+98.00	RT	0.0	3.0	66.3					0.0							7.5	11.4	0.7			

100-27
10-20-09

PAVEMENT SMOOTHNESS + PCC TEXTURE

Road Identification	Begin Station	End Station	Proposed Posted Speed			Remarks
			35 or less	40 - 45	over 45	
SITE 2	209+18.00	209+88.20	X			SMOOTHNESS WAIVED / MICRO TEXTURE
SITE 2	210+11.80	210+98.00	X			SMOOTHNESS WAIVED / MICRO TEXTURE

110-1
04-16-13

REMOVAL OF PAVEMENT

Refer to Tabulation 102-5

* Not a Bid Item

Begin Station	End Station	Side	Pavement Type	Area	Saw Cut*	Remarks
				SY	LF	
209+18.00	209+87.90	BOTH	HMA	201.7	52.3	
210+11.90	210+98.00	BOTH	HMA	222.9	28.6	

108-8A
10-21-14

STEEL BEAM GUARDRAIL AT CONCRETE BARRIER OR BRIDGE RAIL END SECTION

Refer to BA-200, BA-201, BA-202, BA-205, BA-206, BA-210, BA-211, BA-250, SI-172, SI-173 and SI-211.

(1) Lane(s) to which the obstacle is adjacent.

Location					Layout Lengths				Long-Span System		Delineators and Object Markers					Bid Items							Remarks
No.	(1) Direction of Traffic	Side O = Outside M = Median	Station	Offset	BA-250 VT1	VF	VT2	(ET) ET (37.5' or 50.0')	BA-211		SI-211	Delineator SI-172 Type 1	Object Marker SI-173 Type 2	Type 3		Bolted End Anchor		Barrier Transition Section	Steel Beam Guardrail	End Terminal Standard	End Terminal Flared	Post Adapter	
												White	OM2-2	OM3-L	OM3-R	BA-202		BA-201	BA-200	BA-205	BA-206	BA-210	
				FT	LF	LF	LF	LF	STATION	TYPE	TYPE	EACH	EACH	EACH	EACH	TYPE	EACH	EACH	LF	EACH	EACH	EACH	
1		O	209+83.70	15.8											1								NO GUARDRAIL - OBJECT MARKER ONLY
2		O	209+92.50	-15.8										1									NO GUARDRAIL - OBJECT MARKER ONLY
3		O	210+07.50	15.8										1									NO GUARDRAIL - OBJECT MARKER ONLY
4		O	210+16.20	-15.8											1								NO GUARDRAIL - OBJECT MARKER ONLY

107-22
04-16-13

WING DIKES

Refer to Standard Road Plan EW-210.

Location Station	Top Elevation	Length	Bridge Skew	Earthwork
		FT		CY
209+90.00	1066.2	NON-STANDARD		27.0
210+50.00	1066.2	NON-STANDARD		16.0

SURVEY SYMBOLS

- PIP Pipe Culvert
- TDC Tree Deciduous
- BLD Building or Foundation
- MIS Miscellaneous
- SIGN SI Sign
- GP GP Guard Post (Less Than 4 Posts)
- TLNL Tree Line Left
- CUL Culvert
- OUT Tile Outlet
- BRG Bridge
- TLNR Tree Line Right
- SHR Shrub
- SIGN SL Speed Limit Sign
- CON Concrete or A/C Slab
- EP Edge of Paved Roads (ML or SR)
- EW Edge of Water
- BNK Stream Bank
- SP Stream Profile
- EG Edge of Gravel Road
- TW Top of Water

UTILITY LEGEND

- WHU WHU RV Water Hook Up
- WV WV Water Valve
- EB EB Electrical Box
- TP TPD Telephone Pedestal

PLAN VIEW COLOR LEGEND OF PLAN AND PROFILE SHEETS

LINEWORK	Design Color No.	
Green	(2)	Existing Topographic Features and Labels
Blue	(1)	Proposed Alignment, Stationing, Tic Marks, and Alignment Annotation
Magenta	(5)	Existing Utilities
SHADING	**Design Color No.**	
Yellow	(4)	Highlight for Critical Notes or Features
Red	(3)	Delineates Restricted Areas
Lavender	(9)	Temporary Pavement Shading
Gray, Light	(48)	Proposed Pavement Shading
Gray, Med	(80)	Proposed Granular Shading
Gray, Dark	(112)	Proposed Grade and Pave Shading "In conjunction with a paving project"
Brown, Light	(236)	Grading Shading
Tan	(8)	Proposed Sidewalk Shading
Blue, Light	(230)	Proposed Sidewalk Landing Shading
Pink	(11)	Proposed Sidewalk Ramp Shading

PROFILE VIEW COLOR LEGEND OF PLAN AND PROFILE SHEETS

LINEWORK	Design Color No.	
Green	(2)	Existing Ground Line Profile
Blue	(1)	Proposed Profile and Annotation
Magenta	(5)	Existing Utilities
Blue, Light	(230)	Proposed Ditch Grades, Left
Black	(0)	Proposed Ditch Grades, Median
Rust	(14)	Proposed Ditch Grades, Right

- Reference Point
- Station
- Survey Line
- Section Corner
- Ground Line Intercept
- Saw Cut
- Guardrail
- Trench Drain
- HighTension Cable Guardrail
- Sheet Pile
- Pavement Removal
- Clearing & Grubbing Area

RIGHT-OF-WAY LEGEND

- Proposed Right-of-Way
- Existing Right of Way
- Existing and Proposed Right-of-Way
- Easement and Existing Right-of-Way
- Easement (Temporary)
- Easement
- C/A Access Control
- Property Line

PLAN AND PROFILE LEGEND AND SYMBOL INFORMATION SHEET

(COVERS SHEET SERIES D, E, F, & K)

For Wing dike Detail
Refer to Sheet No. U. 1

For Geometric & Jointing Details
Refer to Sheet No. L. 1

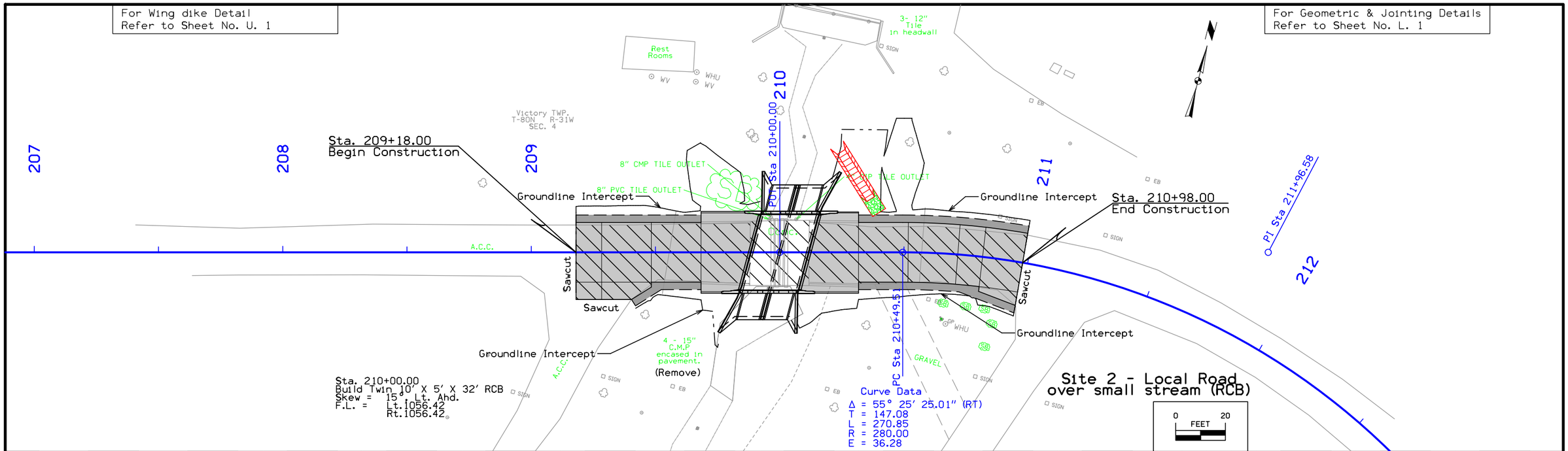

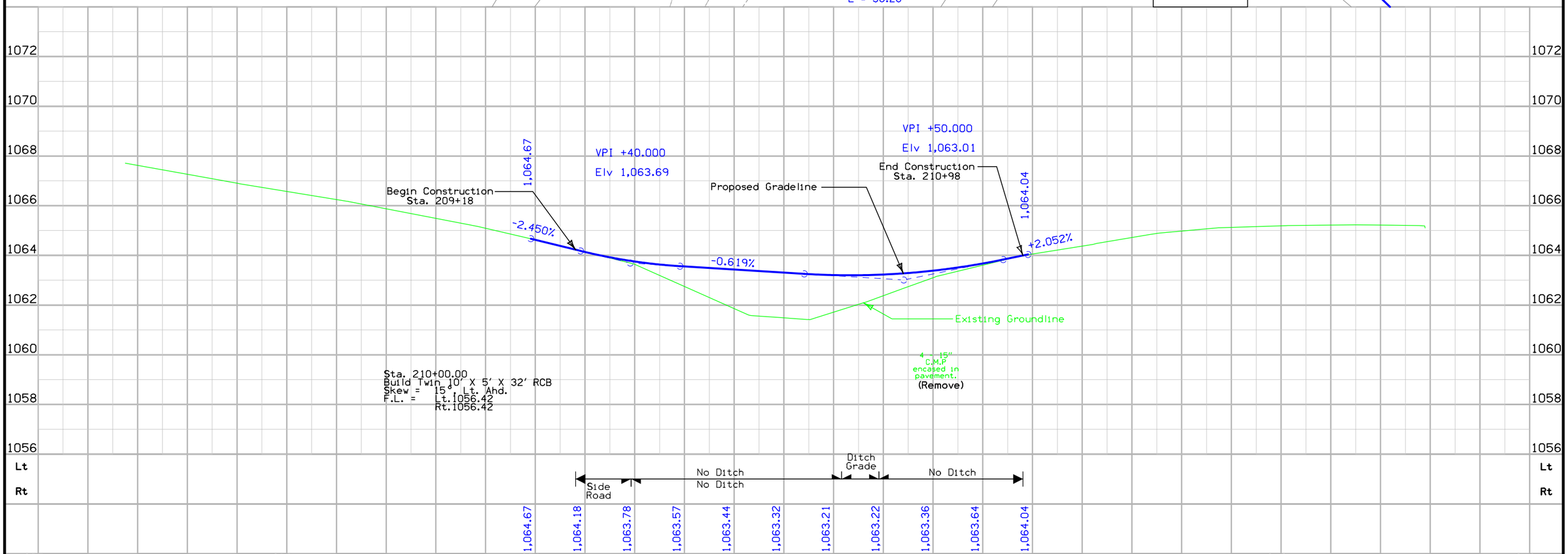

FILE NO. 31222	ENGLISH	DESIGN TEAM hgm	GUTHRIE COUNTY	PROJECT NUMBER SP-650-0(10)--7C-39	SHEET NUMBER D.2

11:34:23 AM 4/8/2015 BTH W:\Projects\3965001012\Design\3965010D2.dgn

STA. 206+33.29, RT. 242.27' LT. (S - 2)
C.P. 500 - Base Point A
N=648272.970, E=1376670.780

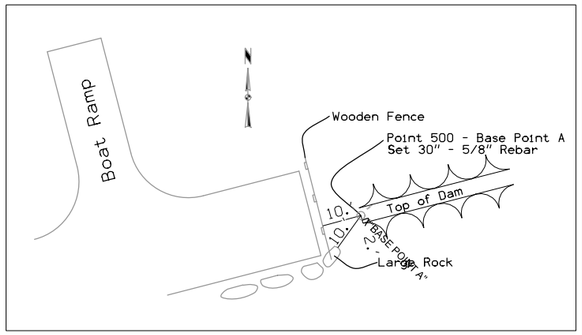

STA. 210+54.11, 73.57' RT. (S - 2)
C.P. 102
N=648072.069, E=1377156.037

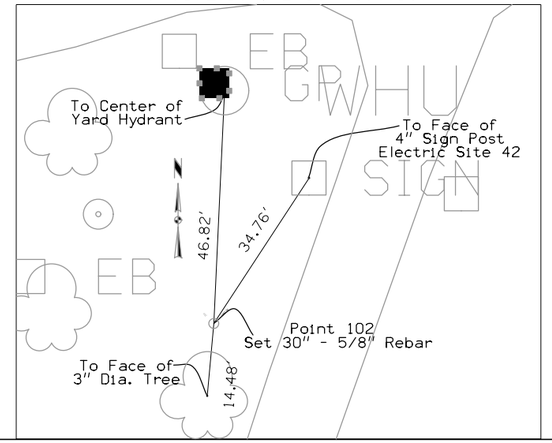

STA. 213.82.41, 16.35' LT.' RT. (S-2)
C.P. 104
N=648054.555, 1377445.437

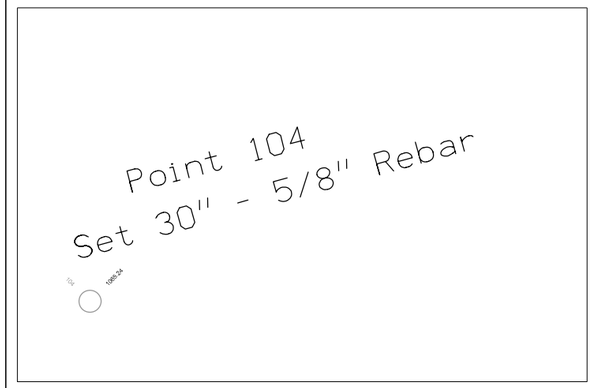

STA. 115+61.72, LT. 196.993 (S - 1)
C.P. 103, 30" X 5/8" REBAR
N=647512.69, E=1376520.51

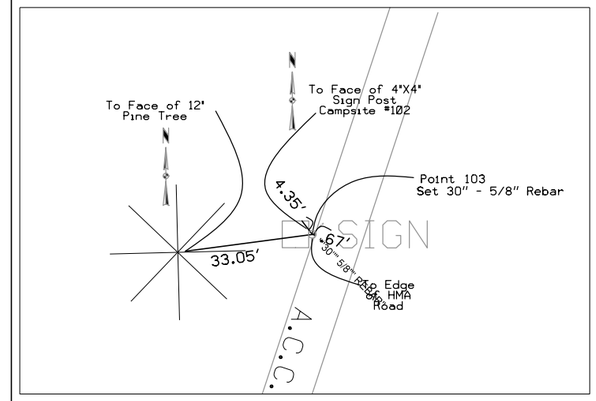

C.P. STA. 113+60.07, 22.22 LT.(S - 1)
C.P. 101, 30" X 5/8" REBAR
N=647245.716, E=1376472.426

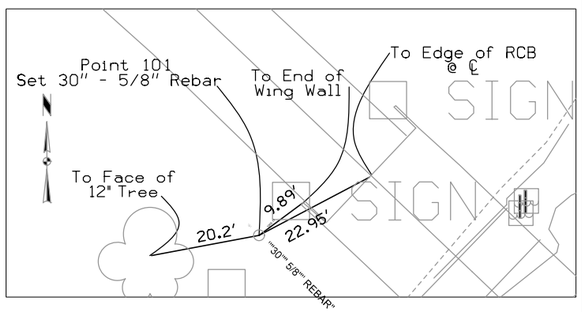

VERTICAL CONTROL

Point	North	East	Elevation	Station	Offset	Feature	Description
101	647245.716	1376472.426	1056.167	113+60.07	-22.217	CP	""30"" 5/8"" REBAR", Site 1
103	647512.690	1376520.510	1060.190	115+61.72	196.993	CP	""30"" 5/8"" REBAR", Site 1

Point	North	East	Elevation	Station	Offset	Feature	Description
102	648072.069	1377156.037	1062.350	114+34.69	1047.650	CP	Site 2
104	648054.555	1377445.437	1065.240	112+42.70	1234.966	CP	Site 2
500	648272.970	1376670.780	1000.000	Off Chain	Off Chain	CP	""BASE POINT A" Site 2

ALIGNMENT COORDINATES

101-16
10-20-09

Name	Location	Point on Tangent			Begin Spiral			Begin Curve			Simple Curve PI or Master PI of SCS			End Curve			End Spiral		
		Station	Coordinates		Station	Coordinates		Station	Coordinates		Station	Coordinates		Station	Coordinates		Station	Coordinates	
			Y (Northing)	X (Easting)		Y (Northing)	X (Easting)		Y (Northing)	X (Easting)		Y (Northing)	X (Easting)		Y (Northing)	X (Easting)		Y (Northing)	X (Easting)
21000	SITE 2 - LOCAL RD.	205+87.26	648,026.91	1,376,686.78															
21001	SITE 2 - LOCAL RD.	210+00.00	648,130.11	1,377,086.42															
21002	SITE 2 - LOCAL RD.							210+49.51	648,142.48	1,377,134.35	211+96.58	648,179.26	1,377,276.75	213+20.36	648,082.87	1,377,387.85			
21003	SITE 2 - LOCAL RD.	214+20.09	648,017.52	1,377,463.18															
21010	WEST WING DIKE	309+90.00	648,127.60	1,377,076.73															
21011	WEST WING DIKE	310+65.00	648,181.12	1,377,024.18															
21020	EAST WING DIKE	410+50.00	648,142.61	1,377,134.83															
21021	EAST WING DIKE	411+25.00	648,215.26	1,377,116.20															
21061	LEFT DITCH ALI	910+25.00	648,175.09	1,377,100.62															
21062	LEFT DITCH ALI	910+53.30	648,155.60	1,377,121.14															

SPIRAL OR CIRCULAR CURVE DATA

101-17
04-19-11

Name	Location	Δ_{scs}	Horizontal Alignment Data													Remarks
			Spiral Data								Curve Data					
			θs	Ls	Ts	Es	Xc	Yc	L.T.	S.T.	Δ_c	T	L	R	E	
21002	SITE 2 - LOCAL RD.										55° 25′ 25.01″ RT	147.08′	270.85′	280.00′	36.28′	

108-23A
08-01-08

TRAFFIC CONTROL PLAN

Site 2 Local Road over Small stream, will be closed to traffic during construction. The Local Road has one access point to the southwest. That access point will be closed. Additional Hazard Closures will be placed in the proximity of the Site 2 Project.

Contractor shall utilize Standard Road Plans TC-1, TC-202 and TC-252, Situation 5.

111-01
04-17-12

COORDINATED OPERATIONS

Other work in progress during the same period of time will include the construction of the projects listed. Coordinate operations with those of other contractors working within the same area.

Project	Type of Work
SP-650-0(9)--7C-39	BRIDGE CONSTRUCTION

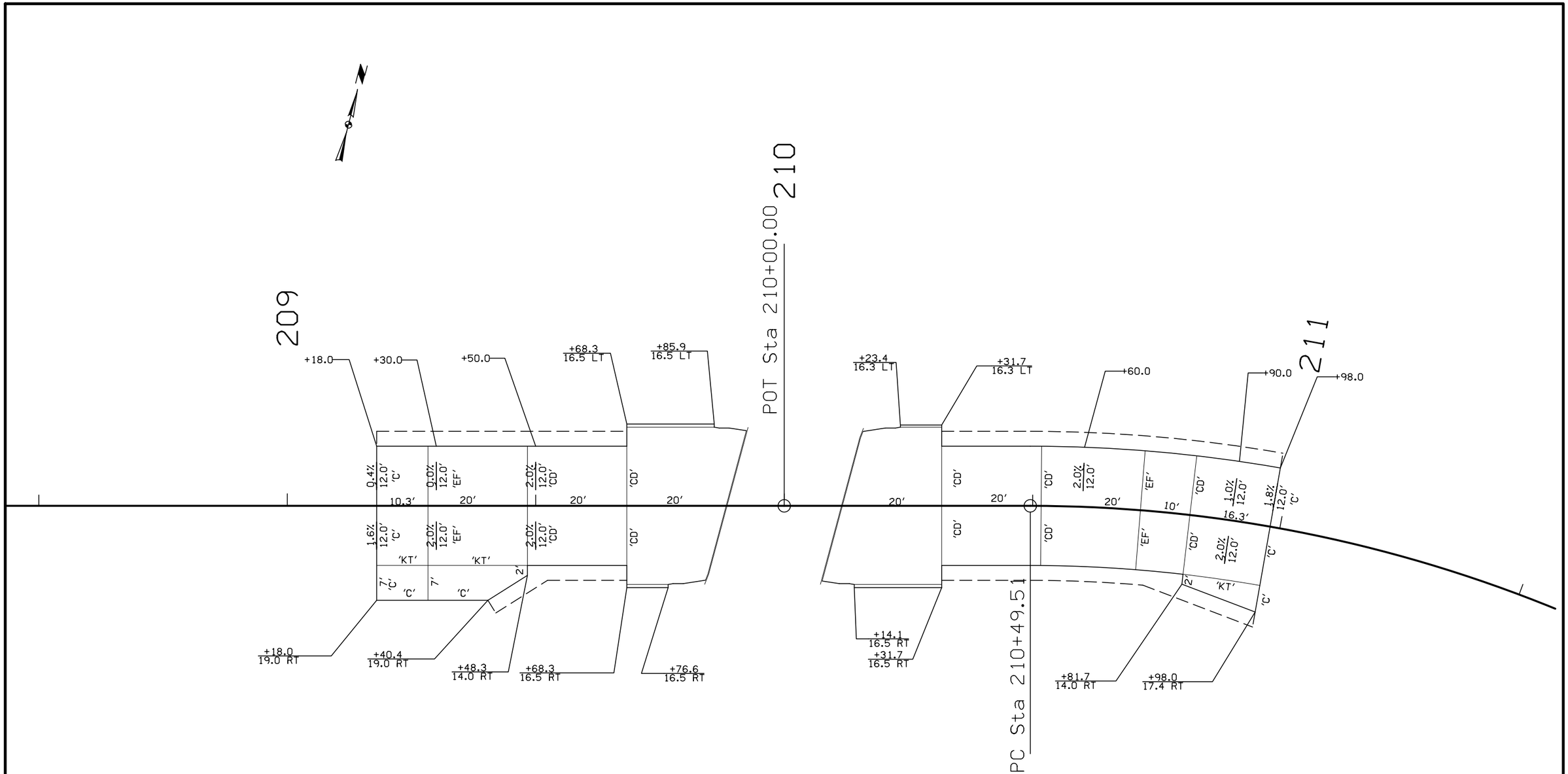

Curve Data

Δ = 55° 25′ 25.01″ (RT)
T = 147.08
L = 270.85
R = 280.00
E = 36.28

0 FEET 10

FILE NO. 31222	ENGLISH	DESIGN TEAM hgm	GUTHRIE COUNTY	PROJECT NUMBER SP-650-0(10)--7C-39	SHEET NUMBER L.1

11:29:51 AM 4/8/2015 BTH W:\Projects\3965001012\Design\3965010L1.dgn

TABULATION OF TEMPLATE QUANTITIES AND ADJUSTMENTS

Refer to Standard Road Plans EW-101 and EW-102.

STATION	TOTAL CUT	CLASS 10 SUITABLE CUT	ADJUSTED CLASS 10 TOTAL	TOTAL FILL	CLASS 10 SUITABLE + 30% SHRINK	TOTAL FILL WITH SHRINK		APPROX. FILL VOLUME BELOW 3 FT	APPROX. FILL VOLUME BELOW 5 FT				
209+18.00	11	11	11					0	0				
209+25.00	40	40	40					0	0				
209+50.00	38	38	38	23	30	30		23	23				
209+75.00	10	10	10	9	12	12		9	9				
209+83.79	15	15	15	1	1	1		1	1				
209+88.31	23	23	23	2	3	3		2	2				
209+92.55								0	0				
210+07.45	23	23	23	5	7	7		5	5				
210+11.69	14	14	14	5	7	7		5	5				
210+16.14	9	9	9	8	10	10		8	8				
210+25.00	33	33	33	11	14	14		11	11				
210+50.00	34	34	34					0	0				
210+75.00	27	27	27					0	0				
210+97.00								0	0				
Totals	277	277	277	64	84	84	0	64	64				

STATION	TOTAL CUT	CLASS 10 SUITABLE CUT	ADJUSTED CLASS 10 TOTAL	TOTAL FILL	CLASS 10 SUITABLE + 30% SHRINK	TOTAL FILL WITH SHRINK		APPROX. FILL VOLUME BELOW 3 FT	APPROX. FILL VOLUME BELOW 5 FT				

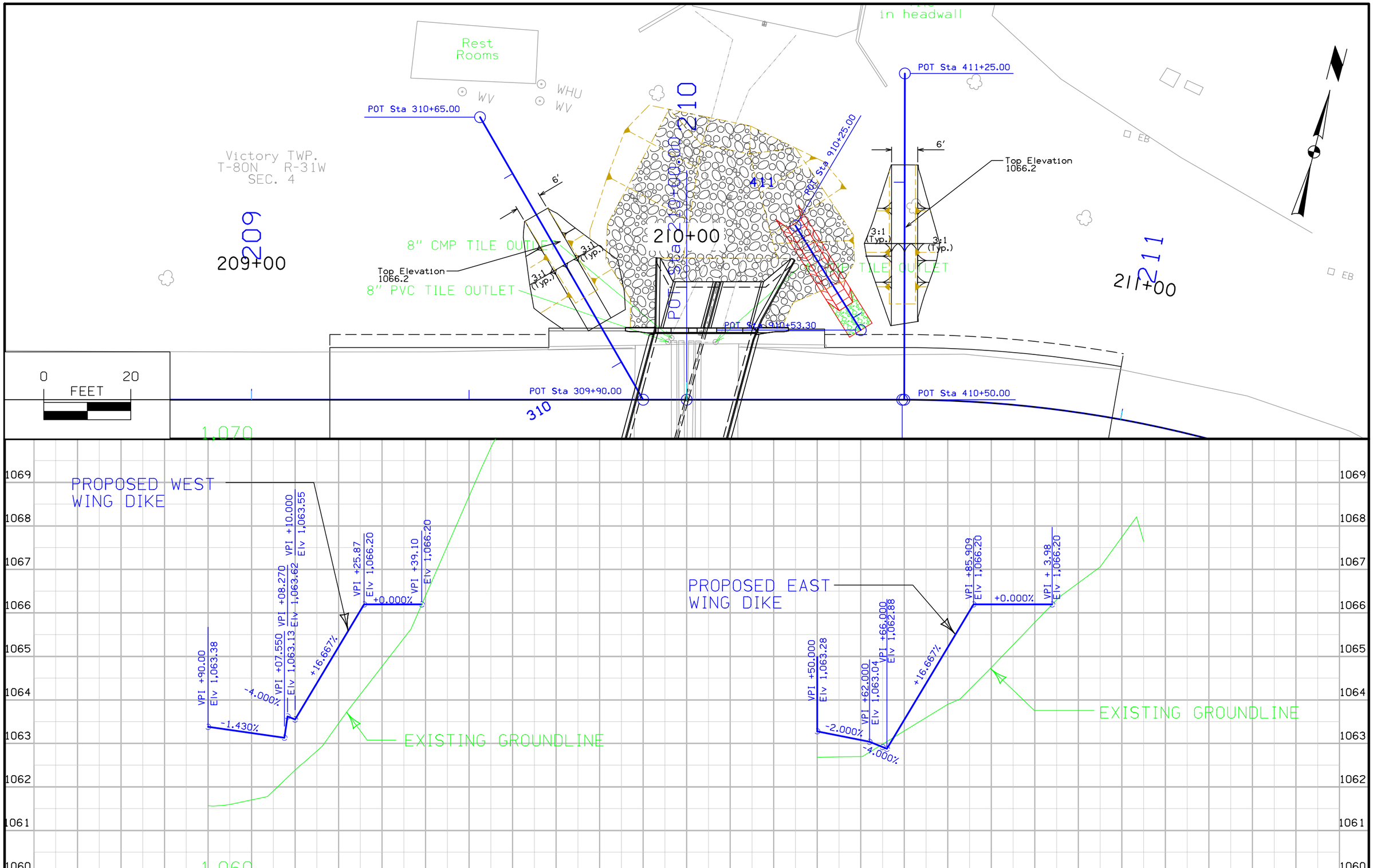

FILE NO. 31222	ENGLISH	DESIGN TEAM hgm	GUTHRIE COUNTY	PROJECT NUMBER SP-650-0(10)--7C-39	SHEET NUMBER U.1

11:56:43 AM 4/8/2015 BTH W:\Projects\3965001012\Design\3965010U1.dgn

LINE STYLE LEGEND OF CROSS SECTION SHEETS (ROAD)

- Existing Ground Line
- Proposed Template
- Proposed Topsoil Placement
- Additional Topsoil Removal
- Subrade Treatment
- Granular Shoulder
- Pavement
- Existing Pipe\RCB
- Proposed Pipe\RCB
- Proposed Dike
- All Elements Associated with Proposed Entrances

LINE STYLE LEGEND OF CROSS SECTION SHEETS (SOILS)

- TS — Topsoil (Class 10)
- TS A — Topsoil (Type A Disposal)
- TS B — Topsoil (Type B Disposal)
- TS C — Topsoil (Type C Disposal)
- CL 10 — Class 10 Materials
- SEL LO — Select Loams And Clay-Loams
- SEL SA — Select Sand
- UNS A — Unsuitable Type A Disposal
- UNS B — Unsuitable Type B Disposal
- UNS C — Unsuitable Type C Disposal
- SHALE — Shale
- WASTE — Waste
- B&W LS — Broken and Weathered Rock
- ROCK — Solid Rock
- BLDRS — Boulders

Note: All layer lines and descriptions identify layers above the line.

Note: Vertical or near vertical lines connecting soil layers at edges of cross sections are only for the purpose of calculating template quantities and do not depict soil stratification.

SYMBOL LEGEND OF CROSS SECTION SHEETS

Existing ROW — Existing Right-of-Way Limit

Proposed ROW — Proposed Right-of-Way Limit

Temporary ROW — Temporary Right-of-Way Limit

CROSS SECTION LEGEND AND SYMBOL INFORMATION SHEET

(COVERS SHEET SERIES W, X, Y, & Z)

Site 2 – Local Road

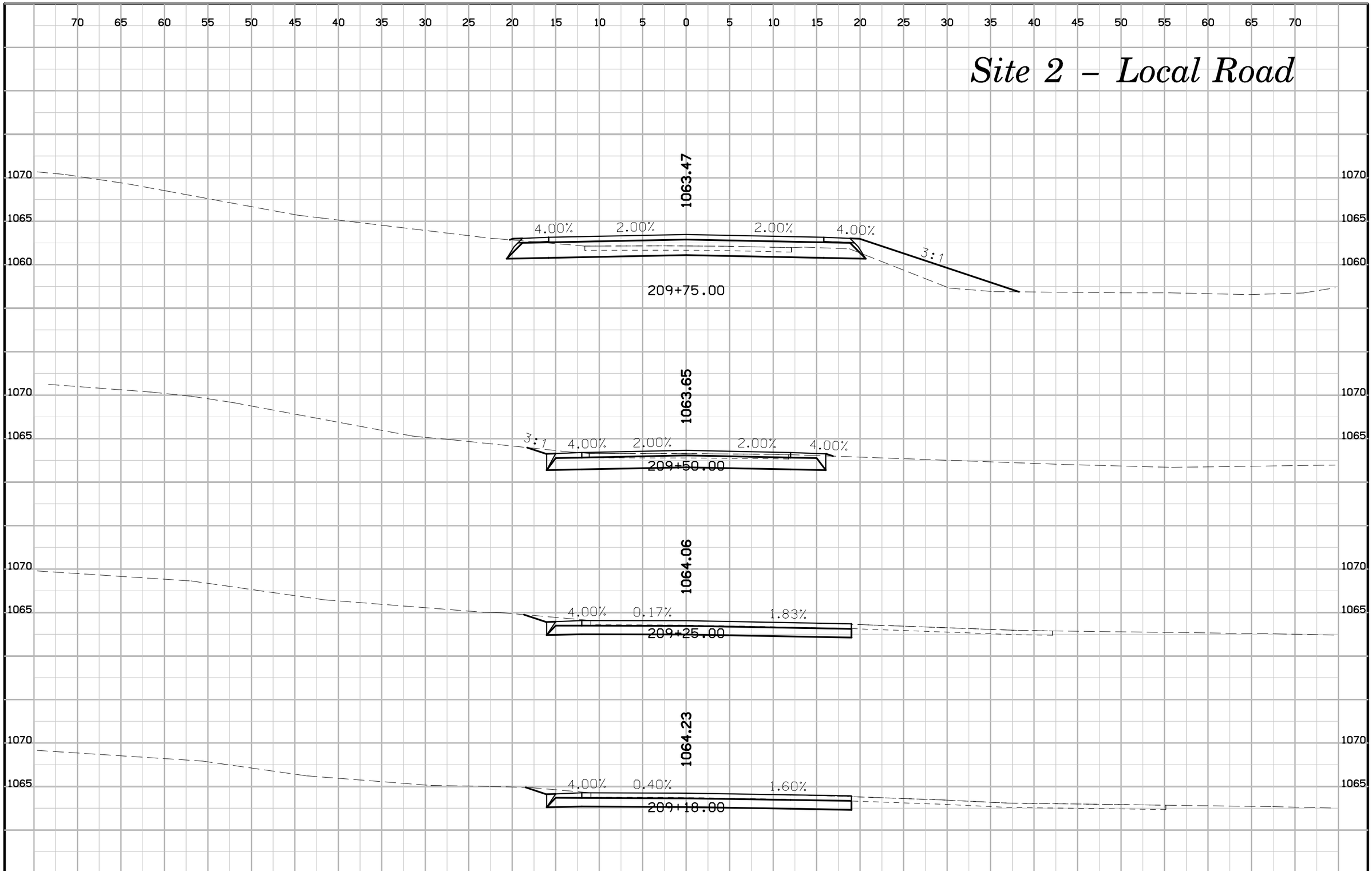

FILE NO. 31222	ENGLISH	DESIGN TEAM hgm	GUTHRIE COUNTY	PROJECT NUMBER SP-650-0(10)--7C-39	SHEET NUMBER W.2

8:23:01 AM 4/6/2015 BTH W:\Projects\3965001012\Design\3965010w1.sht

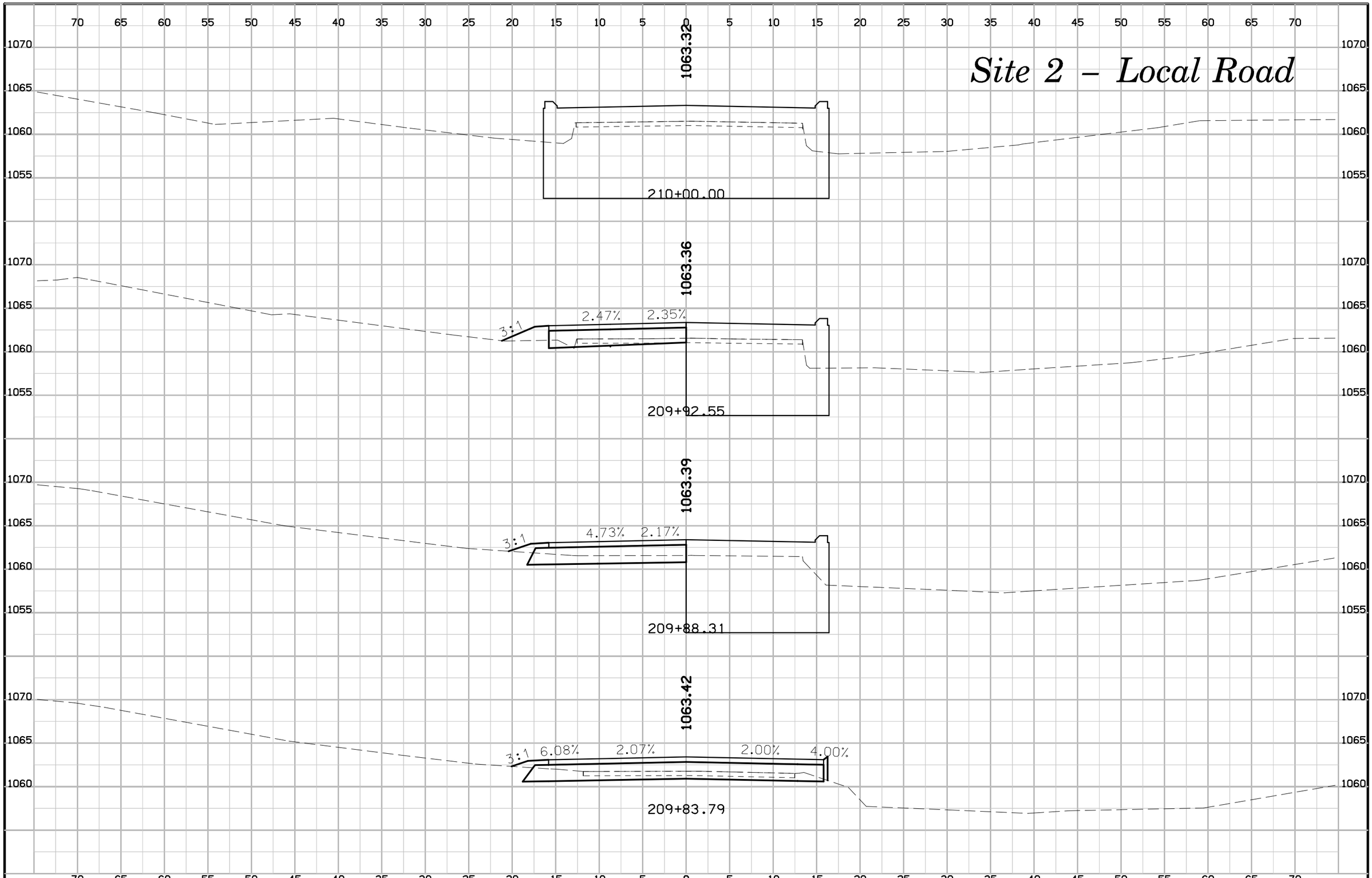

FILE NO. 31222	ENGLISH	DESIGN TEAM hgm	GUTHRIE COUNTY	PROJECT NUMBER SP-650-0(10)--7C-39	SHEET NUMBER W.3

8:23:02 AM 4/6/2015 BTH W:\Projects\3965001012\Design\3965010w1.sht

Site 2 – Local Road

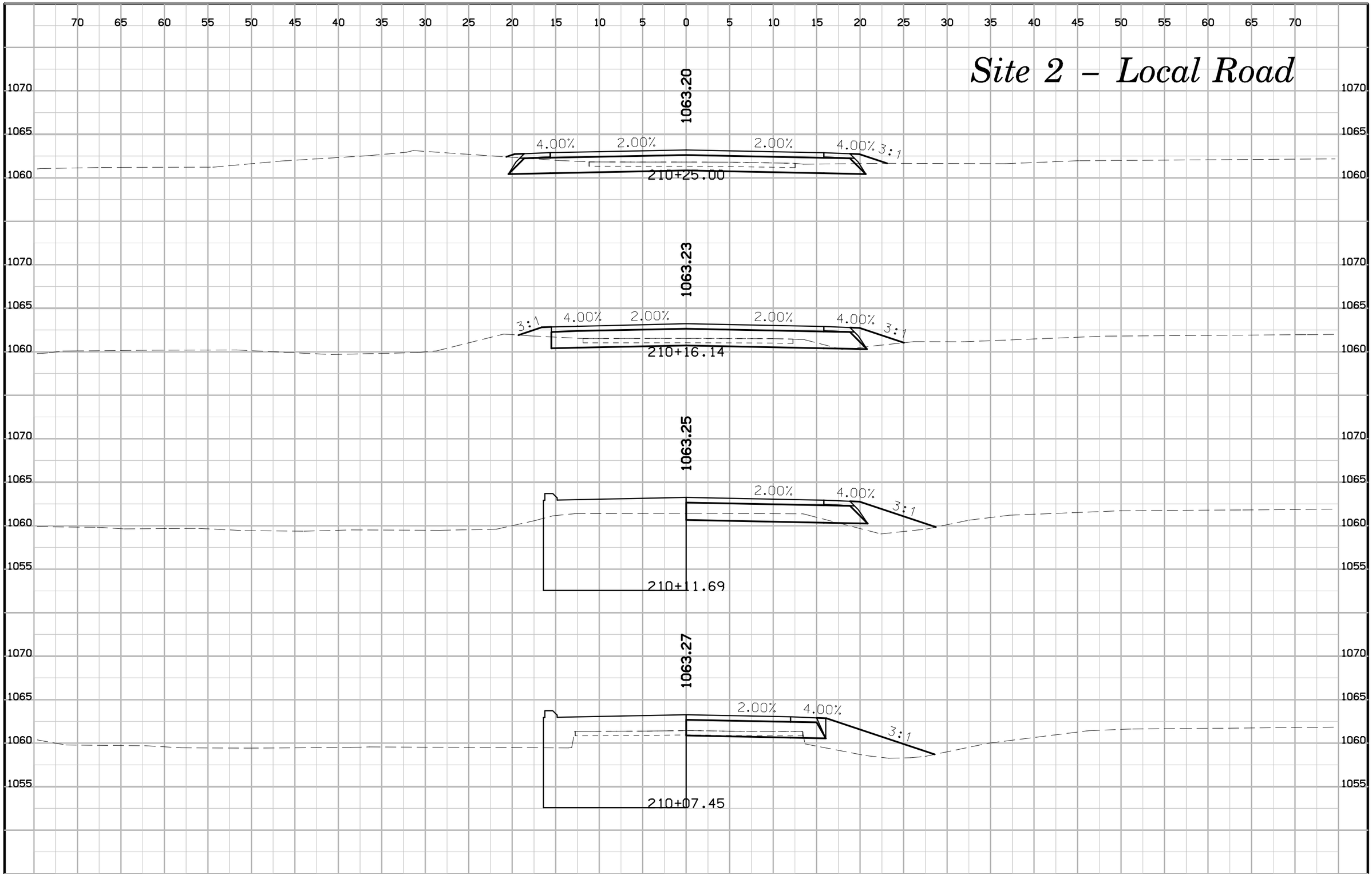

FILE NO. 31222	ENGLISH	DESIGN TEAM hgm	GUTHRIE COUNTY	PROJECT NUMBER SP-650-0(10)--7C-39	SHEET NUMBER W.4

8:23:03 AM 4/6/2015 BTH W:\Projects\3965001012\Design\3965010w1.sht

Site 2 – Local Road

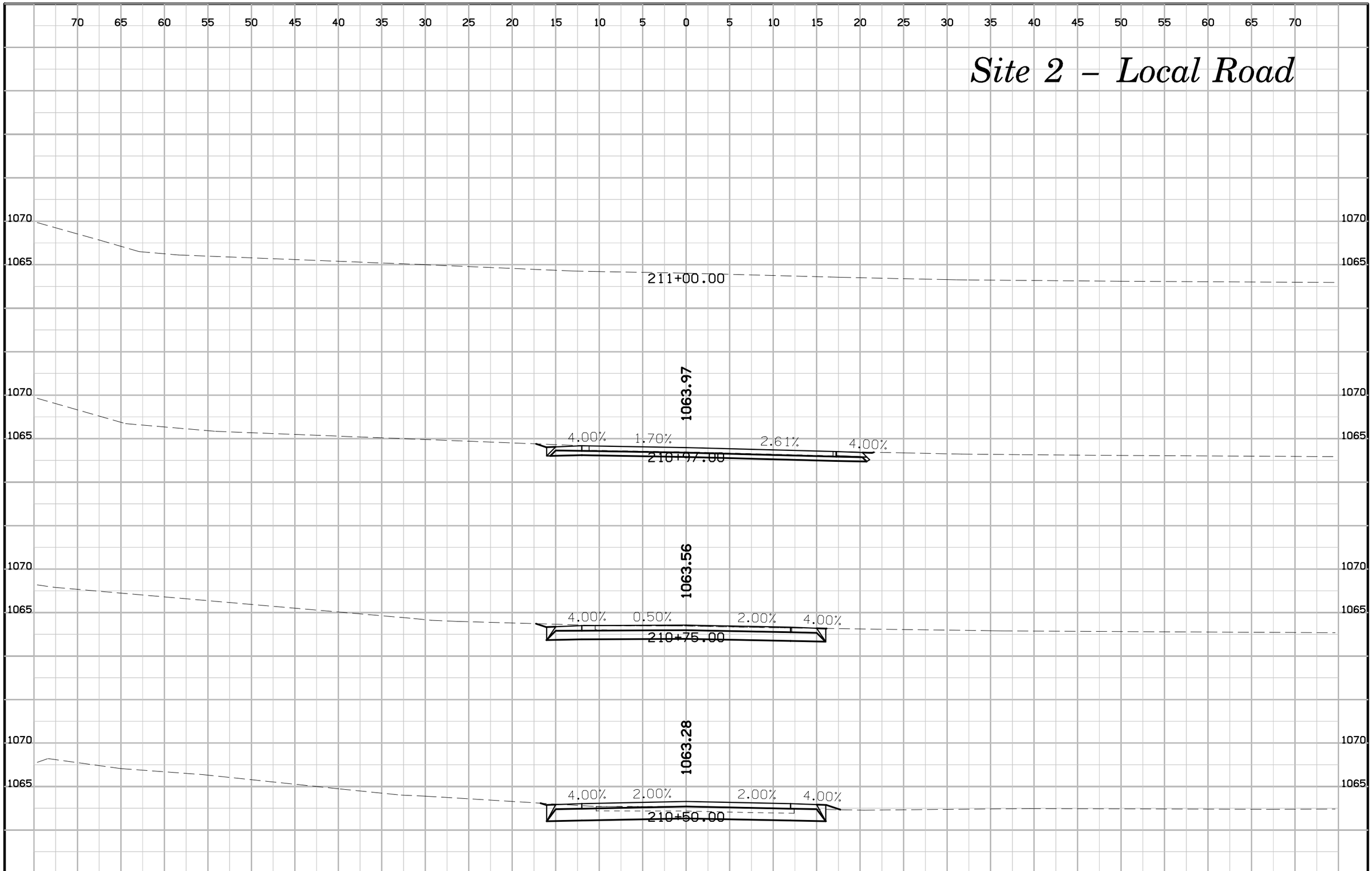

FILE NO. 31222	ENGLISH	DESIGN TEAM hgm	GUTHRIE COUNTY	PROJECT NUMBER SP-650-0(10)--7C-39	SHEET NUMBER W.5

8:23:03 AM 4/6/2015 BTH W:\Projects\3965001012\Design\3965010w1.sht