HONEY CREEK RESORT DNR NO.15-05-04-04

DOCK IMPROVEMENTS

APPANOOSE COUNTY, IOWA

PROJECT LOCATION

NORTH

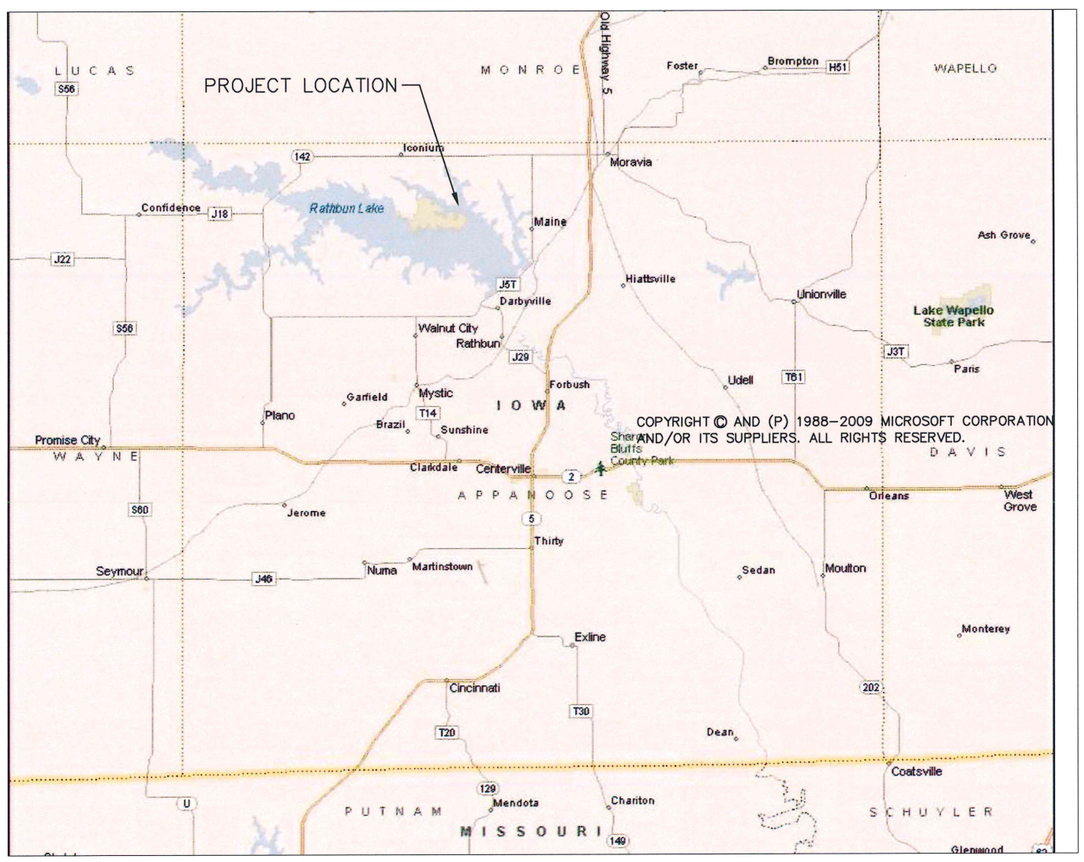

COPYRIGHT © AND (P) 1988–2009 MICROSOFT CORPORATION AND/OR ITS SUPPLIERS. ALL RIGHTS RESERVED.

HONEY CREEK RESORT DOCKS

NORTH

WIND FETCH DIAGRAM – 3.3 MILES

INDEX OF SHEETS

NO.	DESCRIPTION
G0.01	COVER SHEET
G0.02	LEGEND & ABBREVIATIONS
G0.03	GENERAL NOTES AND DESIGN CRITERIA
C1.01	EXISTING CONDITIONS PLAN
C1.02	EXISTING DOCK PLAN
C2.10	DOCK RELOCATION PLAN
C2.11	WAVE ATTENUATOR SECTIONS & DETAILS
C3.10	EXISTING DOCK REPAIR PLAN
C3.11	EXISTING DOCK REPAIR DETAILS
C3.12	EXISTING DOCK REPAIR DETAILS
C3.13	EXISTING DOCK REPAIR DETAILS

PROFESSIONAL SEALS

LICENSED PROFESSIONAL ENGINEER
DENNIS F. WAUGH
8909
IOWA

I HEREBY CERTIFY THAT THIS ENGINEERING DOCUMENT WAS PREPARED BY ME OR UNDER MY DIRECT PERSONAL SUPERVISION AND THAT I AM A DULY LICENSED PROFESSIONAL ENGINEER UNDER THE LAWS OF THE STATE OF IOWA

FOR IIW, P.C.

DENNIS F. WAUGH — DATE 3/19/15

PE 8909 — 12/31/2015

LICENSE # — RENEWAL DATE

PAGES OR SHEETS COVERED BY THIS CERTIFICATION:

INDEX THIS SHEET

IA DNR CONTACT

JASON KRUSE
FIELD ENGINEER
DISTRICT 5 ENGINEERING OFFICE
806 E. TRAIL RIDGE PLACE
INDIANOLA, IA 50125
P. (515)250–3707
E. jason.kruse@dnr.iowa.gov

IOWA ONE CALL
1-800-292-8989
www.iowaonecall.com

DNR NO. 15-05-04-04

IIW, P.C.
iiw
ARCHITECTURE
CIVIL ENGINEERING
CONSTRUCTION SERVICES
ENVIRONMENTAL ENGINEERING
LAND SURVEYING
MUNICIPAL ENGINEERING
STRUCTURAL ENGINEERING
TRANSPORTATION ENGINEERING
INTEGRITY.EXPERTISE.SOLUTIONS
www.iiwengr.com • 800.556.4491

© COPYRIGHT 2015
ALL RIGHTS RESERVED.
THESE DOCUMENTS HAVE BEEN PREPARED SPECIFICALLY FOR THIS PROJECT ONLY. NO PART OF THIS DOCUMENT MAY BE REPRODUCED OR DISTRIBUTED IN ANY FORM WITHOUT THE PERMISSION OF IIW, P.C. ALL INFORMATION IN THIS DOCUMENT IS CONSIDERED PROPERTY OF IIW, P.C.

Project Description

COVER SHEET

HONEY CREEK RESORT DNR NO.15-05-04-04
DOCK IMPROVEMENTS
APPANOOSE COUNTY, IOWA
P:\13\1280\DRAWINGS\CIVIL\13280 Z2-00 G.DWG 3/16/2015 4:03 PM MATTHEW WEIMERSKIRCH

Drawing Issue Information
Project Mgr: MAJ
Issued For Bidding: .
Drawn By: .
Issued For Construction: .

Rev	Description	Date	By
.	.	.	.
.	.	.	.
.	.	.	.
.	.	.	.
.	.	.	.
.	.	.	.

Sheet No:
G0.01
Project No: 13280

ABBREVIATIONS

Δ	CENTRAL ANGLE
A/C	AIR CONDITIONING(ER)
AC	ACRES
A.F.F.	ABOVE FINISHED FLOOR
AGG	AGGREGATE
AOH	ARROW ON HYDRANT
ARCH	ARCHITECTURAL
ASPH	ASPHALT
AVG	AVERAGE
B–B	B/C – B/C
B/C	BACK OF CURB
B/DITCH	BOTTOM OF DITCH
BFP	BACKFLOW PREVENTOR
B/L	BASE LINE
B/S	BOTTOM OF SLOPE
BLDG	BUILDING
B.M.	BENCH MARK
BOP	BEGINNING OF PROJECT
BOT	BOTTOM
BSMT	BASEMENT
BV	BUTTERFLY VALVE
C&G	CURB AND GUTTER
CATV	CABLE TELEVISION
CB	CATCH BASIN
C–C	CENTER TO CENTER
CF	CUBIC FEET
CH	CHORD
CH BRG	CHORD BEARING
CIP	CAST IRON PIPE
C–I–P	CAST–IN–PLACE
CISP	CAST IRON SOIL PIPE
CJ	CONTROL JOINT
℄ OR CL	CENTERLINE
CLR	CLEAR
CMP	CORRUGATED METAL PIPE
CMU	CONCRETE MASONRY UNIT
CO	CLEAN OUT
COL	COLUMN
COMP	COMPACTED
CONC	CONCRETE
CONN	CONNECTION
CONST	CONSTRUCTION
CONT	CONTINUOUS
COR	CORNER
CP	CONTROL POINT
CPE	CORRUGATED POLYETHYLENE PIPE
CRST	CRUSHED STONE
CSP	CORRUGATED STEEL PIPE
CTRD	CENTERED
CTR	CENTER
CULT	CULTIVATED
CV	CHECK VALVE
CY	CUBIC YARD
D	DEGREE OF CURVE
DIA (ø)	DIAMETER
DIP	DUCTILE IRON PIPE
DN	DOWN
DRWY	DRIVEWAY
DS	DOWNSPOUT
DWG(S)	DRAWING(S)
DWL(S)	DOWEL(S)
E	EAST
E'LY	EASTERLY
EA	EACH
EJ	EXPANSION JOINT
EL	ELEVATION
ELEC	ELECTRICAL
ELEV	ELEVATOR
EMBED	EMBEDMENT
ENGR	ENGINEER
ENTR	ENTRANCE
EOP	END OF PROJECT
EOR	END OF RADIUS
E/P	EDGE OF PAVEMENT
EQ	EQUAL
E/S	EDGE OF SHOULDER
ESMT	EASEMENT
EST	ESTIMATE
EX	EXISTING
EXC	EXCAVATE/EXCAVATION
EXP	EXPANSION
EXT	EXTERIOR
EXTD	EXTEND
EW	EACH WAY

FD	FLOOR DRAIN
FDN	FOUNDATION
F.E.	FIELD ENTRANCE
FES	FLARED END SECTION
F–F	FACE TO FACE
FFE	FINISH FLOOR ELEVATION
FG	FORM GRADE
FIN GR	FINISHED GRADE
FL	FLOWLINE
FLG	FLANGE
FLR	FLOOR
FM	FORCE MAIN
FND	FOUND
FT	FOOT/FEET
FTG	FOOTING
FUT	FUTURE
FV	FIELD VERIFY
G	GUTTER
GC	GENERAL CONTRACTOR
GALV	GALVANIZED
GND	GROUND
GRAN	GRANULAR
GRD	GRADE
GV	GATE VALVE
HMA	HOT MIX ASPHALT
HORIZ	HORIZONTAL
HPT	HIGH POINT
HYD	HYDRANT
ID	INSIDE DIA/INSIDE DIM
IE	INVERT ELEVATION
IMP	IMPROVEMENTS
IN	INCHES
INV	INVERT
IP	IRON PIPE
JB	JUNCTION BOX
JT	JOINT/JOINT LENGTH
K	RATE OF VERT CURVATURE
L	LENGTH OF CURVE
LAT	LATERAL
LF	LINEAL FOOT
LONG	LONGITUDINAL
LP	LIGHT POLE
LPT	LOW POINT
LT	LEFT
MAX	MAXIMUM
ME	MATCH EXISTING
MH	MANHOLE
MIN	MINIMUM
MISC	MISCELLANEOUS
MON	MONUMENT
N	NORTH
N/A	NOT APPLICABLE
NE'LY	NORTHEASTERLY
N'LY	NORTHERLY
NO/#	NUMBER
NIC	NOT IN CONTRACT
NTS	NOT TO SCALE
NW'LY	NORTHWESTERLY
OC	ON CENTER
OD	OUTSIDE DIAMETER
PC	POINT OF CURVE
PERF	PERFORATED
PI	POINT OF INTERSECTION
P/L	PROPERTY LINE
PM	PRINCIPAL MERIDIAN
POB	POINT OF BEGINNING
POC	POINT OF CURVE
POT	POINT OF TANGENT
PRC	POINT OF REVERSE CURVE
PRELIM	PRELIMINARY
PROP	PROPOSED
PRV	PRESSURE REDUCING VALVE
PT	POINT OF TANGENCY
PVC	POLYVINYL CHLORIDE
PVMT	PAVEMENT
QTY	QUANTITY

R	RADIUS
R&R	REMOVE & REPLACE
R&S	REMOVE & SALVAGE
RCB	REINFORCED CONCRETE BOX
RCP	REINFORCED CONCRETE PIPE
RD	ROAD
REBAR	REINFORCING BAR
REF	REFERENCE
REINF	REINFORCING/REINFORCED
REV	REVISION
RIM	RIM ELEVATION
ROW	RIGHT OF WAY
RP	RADIUS POINT
RS	RESILIENT SEAT
RT	RIGHT
S	SOUTH
S=	SUPERELEVATION
SAN	SANITARY
SANS	SANITARY SEWER
SB	SOIL BORING
SCH	SCHEDULE
SD	SUB DRAIN
SEC	SECTION
SE'LY	SOUTHEASTERLY
SF	SQUARE FOOT
S.F.D.	STEP FOOTING DOWN
SHT	SHEET
SIG.	SIGNAL
SIM.	SIMILAR
S'LY	SOUTHERLY
SOG	SLAB ON GRADE
SPEC	SPECIFICATION
SS	STAINLESS STEEL
ST	STREET
STA	STATION
STD	STANDARD
STL	STEEL
STM	STORM
STMS	STORM SEWER
SW'LY	SOUTHWESTERLY
SY	SQUARE YARD
T	TANGENT LENGTH
T/B	TOP OF BANK
T/DITCH	TOP OF DITCH
T/C	TOP OF CURB
T/GRAV	TOP OF GRAVEL
T/WALL	TOP OF WALL
T/P	TOP OF PAVEMENT
T/S	TOP OF SLOPE
T/SUB	TOP OF SUBGRADE
T/W	TOP OF WALK
T & B	TOP AND BOTTOM
T.O.B.	TOP OF BEAM
T.O.B.L.	TOP OF BRICK LEDGE
T.O.C.	TOP OF CONCRETE
T.O.E.F.	TOP OF EXISTING FOOTING
T.O.F.	TOP OF FOOTING
T.O.M.	TOP OF MASONRY
T.O.P.	TOP OF PIER
T.O.S.	TOP OF STEEL
TCE	TEMP CONSTRUCTION EASEMENT
TEL	TELEPHONE
TEMP	TEMPORARY
THK	THICK / THICKNESS
TWP	TOWNSHIP
TYP	TYPICAL
U	UTILITY
UAC	USE AS CONSTRUCTED
UE	UTILITY EASEMENT
UL	UNDERWRITERS LABORATORIES, INC.
ULFM	UNDERWRITERS LABORATORIES FACTORY MUTUAL
UNO	UNLESS NOTED OTHERWISE
VAR	VARIES
VC	VERTICAL CURVE
VCP	VITRIFIED CLAY PIPE
VER	VERIFY
VERT	VERTICAL
VOL	VOLUME
VPC	VERT POINT OF CURVE
VPI	VERT POINT OF INTERSECTION
VPT	VERT POINT OF TANGENCY
W	WEST
W/	WITH
W'LY	WESTERLY
WM	WATER MAIN
W/O	WITHOUT
W.P.	WORKING POINT
WD	WOOD
WSO	WATER SHUT OFF
WV	WATER VALVE
WWF	WELDED WIRE FABRIC
YD	YARD

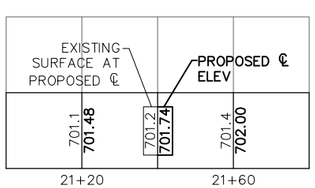

PROFILE LEGEND

LEGEND

EXISTING		PROPOSED
	PROPERTY LINE	
	EASEMENT	
	SECTION LINE	
	QUARTER SECTION LINE	
	QUARTER QUARTER SECTION LINE	
	CENTERLINE	
D	STORM SEWER	D
SD	SUB DRAIN	SD
S	SANITARY SEWER	S
FM	FORCE MAIN	FM
W	WATER LINE	W
G	GAS LINE	G
OHE	OVERHEAD ELECTRIC	OHE
E	UNDERGROUND ELECTRIC	E
OHT	OVERHEAD TELEPHONE	OHT
T	UNDERGROUND TELEPHONE	T
OHTV	OVERHEAD TELEVISION	OHTV
TV	UNDERGROUND TELEVISION	TV
FIB	FIBER OPTIC	FIB
X	WIRE FENCE	X
O	CHAINLINK FENCE	O
	WOOD FENCE	
000	CONTOUR LINE	000
	RAILROAD TRACKS	
	GUARD RAIL	
+ 0.00	SPOT ELEVATION	+ 0.00
	DIRECTION OF FLOW	
	TREE LINE	

EXISTING		PROPOSED
	CATCH BASIN	
	AREA INTAKE	
D	STORM MANHOLE	D
S	SANITARY MANHOLE	S
U	UTILITY MANHOLE	U
V	WATER VALVE MANHOLE	V
	FIRE HYDRANT	
WSO	WATER SHUT OFF	WSO
WV	WATER VALVE	WV
YD	YARD HYDRANT	YD
GV	GAS VALVE	GV
	SIGN	
	UTILITY POLE	
	UTILITY POLE WITH LIGHT	
	TRAFFIC SIGNAL POLE	
	GUY ANCHOR	
	LIGHT POLE	
	UTILITY PEDESTAL	
W	WELL	W
	MAILBOX	
	WATER LEVEL	
	BOLLARD	
	SOIL BORING	
PIV	POST INDICATOR VALVE	PIV
	DECIDUOUS TREE W/ TRUNK DIA.	
	CONIFEROUS TREE W/ TRUNK DIA.	
	SHRUB OR BUSH	

EROSION CONTROL

TEMPORARY		PERMANENT	
SF	SILT FENCE	LEVEL SPREADER	
TD	DIVERSION	SEEDING	PS
	CONSTRUCTION ENTRANCE	SODDING	S
TM	MULCHING	OUTLET PROTECTION	OP
RD	ROCK DAM	SEED, FERTILIZE, & MULCH	SFM
ST	SEDIMENT TRAP	REVETMENT SLOPE PROTECTION	RS
	INLET PROTECTION	TOPSOILING	
DC	DUST CONTROL	SOD DROP INLET PROTECTION	
	STREAM CROSSING	SEDIMENT BASIN	SB
CRS	CONSTRUCTION ROAD STABILIZATION	SURFACE ROUGHENING	
	LEVEL SPREADER	VEG STREAMBANK STABILIZATION	V
TS	SEEDING	STRUCT STREAMBANK STABILIZATION	S
		DIVERSION	PD
		CHECK DAM	CD CD
		STONE CHECK	SC SC
		SLOPE DRAINS	SD
		RIP RAP LINED CHANNELS	RR
		GRASS LINED CHANNELS	GL

SURVEY

■	FOUND REBAR
●	FOUND IRON PIPE
○	SET REBAR

IIW, P.C.
iiw
ARCHITECTURE
CIVIL ENGINEERING
CONSTRUCTION SERVICES
ENVIRONMENTAL ENGINEERING
LAND SURVEYING
MUNICIPAL ENGINEERING
STRUCTURAL ENGINEERING
TRANSPORTATION ENGINEERING
INTEGRITY.EXPERTISE.SOLUTIONS

© COPYRIGHT 2015
ALL RIGHTS RESERVED.
THESE DOCUMENTS HAVE BEEN PREPARED SPECIFICALLY FOR THIS PROJECT ONLY. NO PART OF THIS DOCUMENT MAY BE REPRODUCED OR DISTRIBUTED IN ANY FORM WITHOUT THE PERMISSION OF IIW, P.C. ALL INFORMATION IN THIS DOCUMENT IS CONSIDERED PROPERTY OF IIW, P.C.

Project Description

LEGEND & ABBREVIATIONS

HONEY CREEK RESORT DNR NO.15-05-04-04
DOCK IMPROVEMENTS
APPANOOSE COUNTY, IOWA

P:\13\280\DRAWINGS\CIVIL\13280_ZZ-00 G.DWG 3/16/2015 4:03 PM MATTHEW WEMERSKIRCH

Drawing Issue Information
Project Mgr: MAJ
Issued For Bidding: .
Drawn By: .
Issued For Construction: .

Rev	Description	Date	By
.	.	.	.
.	.	.	.
.	.	.	.
.	.	.	.
.	.	.	.
.	.	.	.

Sheet No:
G0.02
Project No: 13280

IIW, P.C.

iiw

ARCHITECTURE
CIVIL ENGINEERING
CONSTRUCTION SERVICES
ENVIRONMENTAL ENGINEERING
LAND SURVEYING
MUNICIPAL ENGINEERING
STRUCTURAL ENGINEERING
TRANSPORTATION ENGINEERING

INTEGRITY.EXPERTISE.SOLUTIONS

© COPYRIGHT 2015
ALL RIGHTS RESERVED.
THESE DOCUMENTS HAVE BEEN PREPARED SPECIFICALLY FOR THIS PROJECT ONLY. NO PART OF THIS DOCUMENT MAY BE REPRODUCED OR DISTRIBUTED IN ANY FORM WITHOUT THE PERMISSION OF IIW, P.C. ALL INFORMATION IN THIS DOCUMENT IS CONSIDERED PROPERTY OF IIW, P.C.

Project Description

EXISTING CONDITIONS PLAN

HONEY CREEK RESORT DNR NO.15-05-04-04
DOCK IMPROVEMENTS
APPANOOSE COUNTY, IOWA

P:\13\280\DRAWINGS\CIVIL\13280 ZZ-01 P.DWG 3/16/2015 4:03 PM MATTHEW WEIMERSKIRCH

Drawing Issue Information

Project Mgr: MAJ
Issued For Bidding: .
Drawn By: .
Issued For Construction: .

Rev	Description	Date	By
.	.	.	.
.	.	.	.
.	.	.	.
.	.	.	.
.	.	.	.
.	.	.	.
.	.	.	.

Sheet No:

C1.01

Project No: 13280

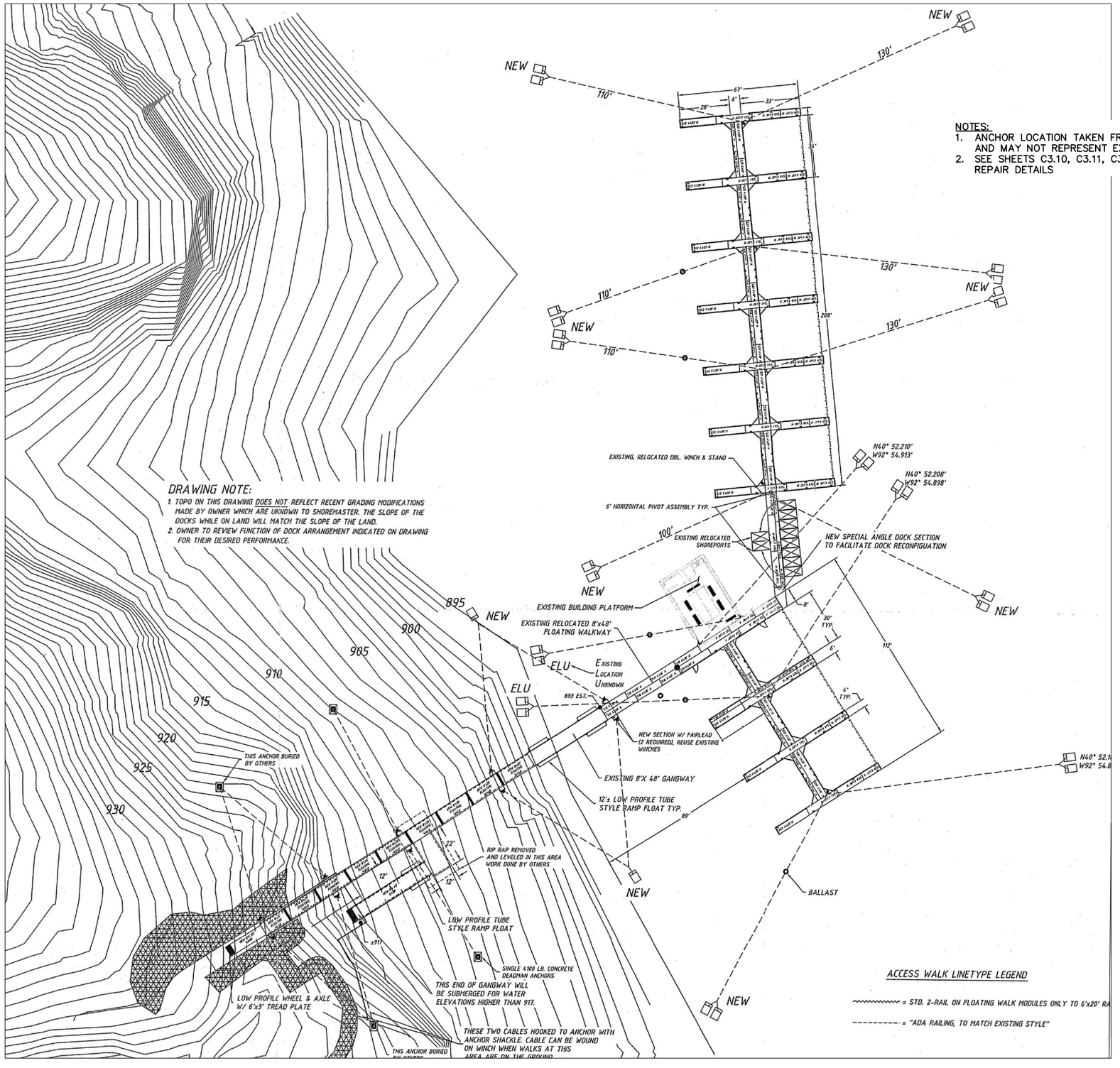

DRAWING NOTE:

1. TOPO ON THIS DRAWING DOES NOT REFLECT RECENT GRADING MODIFICATIONS MADE BY OWNER WHICH ARE UKNOWN TO SHOREMASTER. THE SLOPE OF THE DOCKS WHILE ON LAND WILL MATCH THE SLOPE OF THE LAND.
2. OWNER TO REVIEW FUNCTION OF DOCK ARRANGEMENT INDICATED ON DRAWING FOR THEIR DESIRED PERFORMANCE.

NORTH

HORIZONTAL SCALE IN FEET
0 30 60
DRAWING MAY HAVE BEEN REDUCED

NOTES:

1. ANCHOR LOCATION TAKEN FROM SHOREMASTER DRAWINGS AND MAY NOT REPRESENT EXISTING CONDITIONS
2. SEE SHEETS C3.10, C3.11, C3.12 FOR EXISTING DOCK REPAIR DETAILS

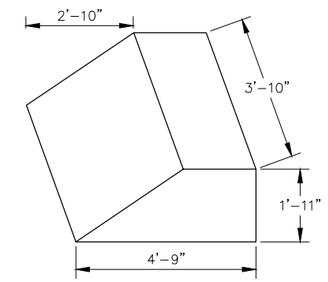

EXISTING CONCRETE BLOCK ANCHOR

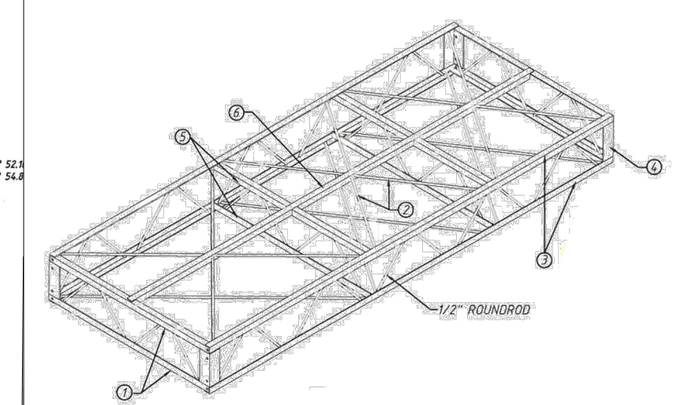

HEAVY DUTY SUBSTRUCTURE, TYPE H
6508-CH-R1 REV. 08/ 10/ 97

1. 2"X2"X$\frac{3}{16}$" ANGLE
2. $\frac{1}{2}$" ROUND ROD (CROSSED TOP AND BOTTOM)
3. 2"X2"X$\frac{3}{16}$"ANGLE
4. 3"X3"X$\frac{3}{16}$" ANGLE
5. 1-$\frac{1}{2}$" X 1-$\frac{1}{2}$"X $\frac{3}{16}$" ANGLE
6. LONGITUDINAL DECK ANGLES QUANTITY AND SIZE AS REQUIRED FOR DECKING AND DECK LOADS

IIW, P.C.
ARCHITECTURE
CIVIL ENGINEERING
CONSTRUCTION SERVICES
ENVIRONMENTAL ENGINEERING
LAND SURVEYING
MUNICIPAL ENGINEERING
STRUCTURAL ENGINEERING
TRANSPORTATION ENGINEERING
INTEGRITY.EXPERTISE.SOLUTIONS

© COPYRIGHT 2015
ALL RIGHTS RESERVED.
THESE DOCUMENTS HAVE BEEN PREPARED SPECIFICALLY FOR THIS PROJECT ONLY. NO PART OF THIS DOCUMENT MAY BE REPRODUCED OR DISTRIBUTED IN ANY FORM WITHOUT THE PERMISSION OF IIW, P.C. ALL INFORMATION IN THIS DOCUMENT IS CONSIDERED PROPERTY OF IIW, P.C.

Project Description

EXISTING DOCK PLAN

HONEY CREEK RESORT DNR NO.15-05-04-04
DOCK IMPROVEMENTS
APPANOOSE COUNTY, IOWA

P:\13\280\DRAWINGS\CIVIL\13280 ZZ-01 P.DWG 3/16/2015 4:03 PM MATTHEW WEIMERSKIRCH

Drawing Issue Information
Project Mgr: MAJ
Issued For Bidding: .
Drawn By: .
Issued For Construction: .

Rev	Description	Date	By
.	.	.	.
.	.	.	.
.	.	.	.
.	.	.	.
.	.	.	.
.	.	.	.

Sheet No:
C1.02
Project No: 13280

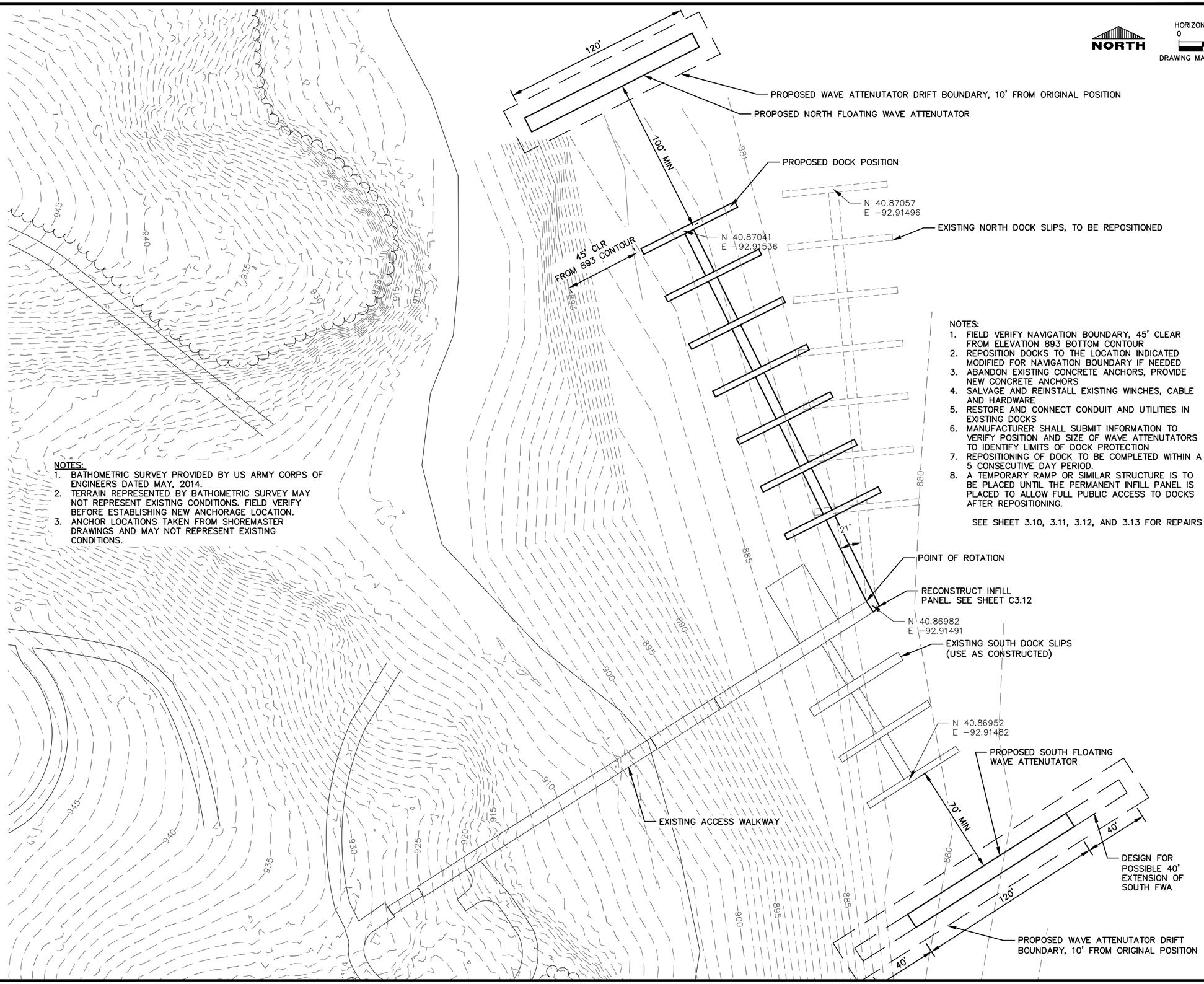

NOTES:
1. BATHOMETRIC SURVEY PROVIDED BY US ARMY CORPS OF ENGINEERS DATED MAY, 2014.
2. TERRAIN REPRESENTED BY BATHOMETRIC SURVEY MAY NOT REPRESENT EXISTING CONDITIONS. FIELD VERIFY BEFORE ESTABLISHING NEW ANCHORAGE LOCATION.
3. ANCHOR LOCATIONS TAKEN FROM SHOREMASTER DRAWINGS AND MAY NOT REPRESENT EXISTING CONDITIONS.

NOTES:
1. FIELD VERIFY NAVIGATION BOUNDARY, 45' CLEAR FROM ELEVATION 893 BOTTOM CONTOUR
2. REPOSITION DOCKS TO THE LOCATION INDICATED MODIFIED FOR NAVIGATION BOUNDARY IF NEEDED
3. ABANDON EXISTING CONCRETE ANCHORS, PROVIDE NEW CONCRETE ANCHORS
4. SALVAGE AND REINSTALL EXISTING WINCHES, CABLE AND HARDWARE
5. RESTORE AND CONNECT CONDUIT AND UTILITIES IN EXISTING DOCKS
6. MANUFACTURER SHALL SUBMIT INFORMATION TO VERIFY POSITION AND SIZE OF WAVE ATTENUTATORS TO IDENTIFY LIMITS OF DOCK PROTECTION
7. REPOSITIONING OF DOCK TO BE COMPLETED WITHIN A 5 CONSECUTIVE DAY PERIOD.
8. A TEMPORARY RAMP OR SIMILAR STRUCTURE IS TO BE PLACED UNTIL THE PERMANENT INFILL PANEL IS PLACED TO ALLOW FULL PUBLIC ACCESS TO DOCKS AFTER REPOSITIONING.

SEE SHEET 3.10, 3.11, 3.12, AND 3.13 FOR REPAIRS

IIW, P.C.
ARCHITECTURE
CIVIL ENGINEERING
CONSTRUCTION SERVICES
ENVIRONMENTAL ENGINEERING
LAND SURVEYING
MUNICIPAL ENGINEERING
STRUCTURAL ENGINEERING
TRANSPORTATION ENGINEERING
INTEGRITY.EXPERTISE.SOLUTIONS

© COPYRIGHT 2015
ALL RIGHTS RESERVED.
THESE DOCUMENTS HAVE BEEN PREPARED SPECIFICALLY FOR THIS PROJECT ONLY. NO PART OF THIS DOCUMENT MAY BE REPRODUCED OR DISTRIBUTED IN ANY FORM WITHOUT THE PERMISSION OF IIW, P.C. ALL INFORMATION IN THIS DOCUMENT IS CONSIDERED PROPERTY OF IIW, P.C.

Project Description

DOCK RELOCATION PLAN

HONEY CREEK RESORT DNR NO.15-05-04-04
DOCK IMPROVEMENTS
APPANOOSE COUNTY, IOWA

P:\13\280\DRAWINGS\DWG\13280 ZZ-02 P.DWG 3/16/2015 4:03 PM MATTHEW WEMERSKIRCH

Drawing Issue Information
Project Mgr: MAJ
Issued For Bidding: .
Drawn By: .
Issued For Construction: .

Rev	Description	Date	By
.	.	.	.
.	.	.	.
.	.	.	.
.	.	.	.
.	.	.	.
.	.	.	.

Sheet No:
C2.10
Project No: 13280

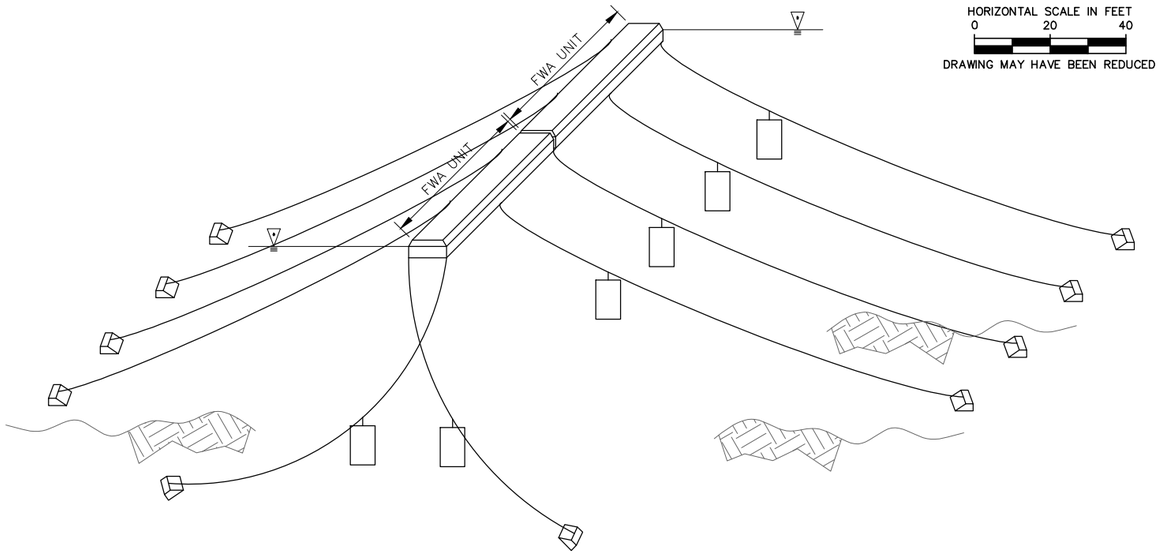

HORIZONTAL SCALE IN FEET
0 20 40
DRAWING MAY HAVE BEEN REDUCED

DNR417: BOAT NAVIGATION ARROW W/BLUE 12X12

4 REQUIRED PER FWA

20x14 WITH INTERNATIONAL
ORANGE BORDER AND BLACK TEXT
4 REQUIRED PER FWA

NOTES:

1. FLOATING WAVE ATTENUATOR (FWA) TO FUNCTION IN FULL RANGE OF WATER LEVEL CHANGES FROM ELEVATION 902 TO ELEVATION 927 WITHOUT OPERATOR INTERVENTION.
2. ANCHOR FWA WITH CONCRETE ANCHORS POSITIONED TO ALLOW FULL RANGE OF MOTION AND ADEQUATELY RESIST DESIGN FORCES IMPOSED THROUGH FULL RANGE OF MOTION.
3. ANCHOR RODES MAY BE ANY COMBINATION OF CABLE (STEEL OR MARINE SYNTHETIC) AND CHAIN.
4. PROVIDE SEPARATE CONNECTION TO RODE BALLAST FOR REPOSITIONING ADJUSTMENT WITH A SLIDING CONNECTION TO BALLAST.
5. PROVIDE DESIGN CALCULATIONS FOR APPROVAL SHOWING COMPLIANCE WITH THE DESIGN CRITERIA PRIOR TO FABRICATION.
6. SIGNAGE AND LIGHTS TO MEET REQUIREMENTS OF IOWA ADMINISTRATIVE CODE CHAPTER 41.
7. BID ITEM FLOATING WAVE ATTENUATOR, LINEAL FEET.
8. SIGNING AND LIGHTING – SEE BID SCHEDULE.

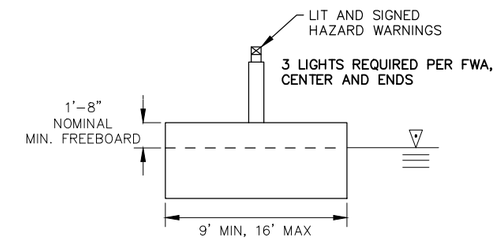

FLOATING WAVE ATTENUATOR (FWA)
WAVE WALL AND ANCHORAGE NOT SHOWN

HORIZONTAL SCALE IN FEET
0 10 20
DRAWING MAY HAVE BEEN REDUCED

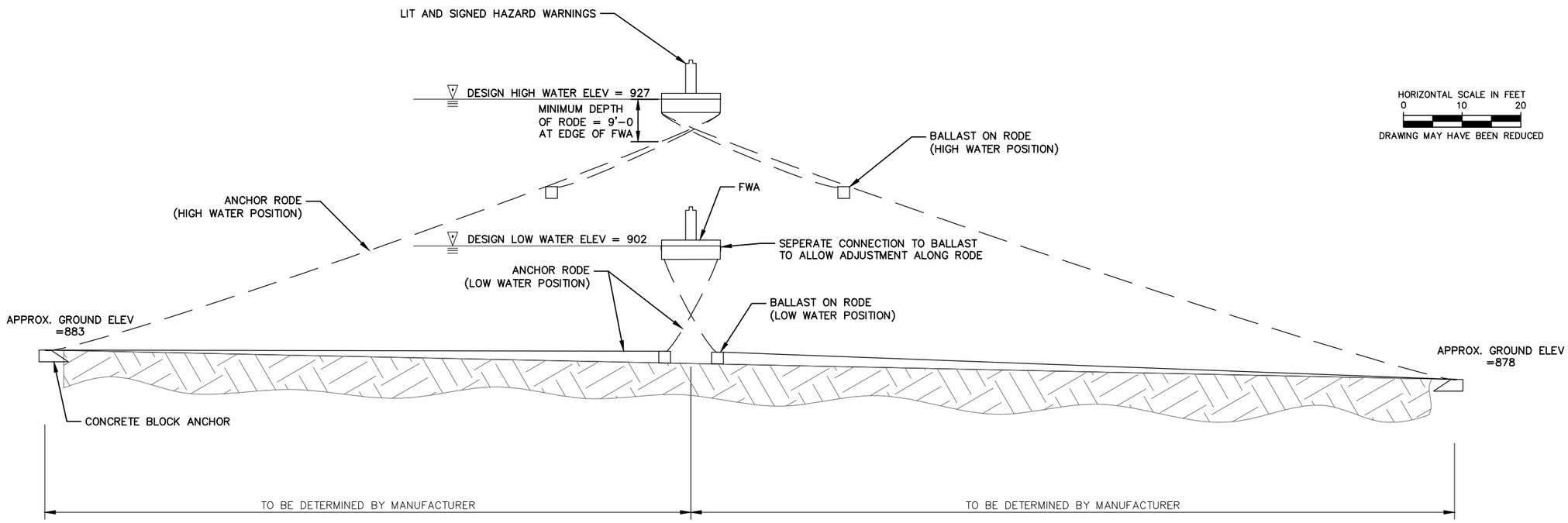

IIW, P.C.
iiw
ARCHITECTURE
CIVIL ENGINEERING
CONSTRUCTION SERVICES
ENVIRONMENTAL ENGINEERING
LAND SURVEYING
MUNICIPAL ENGINEERING
STRUCTURAL ENGINEERING
TRANSPORTATION ENGINEERING
INTEGRITY.EXPERTISE.SOLUTIONS

© COPYRIGHT 2015
ALL RIGHTS RESERVED.
THESE DOCUMENTS HAVE BEEN PREPARED SPECIFICALLY FOR THIS PROJECT ONLY. NO PART OF THIS DOCUMENT MAY BE REPRODUCED OR DISTRIBUTED IN ANY FORM WITHOUT THE PERMISSION OF IIW, P.C. ALL INFORMATION IN THIS DOCUMENT IS CONSIDERED PROPERTY OF IIW, P.C.

Project Description

WAVE ATTENUATOR SECTIONS & DETAILS

HONEY CREEK RESORT DNR NO.15-05-04-04
DOCK IMPROVEMENTS
APPANOOSE COUNTY, IOWA

P:\13\280\DRAWINGS\CIVIL\13280 ZZ-02 P.DWG 3/16/2015 4:03 PM MATTHEW WEMERSKIRCH

Drawing Issue Information

Project Mgr: MAJ
Issued For Bidding: .
Drawn By: .
Issued For Construction: .

Rev	Description	Date	By
.	.	.	.
.	.	.	.
.	.	.	.
.	.	.	.
.	.	.	.
.	.	.	.

Sheet No:

C2.11

Project No: 13280

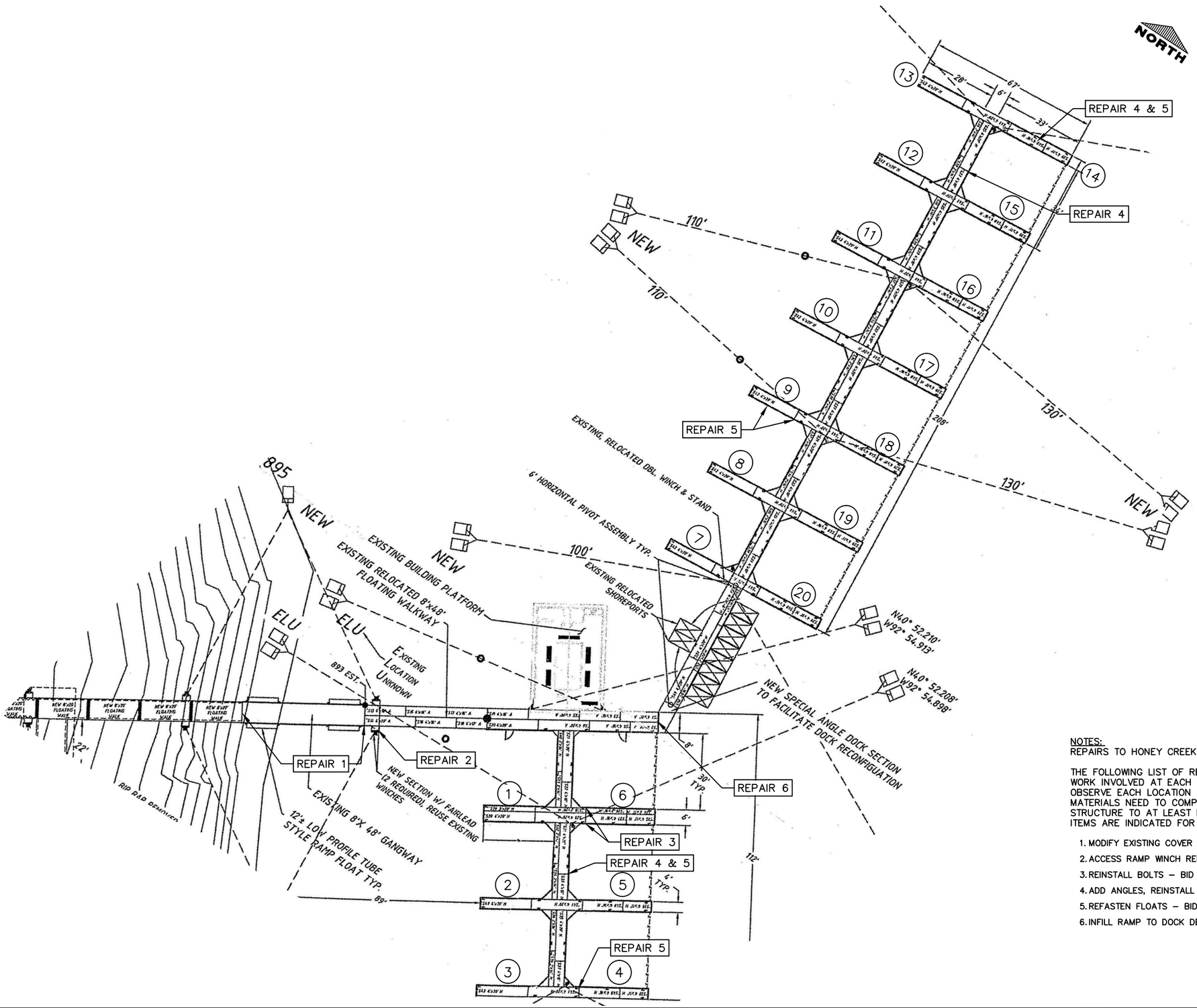

NOTES:
REPAIRS TO HONEY CREEK RESORT DOCKS

THE FOLLOWING LIST OF REPAIRS IS A GENERAL DESCRIPTION OF THE WORK INVOLVED AT EACH LOCATION. THE CONTRACTOR SHALL OBSERVE EACH LOCATION AND DETERMINE THE MEANS, METHODS, AND MATERIALS NEED TO COMPLETE A REPAIR THAT RESTORES THE STRUCTURE TO AT LEAST ITS ORIGINAL CONDITION AND STRENGTH. BID ITEMS ARE INDICATED FOR EACH REPAIR DESCRIPTION.

1. MODIFY EXISTING COVER PLATES – BID ITEM DOCK REPAIR 1
2. ACCESS RAMP WINCH REPAIR – BID ITEM DOCK REPAIR 2
3. REINSTALL BOLTS – BID ITEM DOCK REPAIR 3
4. ADD ANGLES, REINSTALL BOLTS – BID ITEM DOCK REPAIR 4
5. REFASTEN FLOATS – BID ITEM DOCK REPAIR 5
6. INFILL RAMP TO DOCK DECK – BID ITEM DOCK REPAIR 6

IIW, P.C.
iiw
ARCHITECTURE
CIVIL ENGINEERING
CONSTRUCTION SERVICES
ENVIRONMENTAL ENGINEERING
LAND SURVEYING
MUNICIPAL ENGINEERING
STRUCTURAL ENGINEERING
TRANSPORTATION ENGINEERING
INTEGRITY.EXPERTISE.SOLUTIONS

© COPYRIGHT 2015
ALL RIGHTS RESERVED.
THESE DOCUMENTS HAVE BEEN PREPARED SPECIFICALLY FOR THIS PROJECT ONLY. NO PART OF THIS DOCUMENT MAY BE REPRODUCED OR DISTRIBUTED IN ANY FORM WITHOUT THE PERMISSION OF IIW, P.C. ALL INFORMATION IN THIS DOCUMENT IS CONSIDERED PROPERTY OF IIW, P.C.

Project Description
EXISTING DOCK REPAIR PLAN
HONEY CREEK RESORT DNR NO.15-05-04-04
DOCK IMPROVEMENTS
APPANOOSE COUNTY, IOWA
P:\13\280\DRAWINGS\CIVIL\13280 ZZ-01 P.DWG 3/16/2015 4:04 PM MATTHEW WEIMERSKIRCH

Drawing Issue Information
Project Mgr: MAJ
Issued For Bidding: .
Drawn By: .
Issued For Construction: .

Rev	Description	Date	By
.	.	.	.
.	.	.	.
.	.	.	.
.	.	.	.
.	.	.	.
.	.	.	.

Sheet No:
C3.10
Project No: 13280

REMOVE EXISTING COVER PLATE AND BEND AT THE LOCATION OF THE RUBBING TO PREVENT CONTINUED RUBBING ON PLATE AS INDICATED IN PHOTO. CLEAN AREAS WHERE GALVANIZING IS DAMAGED OR MISSING AND REPAIR GALVANIZING TO COMPLY WITH ASTM A 780. BEND PLATE SUCH THAT THE END OVER THE DOCK IS APPROXIMATELY PARALLEL TO WALKWAY SURFACE(APPROXIMATELY 2"–3"). GANGWAY COVER PLATE AT SHORELINE SHOWN IN PHOTO

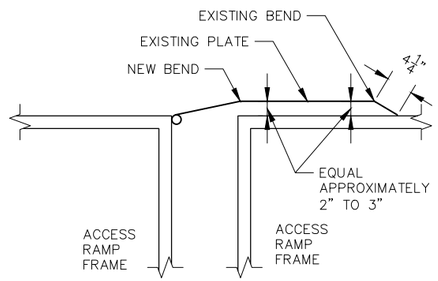

REPAIR 1 – GANGWAY COVER PLATE

2 LOCATIONS

REMOVE ACCESS RAMP WINCH FRAME. CLEAN AREAS WHERE GALVANIZING IS DAMAGED OR MISSING AND REPAIR GALVANIZING TO COMPLY WITH ASTM A 780, AND WELD RAMP TRUSS FRAME. REPLACE FRAME AND LIGHT SUPPLIED BY DNR.

REPAIR 2 – ACCESS RAMP WINCH FRAME

1 LOCATION

REPLACE MISSING BOLT WITH SELF–LOCKING HEAD TYPE TO MATCH REMAINING BOLT SIZE AND TYPE. BOLTED CONNECTION AT FINGER 6 SHOWN IN PHOTO. PROVIDE AND INSTALL NEW BOLTS, SIZES AND TYPES AVAILABLE FROM DNR. CLEAN AREAS WHERE GALVANIZING IS DAMAGED OR MISSING AND REPAIR GALVANIZING TO COMPLY WITH ASTM A 780.

REPAIR 3 – REINSTALL BOLTS

2 LOCATIONS

IIW, P.C.
iiw
ARCHITECTURE
CIVIL ENGINEERING
CONSTRUCTION SERVICES
ENVIRONMENTAL ENGINEERING
LAND SURVEYING
MUNICIPAL ENGINEERING
STRUCTURAL ENGINEERING
TRANSPORTATION ENGINEERING
INTEGRITY.EXPERTISE.SOLUTIONS

© COPYRIGHT 2015
ALL RIGHTS RESERVED.
THESE DOCUMENTS HAVE BEEN PREPARED SPECIFICALLY FOR THIS PROJECT ONLY. NO PART OF THIS DOCUMENT MAY BE REPRODUCED OR DISTRIBUTED IN ANY FORM WITHOUT THE PERMISSION OF IIW, P.C. ALL INFORMATION IN THIS DOCUMENT IS CONSIDERED PROPERTY OF IIW, P.C.

Project Description

EXISTING DOCK REPAIR DETAILS

HONEY CREEK RESORT DNR NO.15-05-04-04
DOCK IMPROVEMENTS
APPANOOSE COUNTY, IOWA

P:\13\280\DRAWINGS\CIVIL\13280 ZZ-01 F.DWG 3/16/2015 4:04 PM MATTHEW WEIMERSKIRCH

Drawing Issue Information

Project Mgr: MAJ
Issued For Bidding: .
Drawn By: .
Issued For Construction: .

Rev	Description	Date	By
.	.	.	.
.	.	.	.
.	.	.	.
.	.	.	.
.	.	.	.
.	.	.	.

Sheet No:
C3.11
Project No: 13280

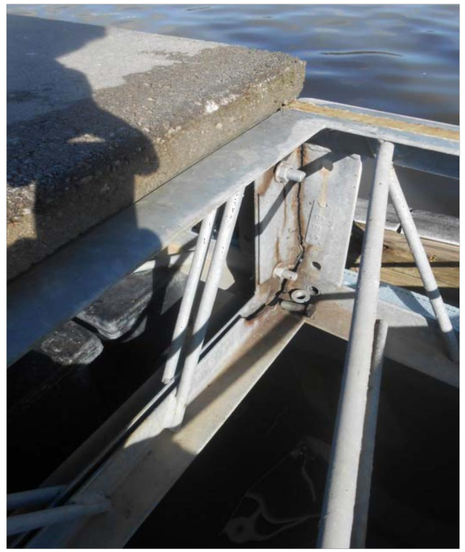

RECONNECT BY PLACING GALVANIZED STEEL ANGLES ON SIDE OF THE CONNECTION AND THROUGH BOLTING THROUGH EXISTING HOLES. SEE DETAIL C3.13. DAMAGE BETWEEN FINGER 5 AND 6 SHOWN IN PHOTO.

REPAIR 4 – ADD 5x3x⅜ ANGLES, REINSTALL BOLTS
SEE SHEET C3.13
3 LOCATIONS

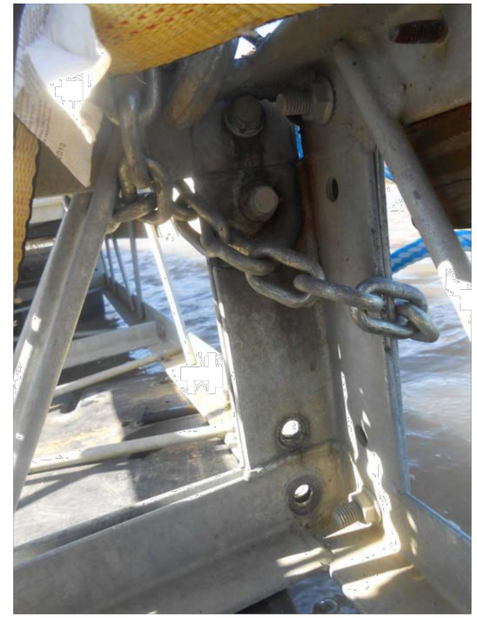

RECONNECT BY PLACING GALVANIZED ANGLES ON SIDE OF THE CONNECTION AND THROUGH BOLTING THROUGH EXISTING HOLES. SEE DETAIL C3.13.

DAMAGE AT FINGER 14 – SHOWN IN PHOTO

REPAIR 4 – ADD 5x3x⅜ ANGLES, REINSTALL BOLTS
SEE SHEET C3.13

Loosen, reposition and refasten existing floats at locations as indicated on the plan. Inspect entire dock structure with DNR personnel to identify additional floats to be refastened. Float BTWN Finger 5 and 6 shown in photo.

Existing float from ShoreMaster literature

CONTRACTOR TO SUPPLY FASTENERS TO MATCH EXISTING. CONTACT DNR FOR SIZE, TYPE, AND FINISH.

REPAIR 5 – REFASTEN FLOATS

5 LOCATIONS

REPAIR 6 – INFILL RAMP TO DOCK DECK

1 LOCATION

PROVIDE TEMPORARY STRUCTURE TO MAINTAIN ACCESS UNTIL INFILL IS COMPLETED.

REPLACE ADDITIONAL CONCRETE DECK AT INTERSECTION WITH THE DOCKS AND ACCESS RAMP DUE TO CHANGE IN ANGLE AFTER REPOSITIONING. FIELD MEASURE OPENING AND SUBMIT SHOP DRAWING OF WELDED ∠3x3¼ FRAME TO FIT OPENING FOR APPROVAL. BOLT NEW WELDED FRAME ALONG PERIMETER OF OPENING. ADDITIONAL MEMBERS MAY BE NECESSARY TO SUPPORT CONCRETE PANEL DECK. CUT DECK PANELS PROVIDED BY DNR TO FIT NEW WELDED FRAME.

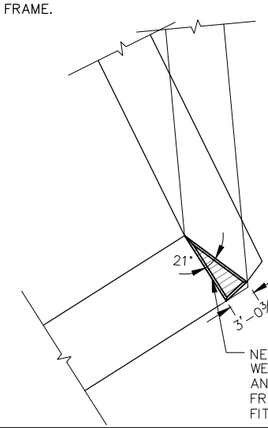

IIW, P.C.
iiw
ARCHITECTURE
CIVIL ENGINEERING
CONSTRUCTION SERVICES
ENVIRONMENTAL ENGINEERING
LAND SURVEYING
MUNICIPAL ENGINEERING
STRUCTURAL ENGINEERING
TRANSPORTATION ENGINEERING
INTEGRITY.EXPERTISE.SOLUTIONS

© COPYRIGHT 2015
ALL RIGHTS RESERVED.
THESE DOCUMENTS HAVE BEEN PREPARED SPECIFICALLY FOR THIS PROJECT ONLY. NO PART OF THIS DOCUMENT MAY BE REPRODUCED OR DISTRIBUTED IN ANY FORM WITHOUT THE PERMISSION OF IIW, P.C. ALL INFORMATION IN THIS DOCUMENT IS CONSIDERED PROPERTY OF IIW, P.C.

Project Description
EXISTING DOCK REPAIR DETAILS

HONEY CREEK RESORT DNR NO.15-05-04-04
DOCK IMPROVEMENTS
APPANOOSE COUNTY, IOWA

P:\13\280\DRAWINGS\CIVIL\13280_Z2-01.DWG 3/16/2015 4:04 PM MATTHEW WEIMERSKIRCH

Drawing Issue Information
Project Mgr: MAJ
Issued For Bidding: .
Drawn By: .
Issued For Construction: .

Rev	Description	Date	By
.	.	.	.
.	.	.	.
.	.	.	.
.	.	.	.
.	.	.	.
.	.	.	.

Sheet No:
C3.12
Project No: 13280

NOTES:
1. FIELD MEASURE EXISTING TRUSS FRAMES TO VERIFY DIMENSIONS.
2. OVERSIZE HOLES TO ALLOW FIT–UP.
3. FABRICATE MOCKUP SAMPLE TO VERIFY DIMENSIONS, HOLE SIZES, AND CLEARANCES PRIOR TO GALVANIZING. INSTALL MOCKUP TO VERIFY FIT–UP.
4. HOT–DIP GALVANIZE AFTER FABRICATION

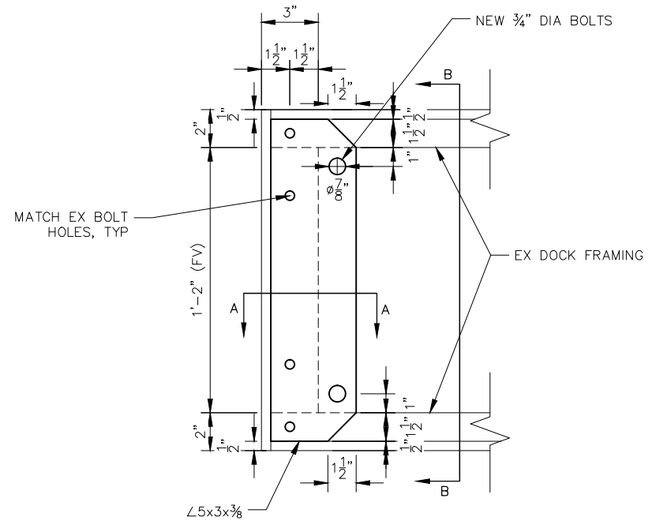

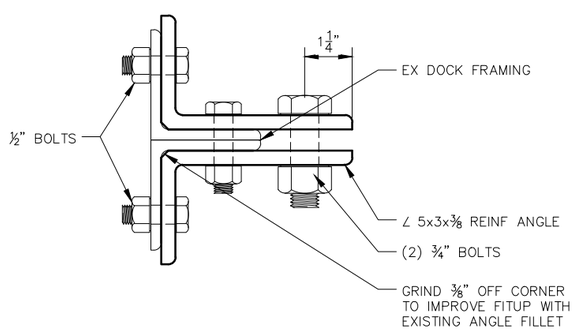

SECTION A–A

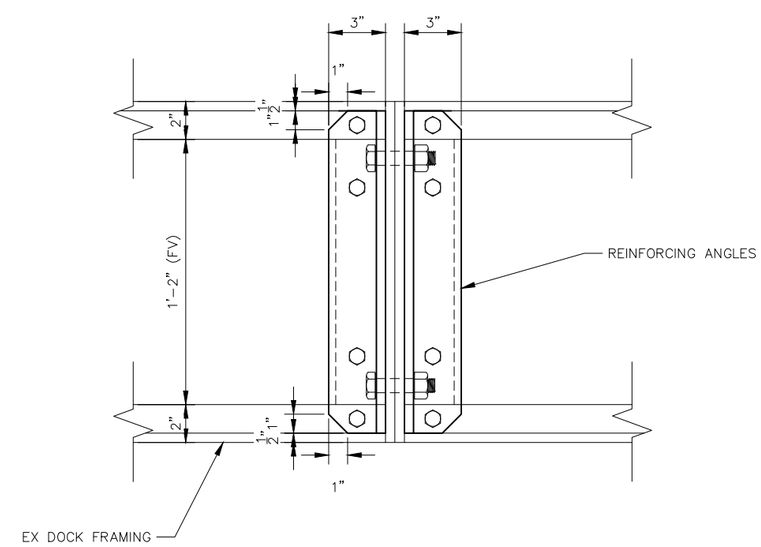

SECTION B–B

REPAIR 4

IIW, P.C.

ARCHITECTURE
CIVIL ENGINEERING
CONSTRUCTION SERVICES
ENVIRONMENTAL ENGINEERING
LAND SURVEYING
MUNICIPAL ENGINEERING
STRUCTURAL ENGINEERING
TRANSPORTATION ENGINEERING

INTEGRITY.EXPERTISE.SOLUTIONS

© COPYRIGHT 2015
ALL RIGHTS RESERVED.
THESE DOCUMENTS HAVE BEEN PREPARED SPECIFICALLY FOR THIS PROJECT ONLY. NO PART OF THIS DOCUMENT MAY BE REPRODUCED OR DISTRIBUTED IN ANY FORM WITHOUT THE PERMISSION OF IIW, P.C. ALL INFORMATION IN THIS DOCUMENT IS CONSIDERED PROPERTY OF IIW, P.C.

Project Description

EXISTING DOCK REPAIR DETAILS

HONEY CREEK RESORT DNR NO.15-05-04-04
DOCK IMPROVEMENTS
APPANOOSE COUNTY, IOWA

P:\13\280\DRAWINGS\CIVIL\13280 T2-01 F.DWG 3/16/2015 4:04 PM MATTHEW WEIMERSKIRCH

Drawing Issue Information
Project Mgr: MAJ
Issued For Bidding: .
Drawn By: .
Issued For Construction: .

Rev	Description	Date	By
.	.	.	.
.	.	.	.
.	.	.	.
.	.	.	.
.	.	.	.
.	.	.	.

Sheet No:
C3.13
Project No: 13280