IOWA DEPARTMENT OF NATURAL RESOURCES

CONSTRUCTION DOCUMENTS FOR GEODE STATE PARK SEDIMENT PONDS

HENRY COUNTY, IOWA

PROJECT # 16-06-44-02

LICENSED PROFESSIONAL ENGINEER
HEATH B. DELZELL
21074
IOWA

I HEREBY CERTIFY THAT THIS ENGINEERING DOCUMENT WAS PREPARED UNDER MY SUPERVISION AND THAT ENGINEERING DECISIONS WITH REGARD TO THE DESIGN WERE MADE BY ME UNDER THE LAWS OF THE STATE OF IOWA.

SIGNATURE DATE

HEATH B. DELZELL
PRINTED OR TYPED NAME

MY LICENCE RENEWAL DATE IS DECEMBER 31, 20 ____
PAGES COVERED BY THIS SEAL: _____

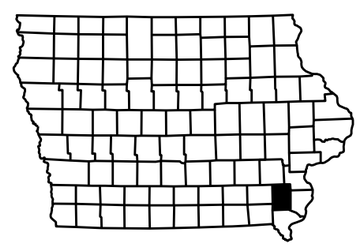

IOWA ONE CALL

DIRECTORY

PROJECT MANAGER		CONSTRUCTION INSPECTOR	
COMPANY	IOWA DEPARTMENT OF NATURAL RESOURCES	COMPANY	IOWA DEPARTMENT OF NATURAL RESOURCES
ADDRESS	502 EAST 9TH STREET	ADDRESS	
CITY,STATE,ZIP	DES MOINES, IA, 50319	CITY,STATE,ZIP	
CONTACT	MIKE HAMEED	CONTACT	MIKE DUFOE
TELEPHONE	515-725-8467	TELEPHONE	515-985-9196
FAX		FAX	
EMAIL	mike.hameed@dnr.iowa.gov	EMAIL	michael.dufoe@dnr.iowa.gov

PROJECT DESCRIPTION

THIS PROJECT CONSISTS OF CONSTRUCTING FOUR NEW AND REPAIRING TWO EXISTING SEDIMENTATION BASINS IN LAKE GEODE WATERSHED.

AUTHORIZATION TO BID

AUTHORIZATION - PARKS | WILDLIFE | FISHERIES | LAW ENFORCEMENT | FORESTRY DATE

ENGINEERING BUREAU CHIEF DATE

SHEET INDEX

1	COVER SHEET
2	PROJECT LOCATION MAP
3	TRASH RACK DETAILS -1
4	TRASH RACK DETAILS -2
5	QUANTITIES AND GENERAL INFORMATION
6	OVERALL SITE PLAN
7	SITE G, PLAN & PROFILE
8	SITE H, PLAN & PROFILE
9	SIKE K, PLAN & PROFILE
10	SITE K, CROSS SECTION
11	SITE K, DIAPHRAGM CROSS SECTIONS
12	SITE OP, PLAN & PROFILE
13	SITE OP, CROSS SECTION
14	SITE OP, DIAPHRAGM CROSS SECTIONS
15	SITE Q, PLAN & PROFILE
16	SITE Q, CROSS SECTION
17	SITE Q, DIAPHRAGM CROSS SECTIONS
18	SITE R, PLAN & PROFILE

CONSULTANT:

IOWA DEPARTMENT OF NATURAL RESOURCES
ENGINEERING SERVICES - WALLACE BUILDING
502 E. 9TH ST., DES MOINES, IA 50319-0034

COVER SHEET
SEDIMENT PONDS FOR:
GEODE STATE PARK
HENRY COUNTY

NO.	BY	DATE	REVISION

DRAWN BY: MH
PROJECT NUMBER: 16-06-44-02
CHK'D BY: HD
DATE: 12/28/2015
SHEET No: 1

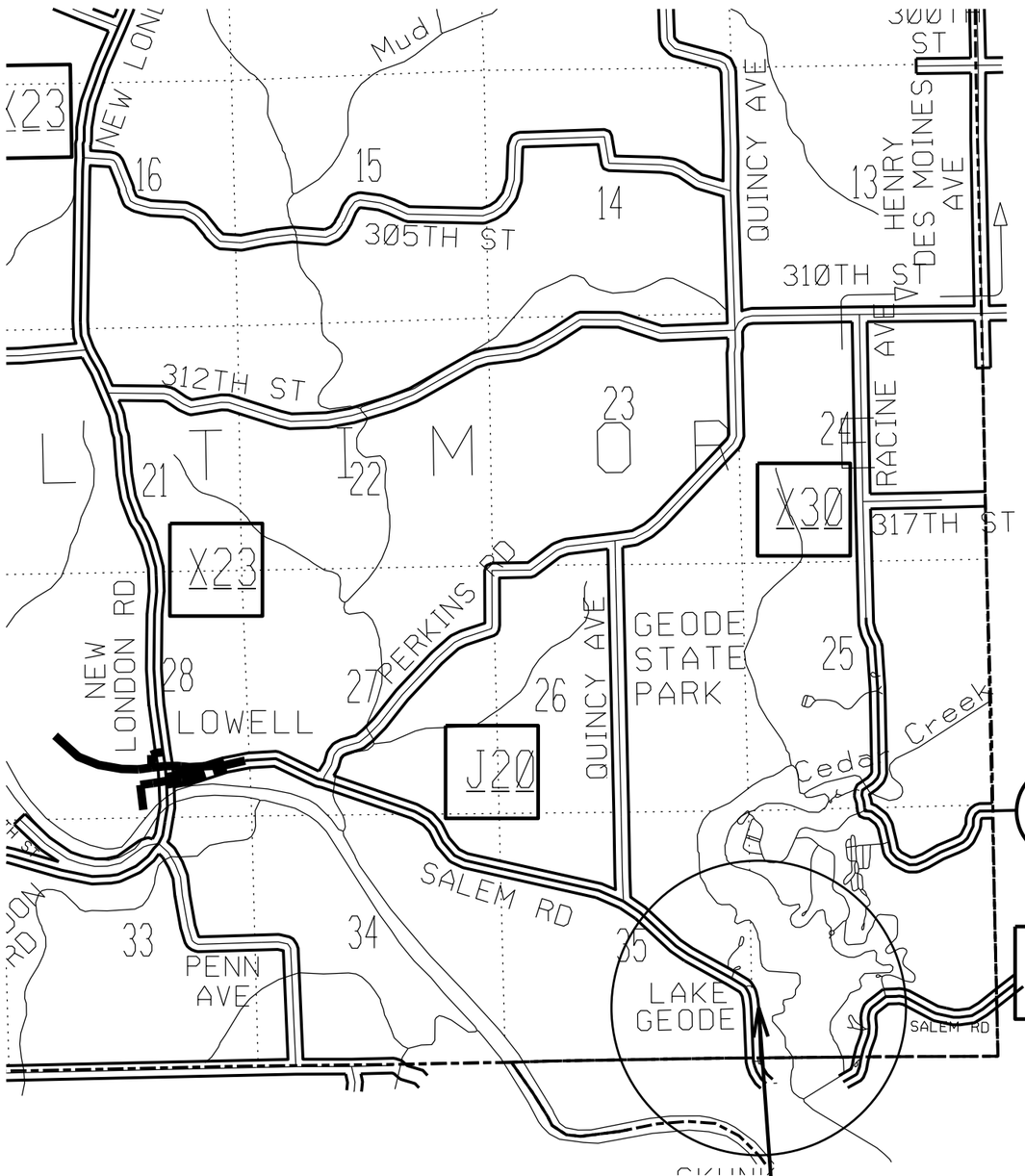

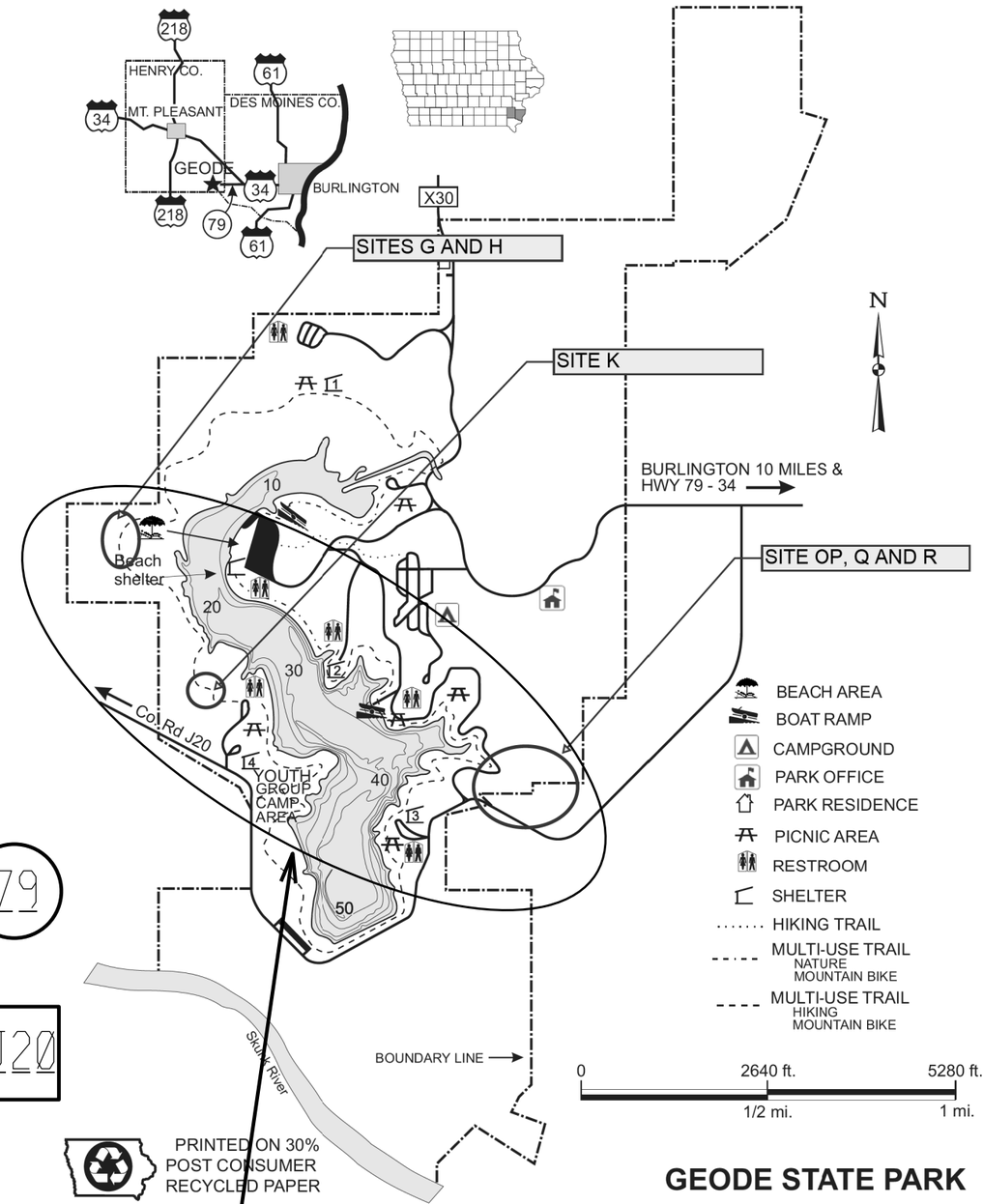

PRINTED ON 30% POST CONSUMER RECYCLED PAPER

GEODE STATE PARK

PROJECT LOCATION

CONSULTANT:

IOWA DEPARTMENT OF NATURAL RESOURCES

ENGINEERING SERVICES - WALLACE BUILDING
502 E. 9TH ST., DES MOINES, IA 50319-0034

PROJECT LOCATION MAP

SEDIMENT PONDS FOR:

GEODE STATE PARK

HENRY COUNTY

NO.	BY / DATE	REVISION

DRAWN BY: MH
PROJECT NUMBER: 16-06-44-02
CHK'D BY: HD
DATE: 12/28/2015
SHEET No: 2

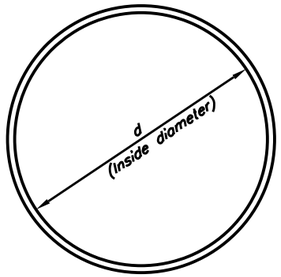

BENDING DIAGRAM FOR ⓑ AND ⓒ RODS

TABLE OF DIMENSIONS AND QUANTITIES

WELDED STEEL PIPE

NPS	PIPE O.D.	APPROX. WEIGHT	ⓐ ROD SIZE	H	R	X	O	LENGTH	NUMBER REQUIRED	N	ⓑ ROD SIZE	d	LENGTH	NUMBER REQUIRED	ⓒ ROD SIZE	d	LENGTH	NUMBER REQUIRED	ⓓ ROD SIZE	d	LENGTH	NUMBER REQUIRED
IN.	IN.	LBS.	IN.	IN.	IN.	IN.	IN.	IN.		IN.	IN.	IN.	IN.		IN.	IN.	IN.		IN.	IN.	IN.	
6	6 5/8	18.9	3/8	9	4	6	9 1/2	33 1/2	14	4 1/8	3/8	17 1/8	53 3/4	3	--	--	--	0	2 X 1/4	7 3/8	14 5/8	2
8	8 5/8	22.3	3/8	11	4 1/2	6	10 1/2	36 1/2	10	6 1/2	3/8	19 1/8	60 1/8	3	--	--	--	0	2 X 1/4	9 3/8	17 3/4	2
10	10 3/4	24.7	3/8	13	4 1/2	6	11 1/2	39 1/2	10	7 1/8	3/8	21 1/4	66 3/4	3	--	--	--	0	2 X 1/4	11 1/2	21 1/8	2
12	12 3/4	27.1	3/8	15	4 1/2	6	12 1/2	42 1/2	10	7 3/4	3/8	23 1/4	73	3	--	--	--	0	2 X 1/4	13 1/2	24 1/4	2
14	14	48.4	1/2	17	6 1/2	6	14	46	10	8 1/8	1/2	24	75 3/8	3	1/2	10	31 3/8	1	2 X 1/4	15	26 5/8	2
16	16	52.4	1/2	19	7	6	15	49	10	8 3/4	1/2	26	81 5/8	3	1/2	12	37 5/8	1	2 X 1/4	17	29 3/4	2
18	18	69.5	1/2	22	9	9	19 1/2	59 1/2	12	9 3/8	1/2	34	106 7/8	3	1/2	14	44	1	2 X 1/4	19	32 7/8	2
20	20	112.4	5/8	25	9 1/2	9	20 1/2	63 1/2	12	10	5/8	35 1/2	111 1/2	3	5/8	16	50 1/4	1	2 X 1/4	21 1/4	36 3/8	2
24	24	124.6	5/8	30	11	9	23	71	12	11	5/8	39 1/2	124 1/8	3	5/8	18 3/4	58 7/8	1	2 X 1/4	25 1/4	42 5/8	2

Note: NPS – Nominal Pipe Size.
Weld ⓑ and ⓒ rods and ⓓ bars to ⓐ rods and weld ⓐ rods to 3" diam. Steel Plate.
Rod and bar dimensions calculated from inside diameter and rounded to the nearest 1/8 inch.

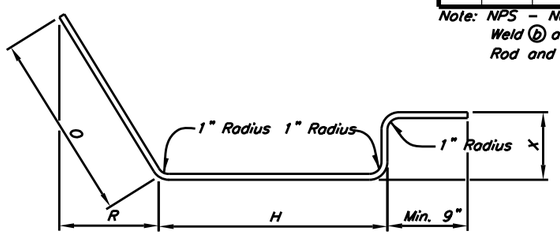

BENDING DIAGRAM FOR ⓐ RODS

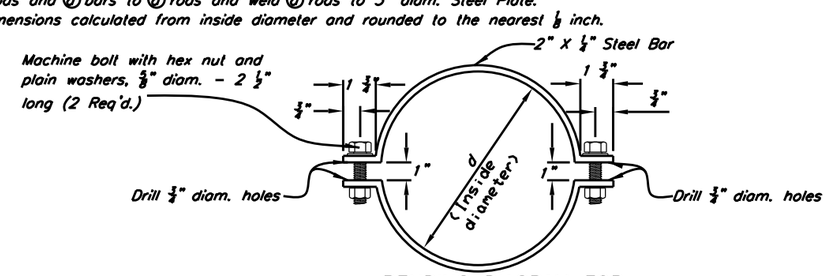

BENDING DIAGRAM FOR ⓓ BARS

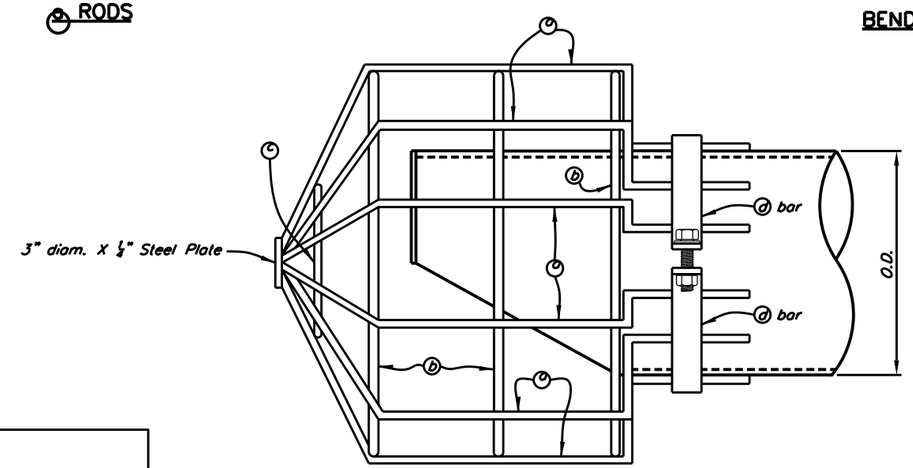

ELEVATION

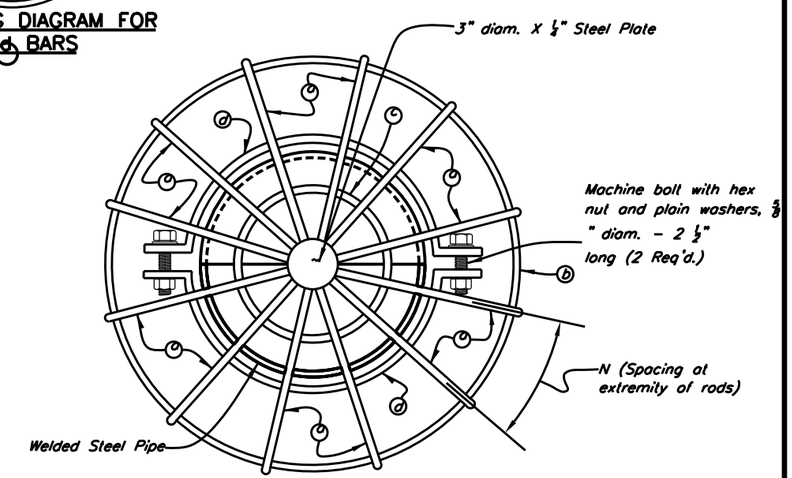

END ELEVATION

DATE | PAGE 1 OF 1

CONSULTANT:

IOWA DEPARTMENT OF NATURAL RESOURCES

ENGINEERING SERVICES - WALLACE BUILDING
502 E. 9TH ST., DES MOINES, IA 50319-0034

TRASH RACK DETAILS -1

SEDIMENT PONDS FOR:
GEODE STATE PARK

HENRY COUNTY

NO.	BY / DATE	REVISION

DRAWN BY: MH
PROJECT NUMBER: 16-06-44-02
CHK'D BY: HD
DATE: 12/28/2015
SHEET No: 3

TABLE OF CAPACITIES, DIMENSIONS AND QUANTITIES

Q	H	R	X	Y	S	O	Total	No.	N	M	L	P	F	V	No.	r	Length	No.	r	Length	No.	r	Length	No.	r	Length	No.	r	Length	Top plate Dia.
	(a) rods–3/4" dia.										Baffle plate				(b) rods–3/4" dia.			(c) rods–5/8" dia.			(d) rods–1/2: dia.			(e) rods–3/4" dia.			(f) rods–5/8" dia.			
Weir flow(c.f.s.)	Inches	Inches	Inches	Inches		Inches	Length	Req'd	Inches	Inches		Inches	Inches	Inches	Req'd	Inches	Inches	Req'd	Inches	Inches	Req'd	Inches	Inches	Req'd	Inches	Inches	Req'd	Inches	Inches	Inches
42" DIAMETER C.M.P. RISER (MAX. BARREL = 36" DIA.)																													
124	27	24 1/4	30	48 1/2	2	54	10'–4"	20	17 13/16	7 3/8	9–3	48	38	19	6	50	157 3/4	2	21	66 1/2	2	22 3/8	149	---	---	---	2	34	106 3/4	6
48" DIAMETER C.M.P. RISER (MAX. BARREL = 36' DIA.)																													
141	27	25 3/4	30	51 1/2	2	57 1/2	10'–7 1/2"	22	17 1/8	7 11/16	9–9	48	38	19	6	53	167 1/4	2	24	75 1/2	2	25 3/8	168	---	---	---	2	36	113 3/4	6
54" DIAMETER C.M.P. RISER (MAX. BARREL = 42" DIA.)																													
186	30	29 13/16	36	59 1/2	2	66 3/4	12'–1 3/4"	24	18 1/16	7 3/4	11–4	58	50	25	6	62 1/8	195 7/8	2	27	85 1/2	2	28 3/8	186	4	str.	46	2	42 1/4	133 3/8	8
60" DIAMETER C.M.P. RISER (MAX. BARREL = 48" DIA.)																													
238	33	31 3/4	49	75 1/2	2 3/8	81 3/4	14'–8 3/4	30	17 13/16	6 7/8	14–0	60	57	24	6	78 1/8	246 1/2	2	30	95	2	31 3/8	206	2	str.	57	2	53 1/4	168	8

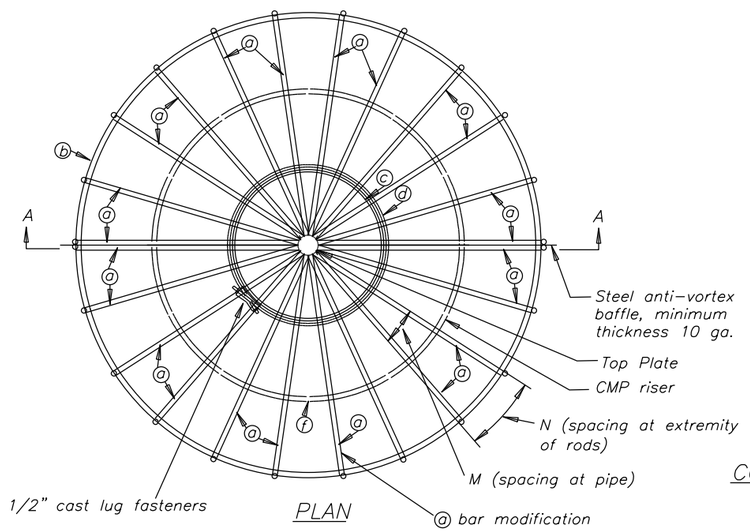

PLAN

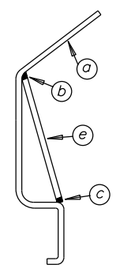

CONSTRUCTION DIAGRAM FOR (e) RODS

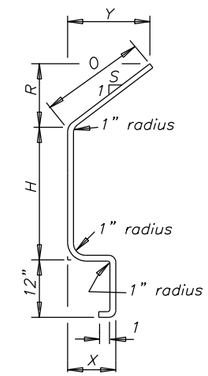

BENDING DIAGRAM FOR (a) RODS

FABRICATION NOTES:

1. Weld 4 (b), (c) and (f) rods to (a) rods and weld (a) rods to top plate.
2. When (e) rods are used, weld them to the (a) rods that are perpendicular (or the two (a) rods most nearly perpendicular) to the anti–vortex baffle plate.
3. The trash rack may be fabricated in identical halves and attached to the baffle plate with 1/2 inch diameter U bolts spaced approximately 12 inches C–C along the vertical and inclined sections of the (a) rods next to the plate.
4. Q in the table is based on weir flow for indicated depth of flow (H), using a weir coefficient of 3.33.
5. Trash rack shown on this plan is for a 54 inch diameter CMP riser.
6. Trash rack to be fabricated from smooth round steel bars conforming to ASTM Designation A–36.
7. Trash rach to have one coat of paint.

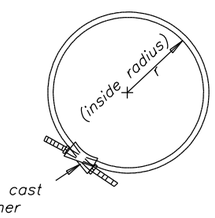

BENDING DIAGRAM FOR (d) RODS

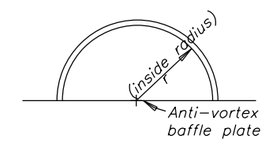

BENDING DIAGRAM FOR (b), (c) & (f) RODS

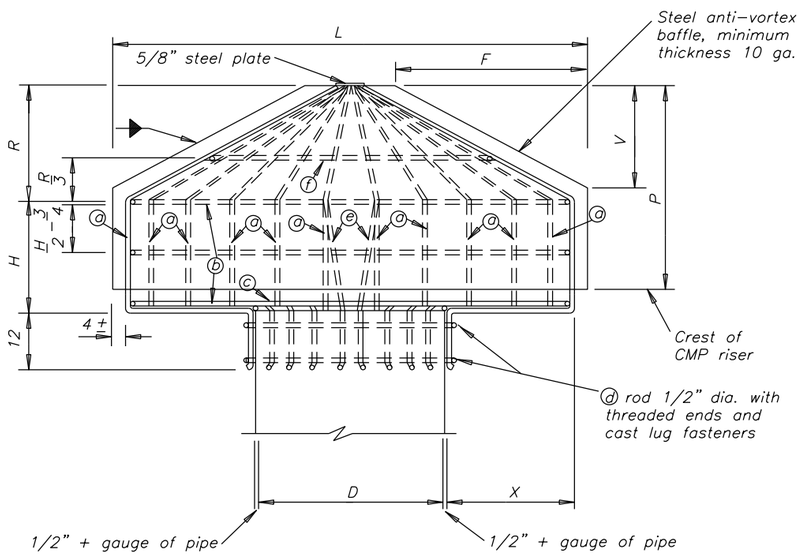

SECTIONAL ELEVATION A–A

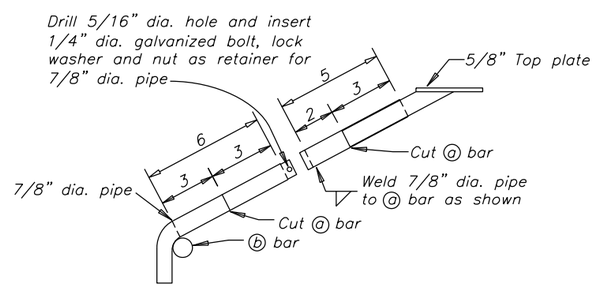

(a) BAR MODIFICATION

Revised 7/03

CONSULTANT:

IOWA DEPARTMENT OF NATURAL RESOURCES

ENGINEERING SERVICES - WALLACE BUILDING
502 E. 9TH ST., DES MOINES, IA 50319-0034

TRASH RACK DETAILS -2

SEDIMENT PONDS FOR:
GEODE STATE PARK
HENRY COUNTY

NO.	BY / DATE	REVISION

DRAWN BY: MH
PROJECT NUMBER: 16-06-44-02
CHK'D BY: HD
DATE: 12/28/2015
SHEET No: 4

ESTIMATED PROJECT QUANTITIES

ITEM NO.	ITEM	UNIT	TOTAL
1	Mobilization	LS	1
2	8" Dia. Smooth Steel Pipe	LF	282
3	12" Dia. Smooth Steel Pipe	LF	236
4	42" Dia. Smooth Steel Pipe Riser	LF	13
5	30" Dia. Smooth Steel Pipe	LF	118
6	Trash Rack/Bar Guarg Asmbly. (8")	EA	3
7	Trash Rack/Bar Guarg Asmbly. (12")	EA	2
8	Trash Rack/Bar Guarg Asmbly. (42")	EA	1
9	4'X4'X1/4" BASE PLATE	EA	1
10	5'X5'X1/4" ANTISEEP COLLAR	EA	6
11	78"X78"X1/4" ANITSEEP COLLAR	EA	5
12	Fine Drain Fill	TON	44
13	Earthwork/Fill/Grade	CY	24345
14	Core Trench	CY	3942
15	Seed & Mulch	AC	5
16	Clearing & Grubbing	AC	6
17	6 inch Stripping	CY	1363
18	Steel Tube Fence Gate	EA	2
19	48 " Woven Wire 2 Strand Barbed Wire Fence	LF	1297
20	5 Srand Barbed Wire Fence	LF	1371
21	Class D Rip Rap	TON	60

ESTIMATE REFERENCE INFORMATION

ITEM NO.	DESCRIPTION
19	This material shall meet Iowa DOT requirements for Class D Revetment as specified in Standard Specification for Highway and Bridge Construction.
13	The plan quantity includes 30% increase for shrinkage.
14	The plan quantity includes 30% increase for shrinkage.
18	Cost should include removal 7 replacement of fense on structures OP, Q & R

GENERAL NOTES

Verify actual locations and elevations with DNR Engineer.

All work shall conform to and be performed in accordance with all applicable codes and ordinances.

The contractor shall visit the site and inspect the project area and thoroughly familiarize themselves with the actual job conditions prior to bidding and the start of work. Failure to visit the project site shall not relieve the contractor from performing the work in accordance to the plans, specification, special provisions and contract.

The contractor shall verify, at the site, all dimensions and conditions shown on the plans and shall notify the DNR Engineer of any discrepancies, omissions, and/or conflicts prior to proceeding with the work.

It shall be the contractor's responsibility to provide waste areas or disposal sites for excess material (excavated material or broken concrete) which is not desirable to be incorporated into the work involved on this project. No payment for overhaul will be allowed for material hauled to these sites. No material shall be placed within the right-of-way, unless specifically stated in the plans or approved by the DNR Engineer.

The contractor shall not disturb desirable grass areas and desirable trees outside the construction limits. The contractor will not be permitted to park or service vehicles and equipment or use these areas for storage of materials. Storage, parking and service areas will be subject to the approval of the DNR Engineer.

Where utilities and fixtures are shown as Existing on the plans or encountered within the construction area, it shall be the responsibility of the contractor to notify the DNR Engineer of those utilities prior to the beginning of any construction. The contractor shall be afforded access to these facilities for necessary modification of services. Underground facilities, structures and utilities have been plotted from available surveys and records and therefore their locations must be considered approximate only. It is possible there may be others, the existence of which is presently not known or shown. It is the contractor's responsibility to determine their existence and exact location and to avoid damage thereto. No claims for additional compensation will be allowed to the contractor for any interference or delay caused by such work.

The contractor shall shape graded area to maintain surface drainage. All elevations are to finish grade.

The contractor is expected to have materials, equipment, and labor available on a daily basis to install and maintain erosion control features on the project. This may involve seeding, silt fence, rock ditch checks, silt basins or silt dikes.

CONSULTANT:

IOWA DEPARTMENT OF NATURAL RESOURCES
ENGINEERING SERVICES - WALLACE BUILDING
502 E. 9TH ST., DES MOINES, IA 50319-0034

QUANTITIES AND GENERAL INFORMATION

SEDIMENT PONDS FOR:
GEODE STATE PARK
HENRY COUNTY

NO.	BY / DATE	REVISION

DRAWN BY: MH
PROJECT NUMBER: 16-06-44-02
CHK'D BY: HD
DATE: 12/28/2015
SHEET No:
5

CONSULTANT:

IOWA DEPARTMENT OF NATURAL RESOURCES

ENGINEERING SERVICES - WALLACE BUILING
502 E. 9TH ST., DES MOINES, IA 50319-0034

DNR

OVERALL SITE PLAN

SEDIMENT PONDS FOR:

GEODE STATE PARK

HENRY COUNTY

NO:	BY: DATE:	REVISION

DRAWN BY: MH
PROJECT NUMBER: 16-06-44-02
CHK'D BY: HD
DATE: 12/28/2015

SHEET No:
6

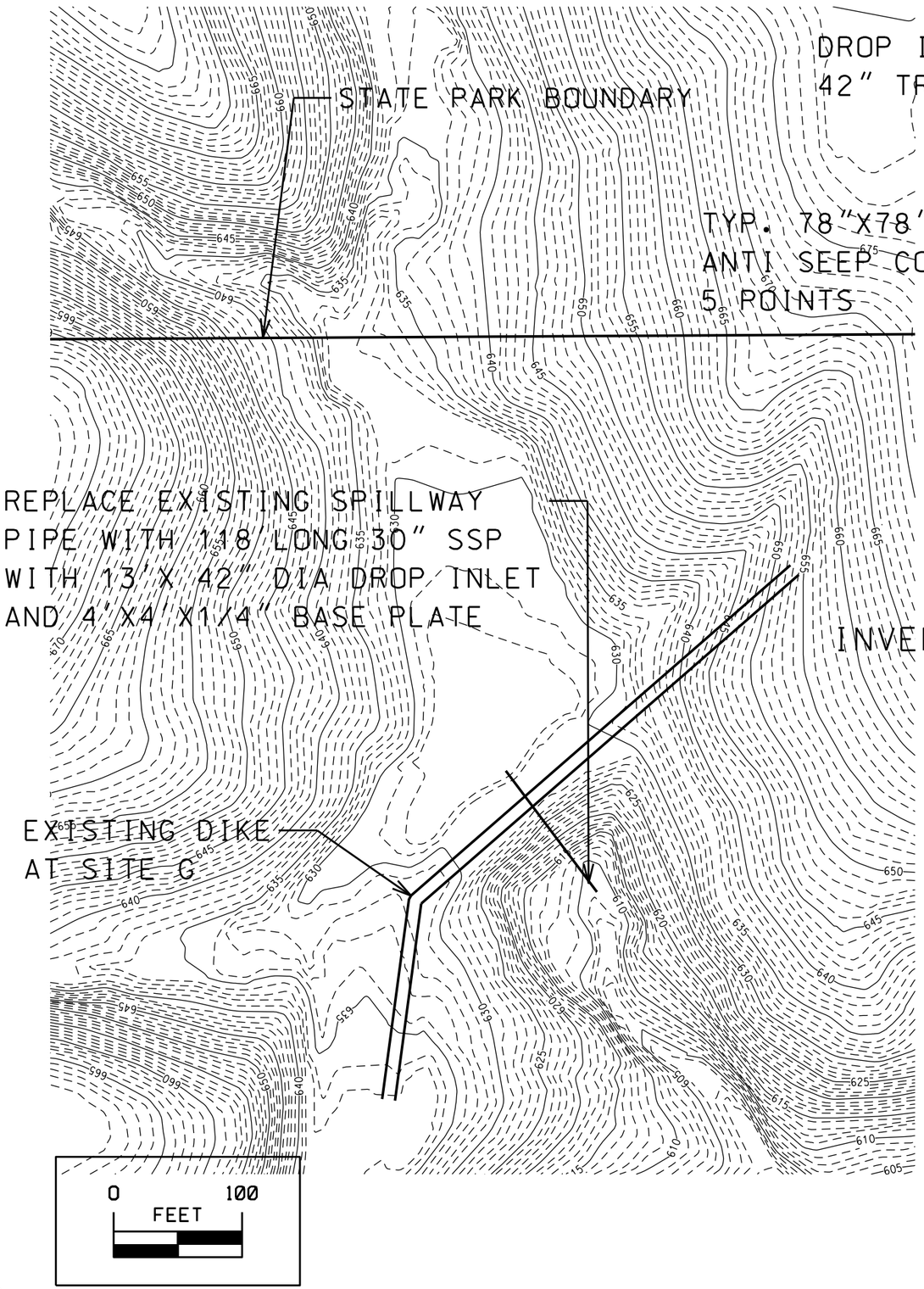

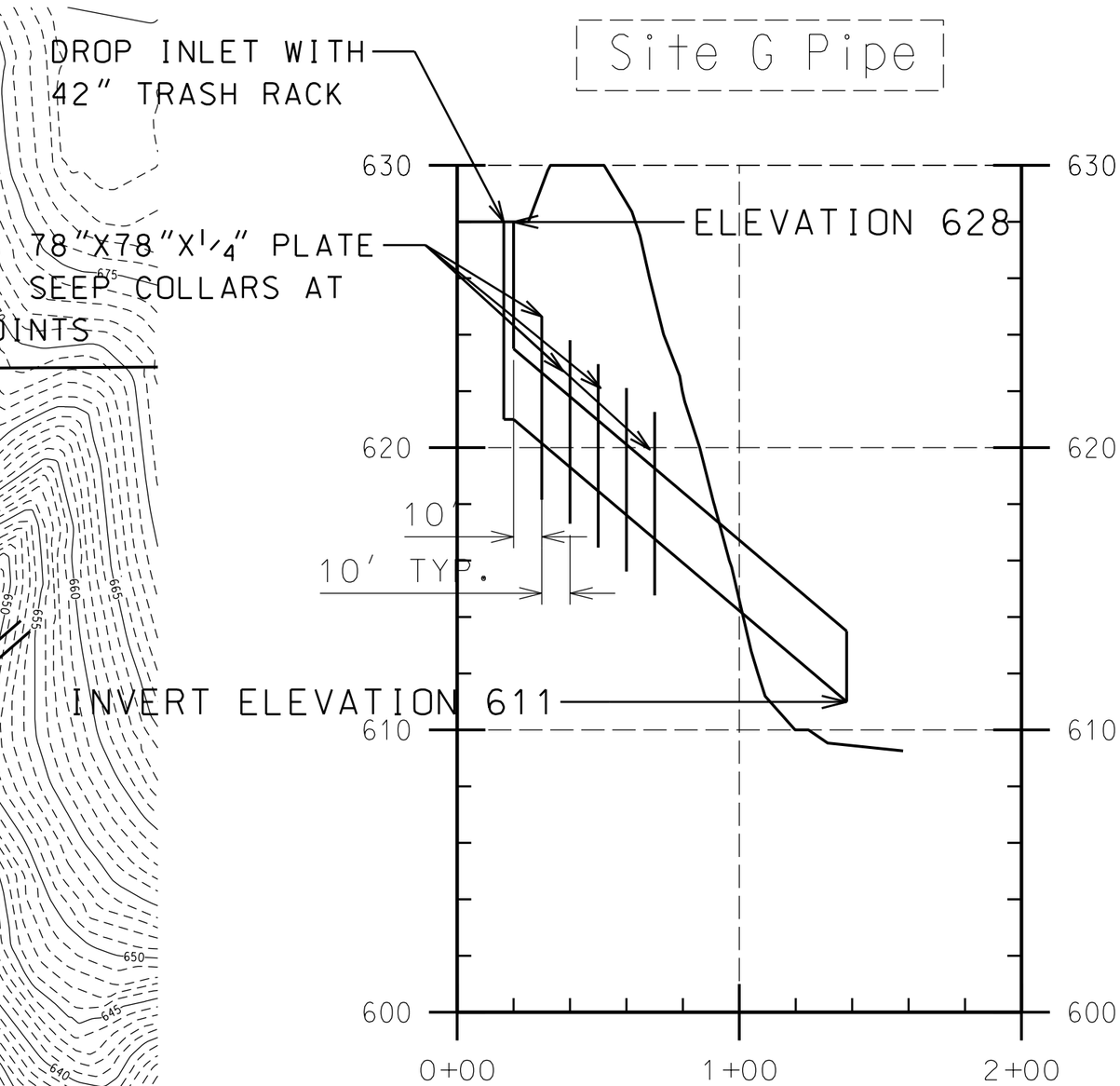

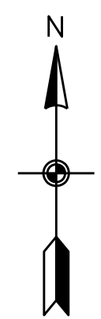

LINE	SURFACE	OFFSET
	lidar	0.00

Scaled 10.0000 Times Ver.
Scaled 1.0000 Times Hor.

CONSULTANT:

IOWA DEPARTMENT OF NATURAL RESOURCES

ENGINEERING SERVICES - WALLACE BUILDING
502 E. 9TH ST., DES MOINES, IA 50319-0034

SITE G PLAN & PROFILE

SEDIMENT PONDS FOR:
GEODE STATE PARK
HENRY COUNTY

NO.	BY / DATE	REVISION

DRAWN BY: MH
PROJECT NUMBER: 16-06-44-02
CHK'D BY: HD
DATE: 12/28/2015
SHEET No: 7

SITE PLAN H

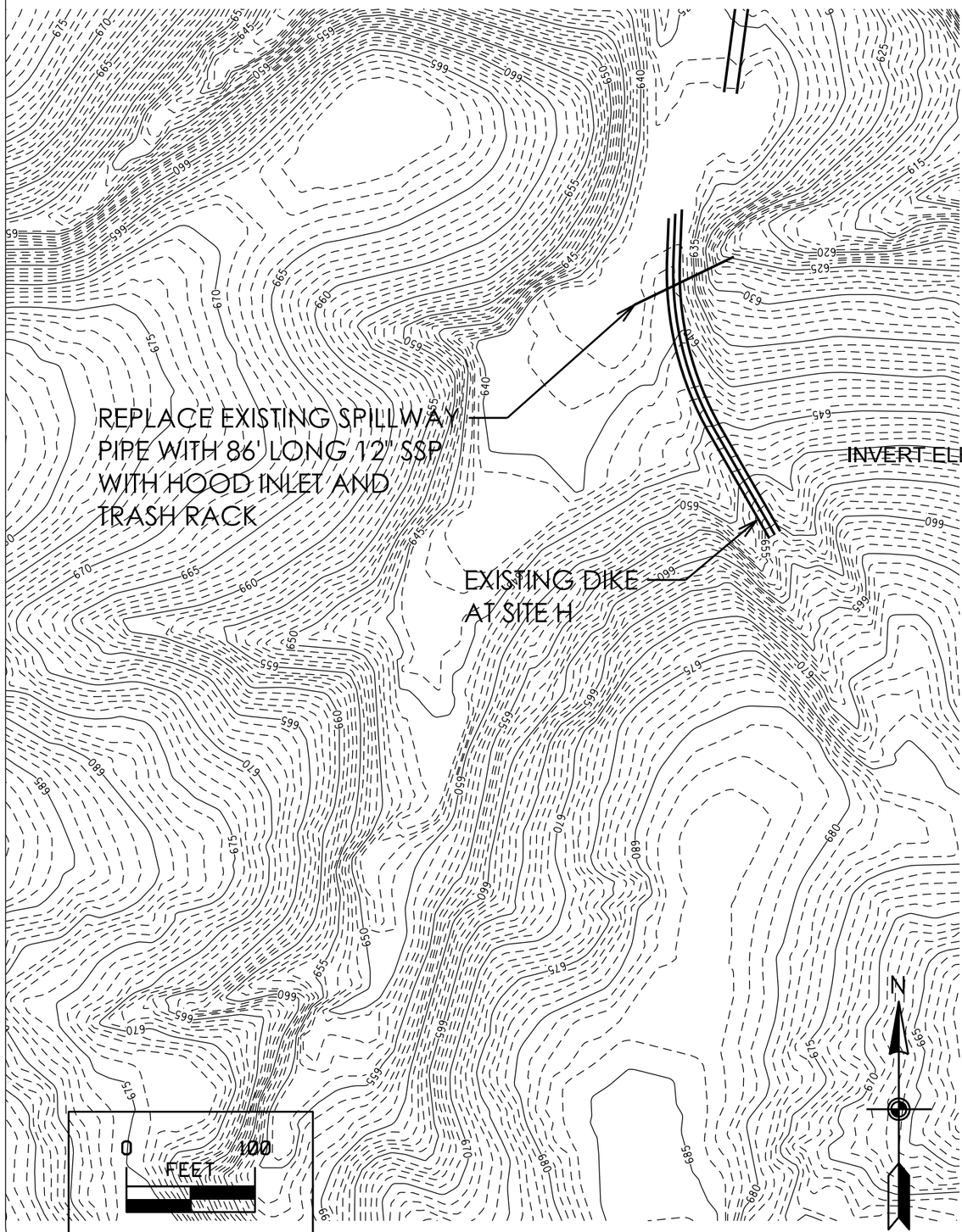

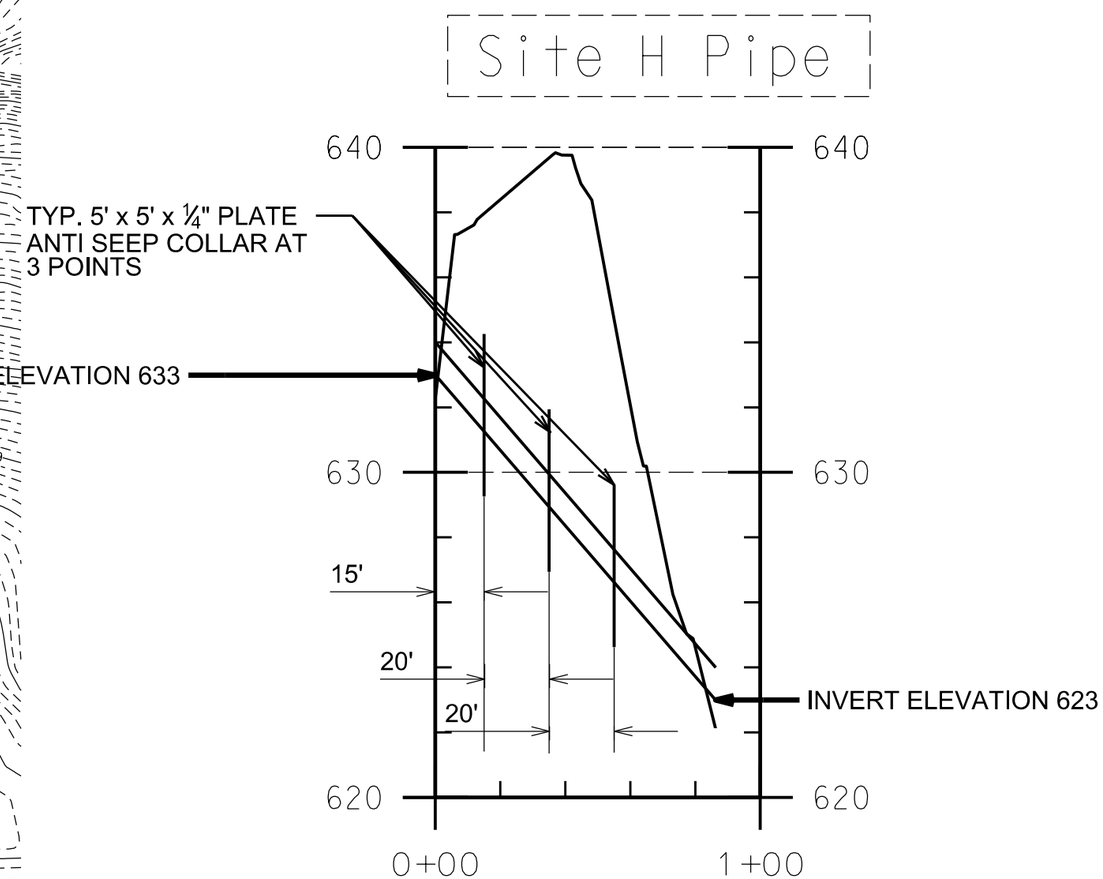

LINE	SURFACE	OFFSET
——	Site H Pipe Survey	0.00

Scaled 10.0000 Times Ver.
Scaled 1.0000 Times Hor.

CONSULTANT:

IOWA DEPARTMENT OF NATURAL RESOURCES

ENGINEERING SERVICES - WALLACE BUILDING
502 E. 9TH ST., DES MOINES, IA 50319-0034

SITE H PLAN & PROFILE

SEDIMENT PONDS FOR:
GEODE STATE PARK
HENRY COUNTY

NO.	BY / DATE	REVISION

DRAWN BY: MH
PROJECT NUMBER: 16-06-44-02
CHK'D BY: HD
DATE: 12/28/2015
SHEET No: 8

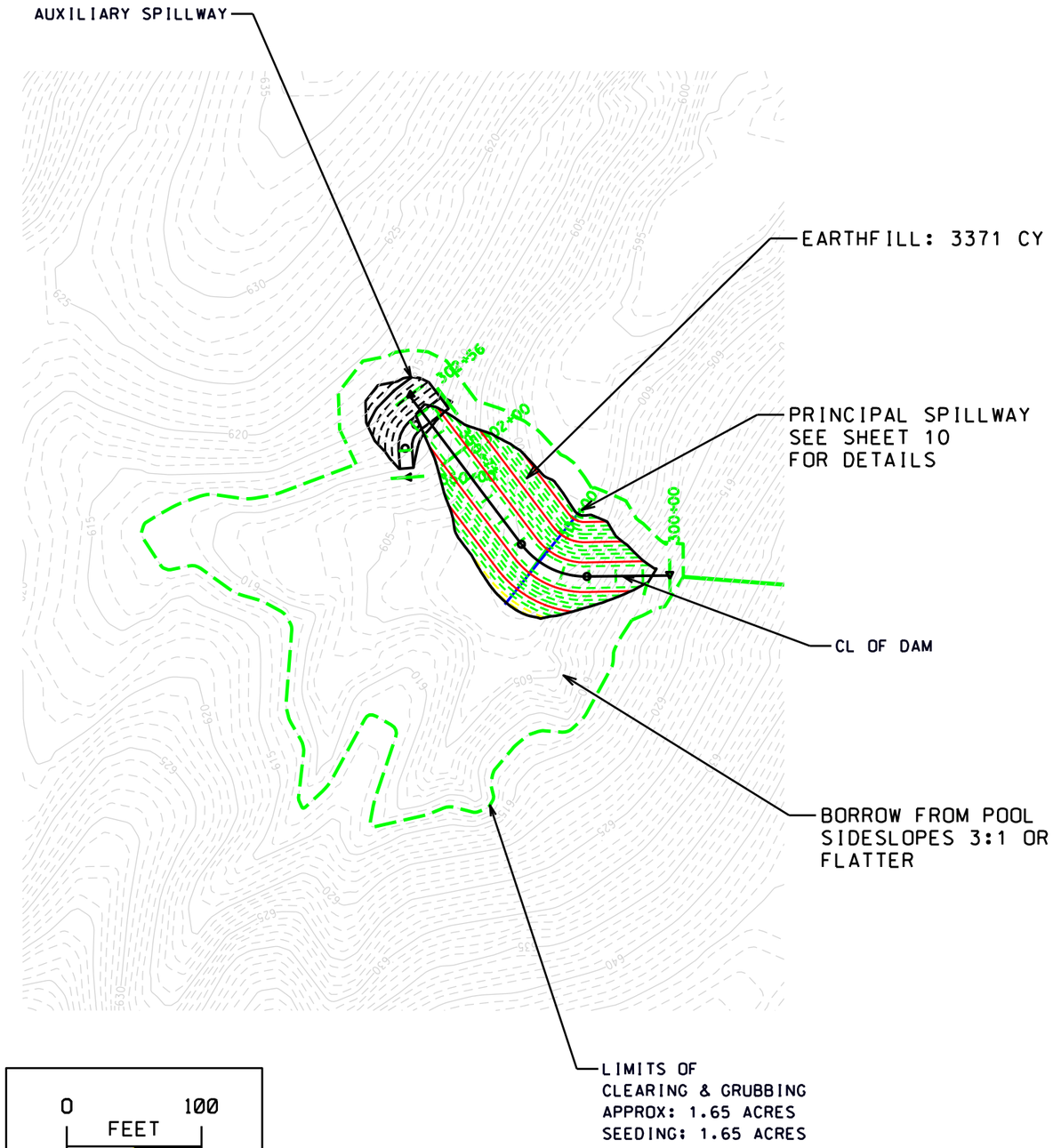

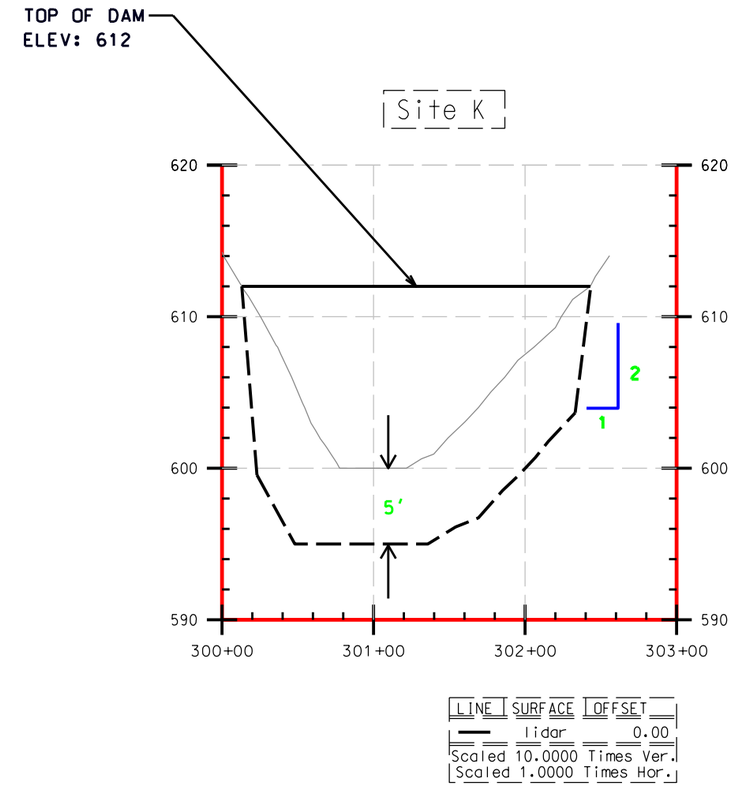

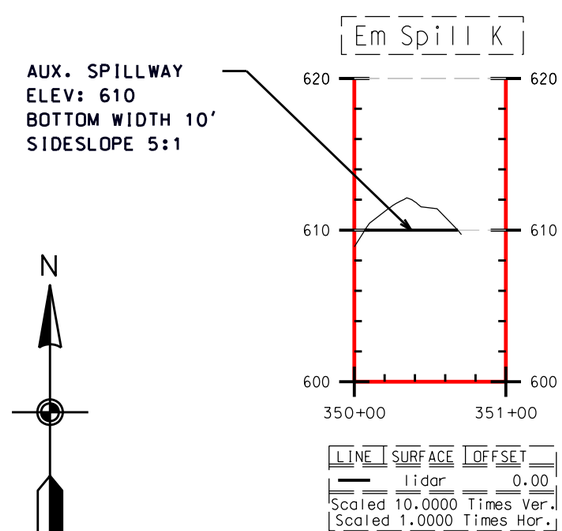

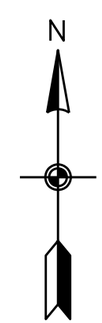

CONSULTANT:

IOWA DEPARTMENT OF NATURAL RESOURCES

ENGINEERING SERVICES - WALLACE BUILDING
502 E. 9TH ST., DES MOINES, IA 50319-0034

SITE K, PLAN & PROFILE

SEDIMENT PONDS FOR:
GEODE STATE PARK

HENRY COUNTY

NO.	BY DATE	REVISION

DRAWN BY: MH
PROJECT NUMBER: 16-06-44-02
CHK'D BY: HD
DATE: 12/28/2015
SHEET No: 9

SITE K

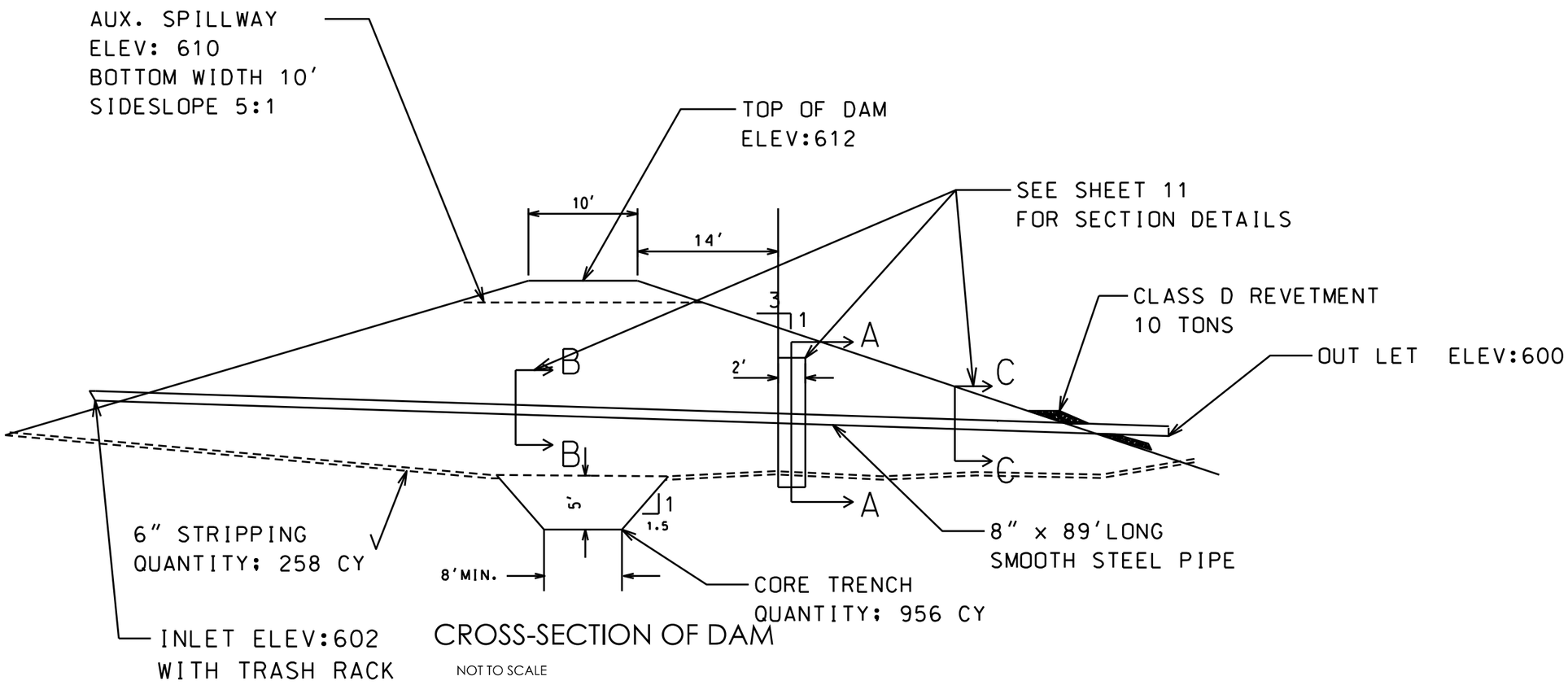

CROSS-SECTION OF DAM

NOT TO SCALE

CONSULTANT:

IOWA DEPARTMENT OF NATURAL RESOURCES

ENGINEERING SERVICES - WALLACE BUILDING
502 E. 9TH ST., DES MOINES, IA 50319-0034

SITE K, CROSS SECTION

SEDIMENT PONDS FOR:
GEODE STATE PARK

HENRY COUNTY

NO.	BY / DATE	REVISION

DRAWN BY: MH
PROJECT NUMBER: 16-06-44-02
CHK'D BY: HD
DATE: 12/28/2015

SHEET No: 10

FILTER DIAPHRAGM

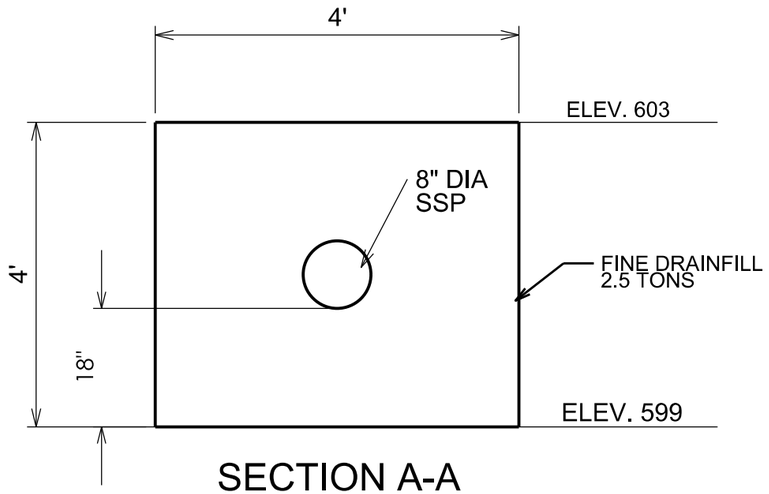

SECTION A-A

PIPE BEDDING
DOWNSTREAM OF FILTER DIAPHRAGM

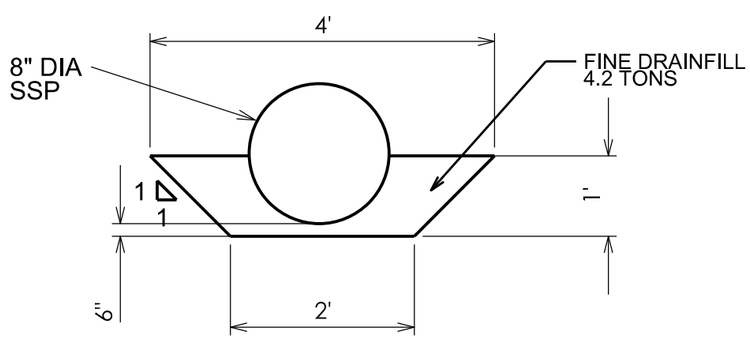

SECTION C-C

PIPE BEDDING
UPSTREAM OF FILTER DIAPHRAGM

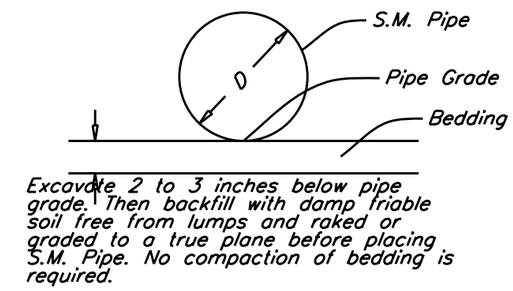

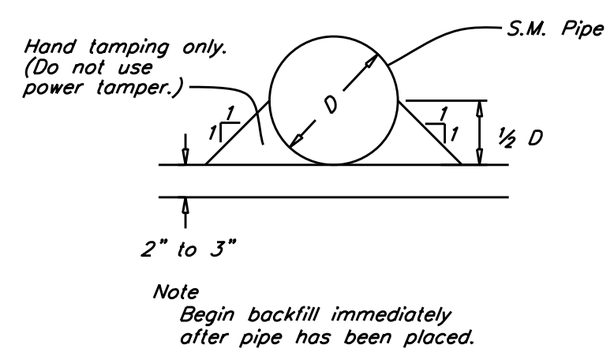

SECTION B-B

CONSULTANT:

IOWA DEPARTMENT OF NATURAL RESOURCES

ENGINEERING SERVICES - WALLACE BUILDING
502 E. 9TH ST., DES MOINES, IA 50319-0034

SITE K, DIAPHRAGM CROSS SECTIONS

SEDIMENT PONDS FOR:
GEODE STATE PARK

HENRY COUNTY

NO.	BY / DATE	REVISION

DRAWN BY: MH
PROJECT NUMBER: 16-06-44-02
CHK'D BY: HD
DATE: 12/28/2015

SHEET No: 11

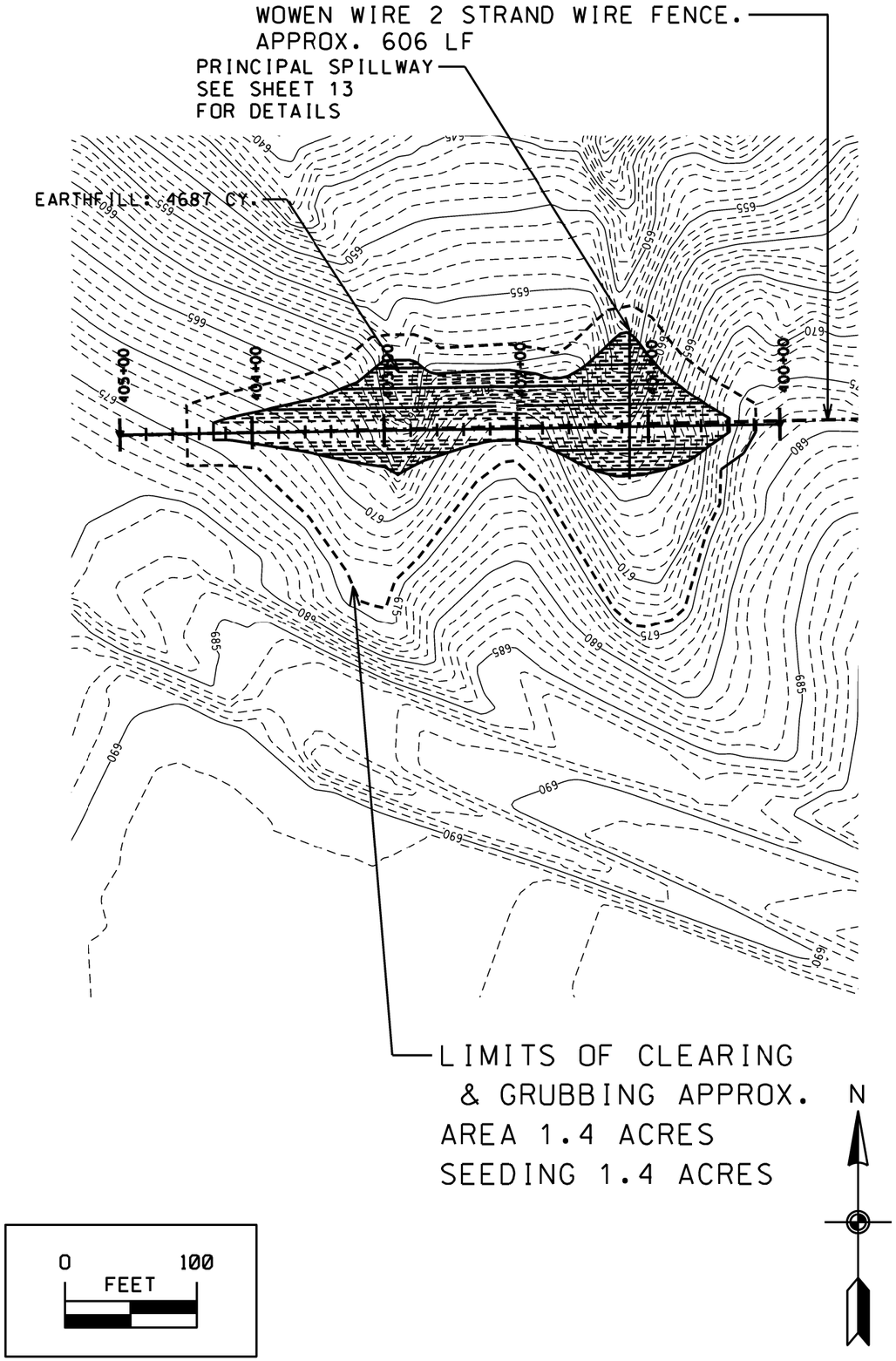

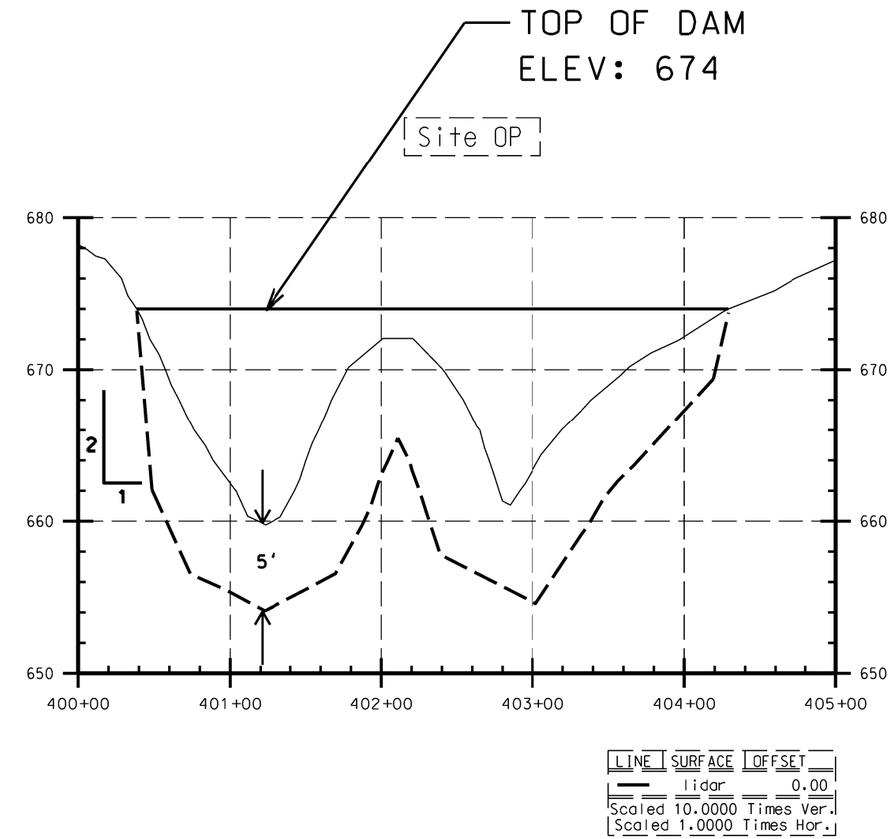

CONSULTANT:

IOWA DEPARTMENT OF NATURAL RESOURCES

ENGINEERING SERVICES - WALLACE BUILING
502 E. 9TH ST., DES MOINES, IA 50319-0034

SITE OP, PLAN & PROFILE

SEDIMENT PONDS FOR:
GEODE STATE PARK

HENRY COUNTY

NO.	BY / DATE	REVISION

DRAWN BY: MH
PROJECT NUMBER: 16-06-44-01
CHK'D BY:
DATE:
SHEET No: 12

SITE OP

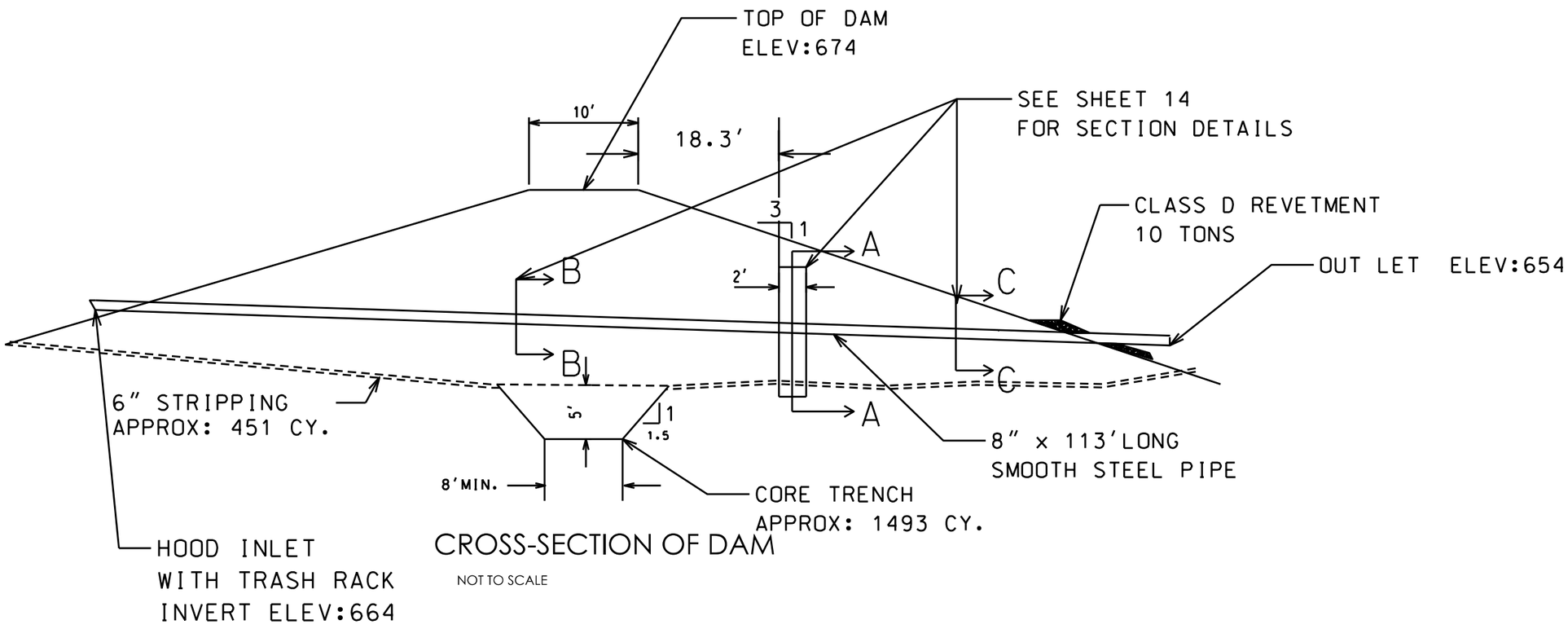

CROSS-SECTION OF DAM

NOT TO SCALE

CONSULTANT:

IOWA DEPARTMENT OF NATURAL RESOURCES

ENGINEERING SERVICES - WALLACE BUILDING
502 E. 9TH ST., DES MOINES, IA 50319-0034

SITE OP, CROSS SECTION

SEDIMENT PONDS FOR:
GEODE STATE PARK

HENRY COUNTY

NO.	BY / DATE	REVISION

DRAWN BY: MH
PROJECT NUMBER: 16-06-44-02
CHK'D BY: HD
DATE: 12/28/2015

SHEET No:
13

FILTER DIAPHRAGM

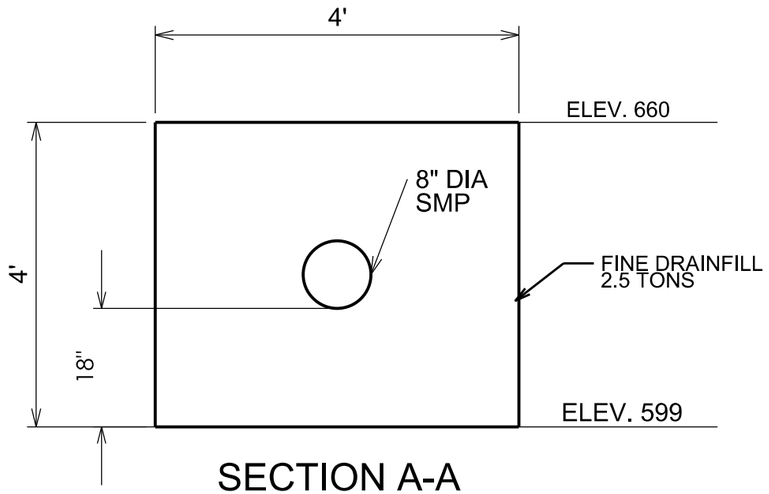

SECTION A-A

PIPE BEDDING
DOWNSTREAM OF FILTER DIAPHRAGM

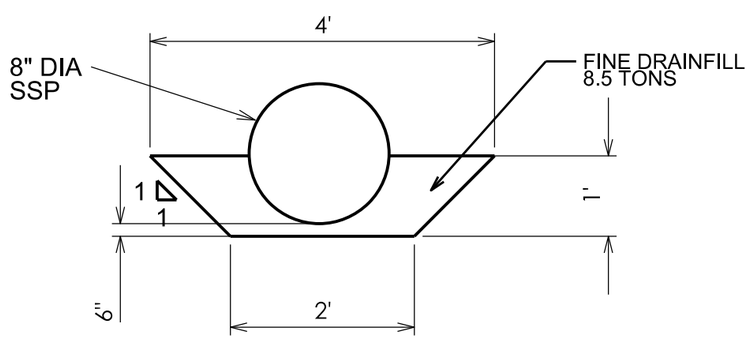

SECTION C-C

PIPE BEDDING
UPSTREAM OF FILTER DIAPHRAGM

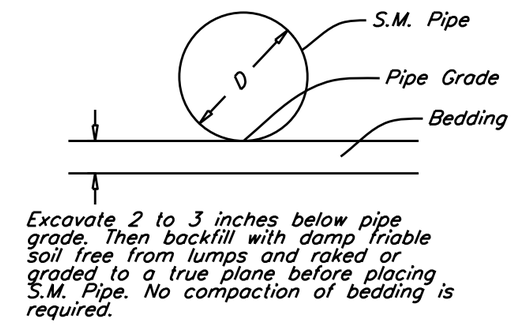

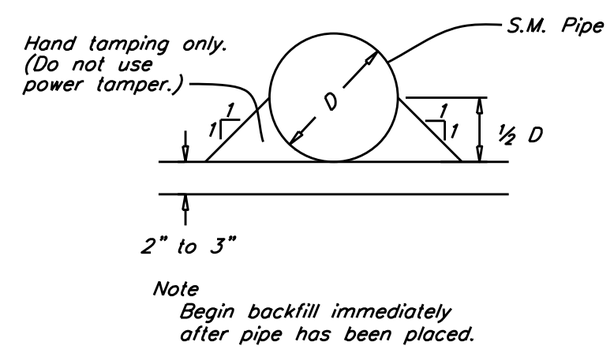

SECTION B-B

CONSULTANT:

IOWA DEPARTMENT OF NATURAL RESOURCES

ENGINEERING SERVICES - WALLACE BUILDING
502 E. 9TH ST., DES MOINES, IA 50319-0034

SITE OP, DIAPHRAGM SECTIONS

SEDIMENT PONDS FOR:
GEODE STATE PARK

HENRY COUNTY

NO.	BY / DATE	REVISION

DRAWN BY: MH
PROJECT NUMBER: 16-06-44-02
CHK'D BY: HD
DATE: 12/28/2015

SHEET No: 14

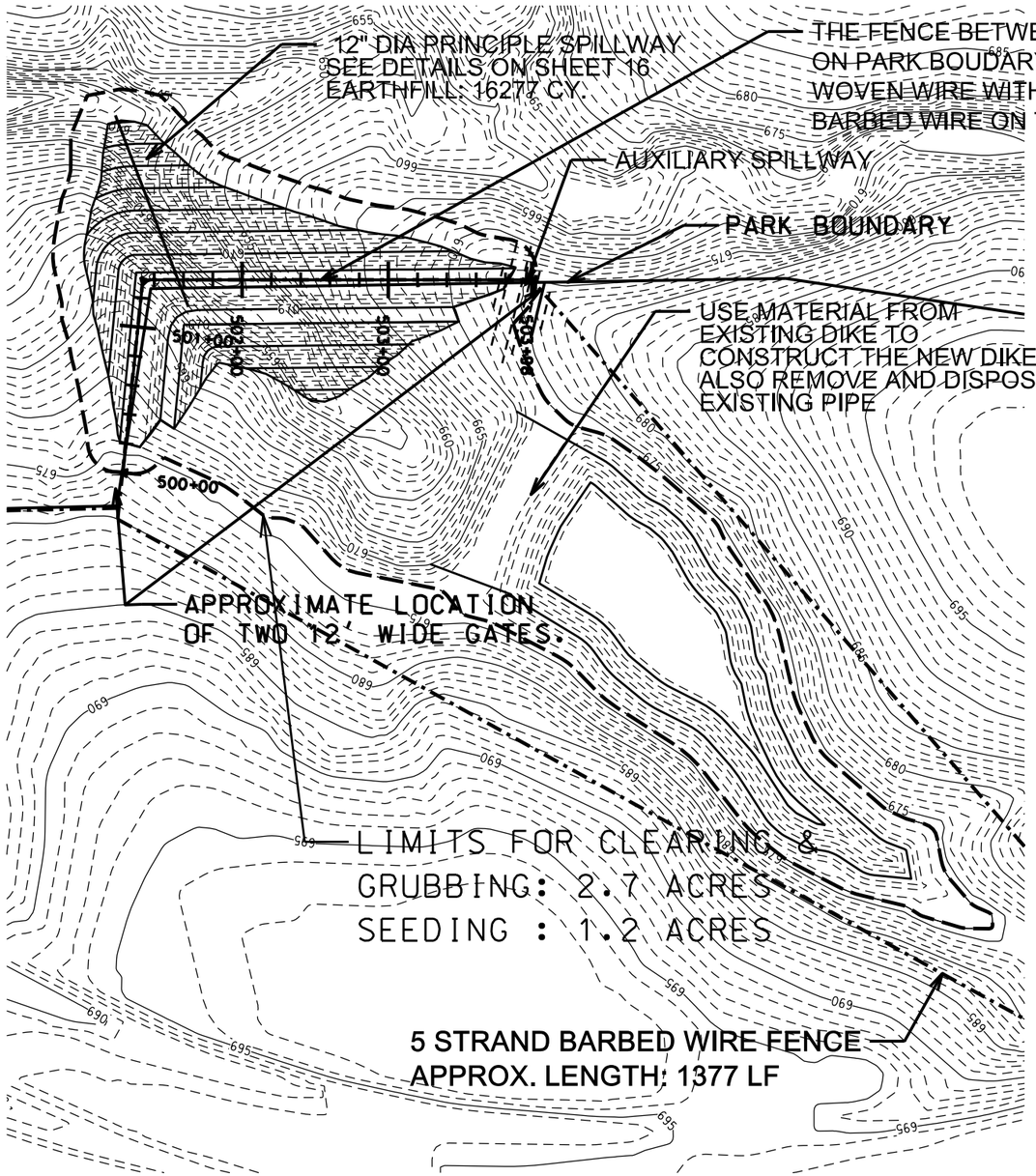

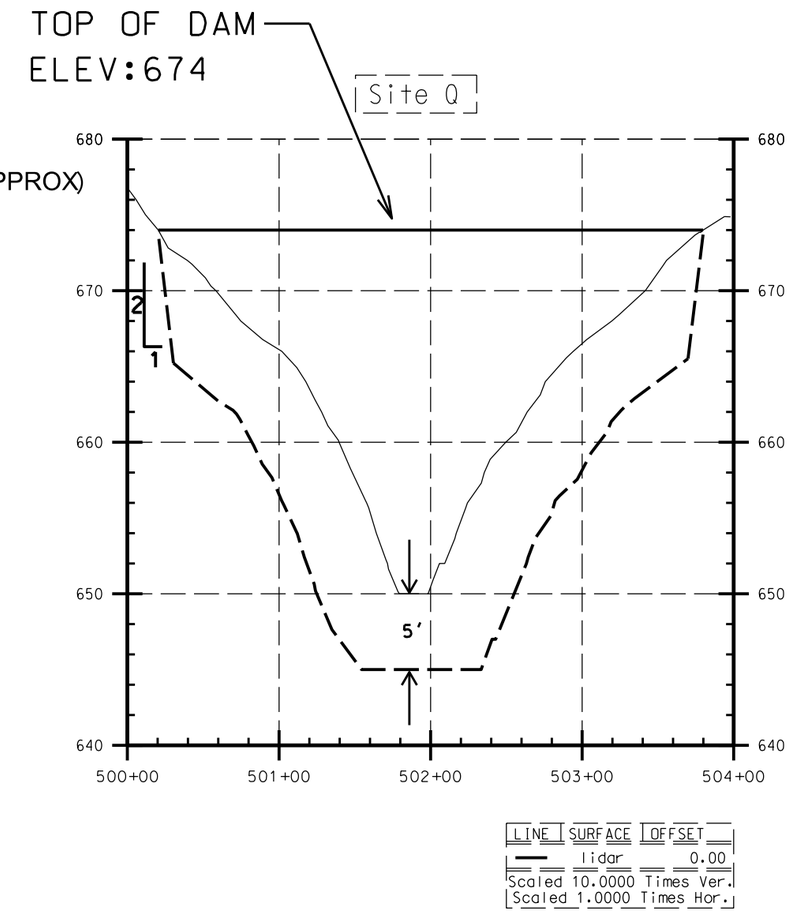

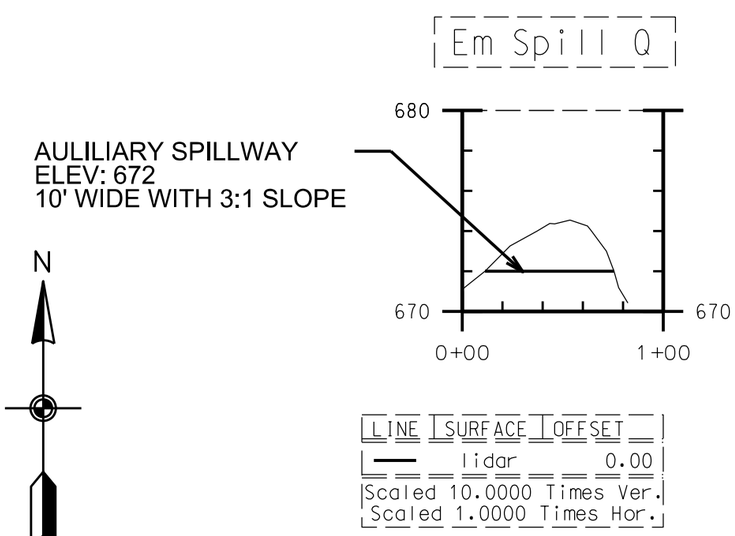

N

0 100
FEET

CONSULTANT:

IOWA DEPARTMENT OF NATURAL RESOURCES

ENGINEERING SERVICES - WALLACE BUILDING
502 E. 9TH ST., DES MOINES, IA 50319-0034

SITE Q, PLAN & PROFILE

SEDIMENT PONDS FOR:
GEODE STATE PARK
HENRY COUNTY

NO.	BY / DATE	REVISION

DRAWN BY: MH
PROJECT NUMBER: 16-06-44-02
CHK'D BY: HD
DATE: 12/28/2015

SHEET No: 15

SITE Q

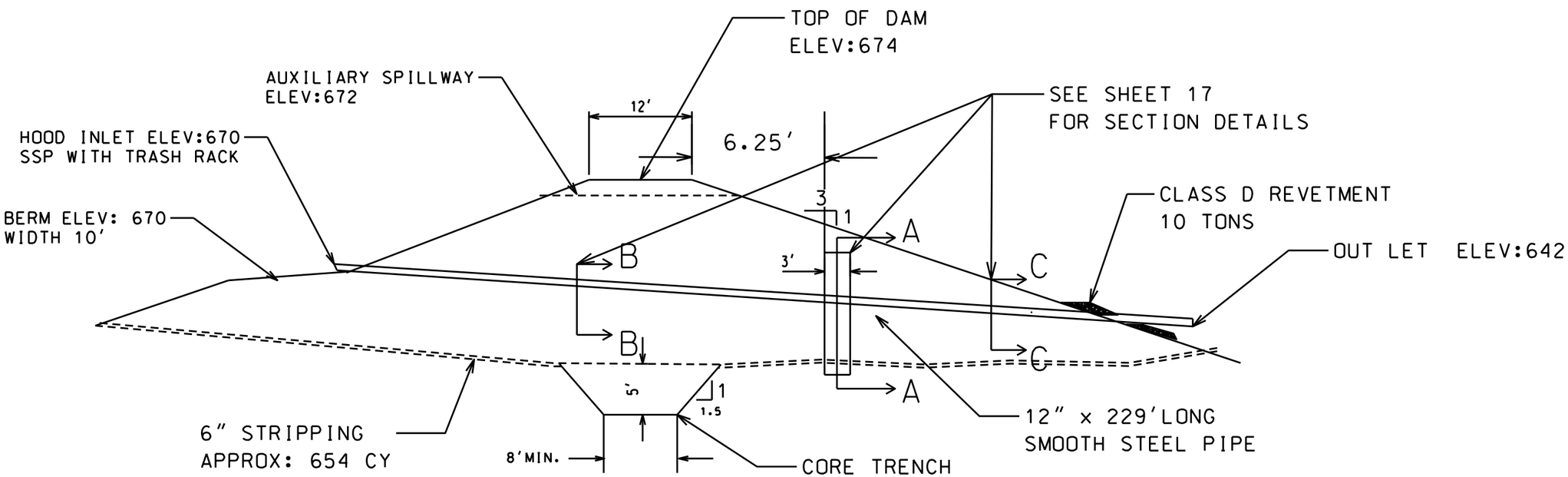

CROSS-SECTION OF DAM

NOT TO SCALE

CONSULTANT:

IOWA DEPARTMENT OF NATURAL RESOURCES

ENGINEERING SERVICES - WALLACE BUILDING
502 E. 9TH ST., DES MOINES, IA 50319-0034

SITE Q, CROSS SECTION

SEDIMENT PONDS FOR:
GEODE STATE PARK

HENRY COUNTY

NO.	BY / DATE	REVISION

DRAWN BY: MH
PROJECT NUMBER: 16-06-44-02
CHK'D BY: HD
DATE: 12/28/2015
SHEET No: 16

FILTER DIAPHRAGM

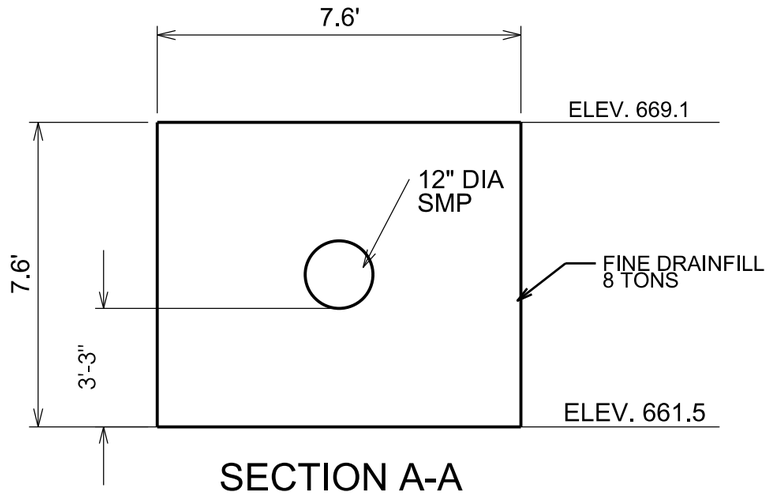

SECTION A-A

PIPE BEDDING
DOWNSTREAM OF FILTER DIAPHRAGM

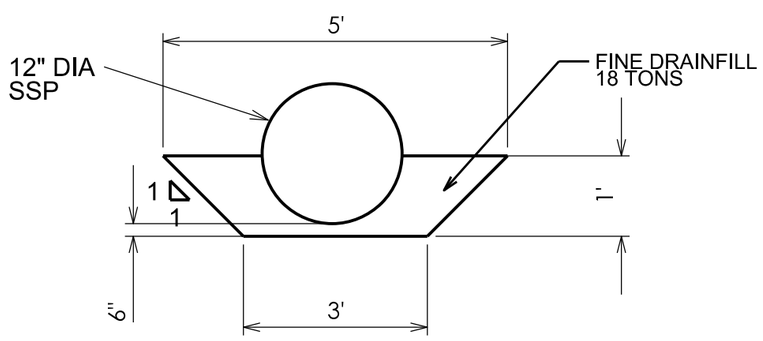

SECTION C-C

PIPE BEDDING
UPSTREAM OF FILTER DIAPHRAGM

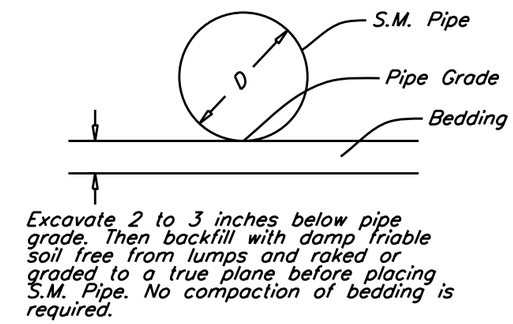

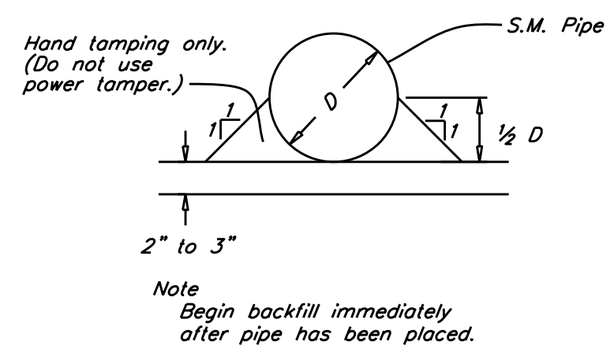

SECTION B-B

CONSULTANT:

IOWA DEPARTMENT OF NATURAL RESOURCES

ENGINEERING SERVICES - WALLACE BUILDING
502 E. 9TH ST., DES MOINES, IA 50319-0034

SITE Q, DIAPHRAGM SECTIONS

SEDIMENT PONDS FOR:
GEODE STATE PARK

HENRY COUNTY

NO.	BY / DATE	REVISION

DRAWN BY: MH
PROJECT NUMBER: 16-06-44-02
CHK'D BY: HD
DATE: 12/28/2015

SHEET No: 17

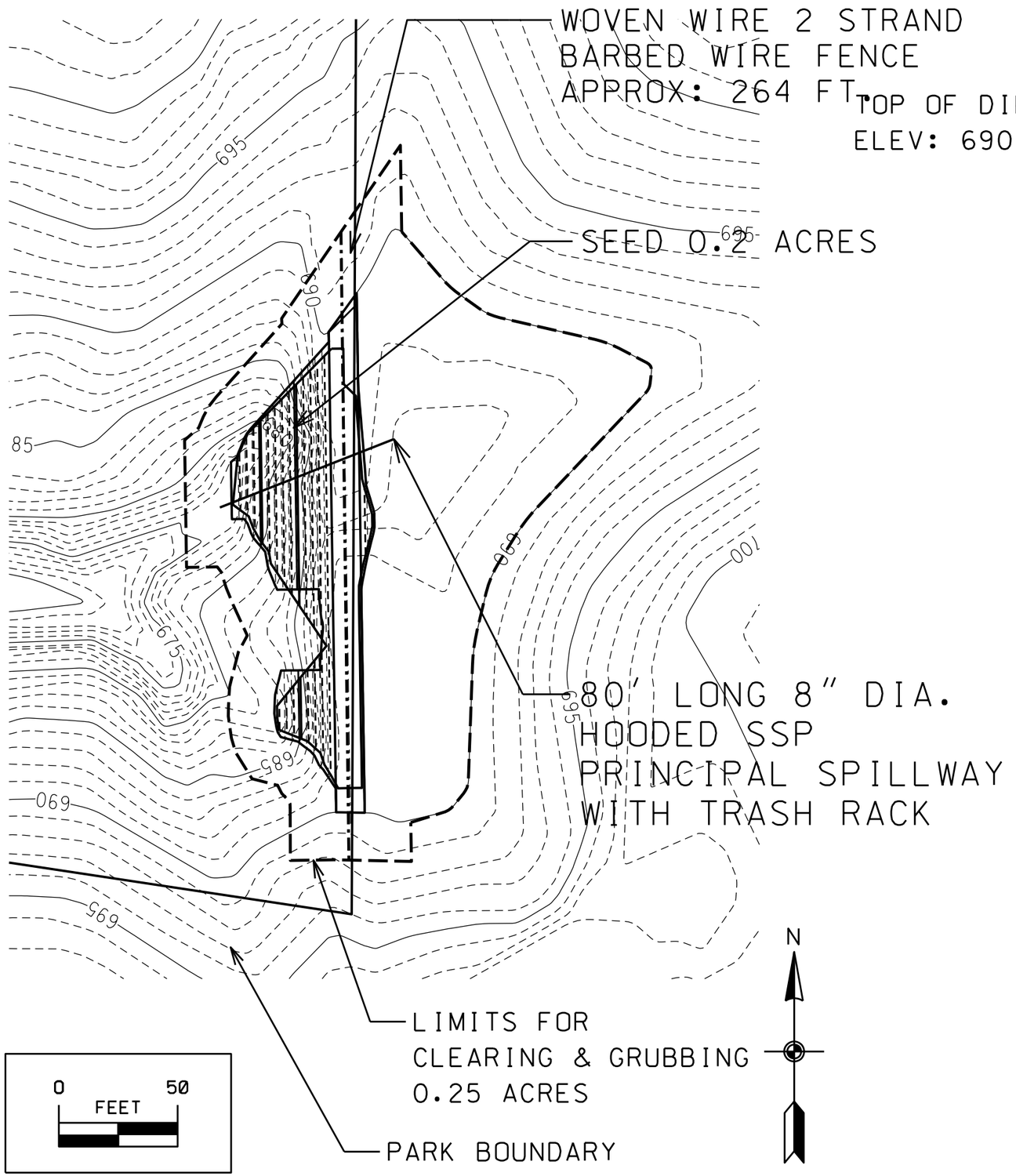

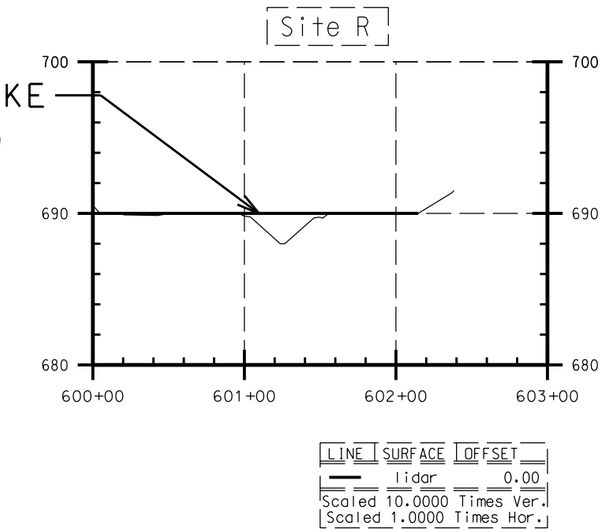

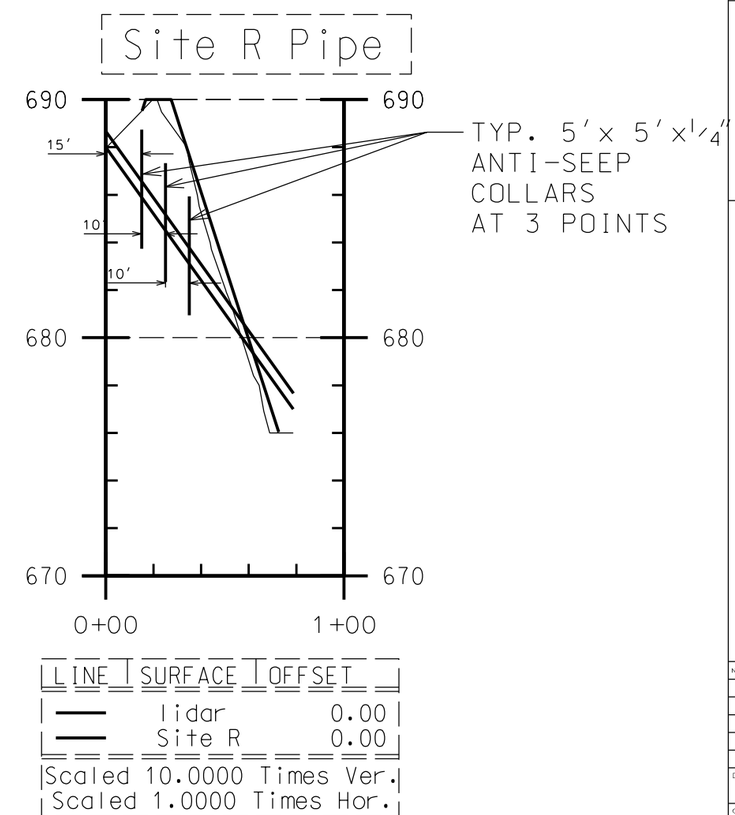

CONSULTANT:

IOWA DEPARTMENT OF NATURAL RESOURCES

ENGINEERING SERVICES - WALLACE BUILDING
502 E. 9TH ST., DES MOINES, IA 50319-0034

SITE R, PLAN & PROFILE

SEDIMENT PONDS FOR:
GEODE STATE PARK

HENRY COUNTY

NO.	BY DATE	REVISION

DRAWN BY: MH
PROJECT NUMBER: 16-06-44-02
CHK'D BY: HD
DATE: 12/28/2015

SHEET No: 18