CONSTRUCTION PLANS FOR

GYPSUM CITY OHV CAMPGROUND RESTROOM/SHOWER FACILITY

WEBSTER COUNTY, IOWA

CITY OF FORT DODGE

LEGEND

Features	Existing	Proposed
Spot Elevation	93.0	×93.0
Contour Elevation	93	93
Fence (Barbed, Field, Hog)	—x—x—	
Fence (Chain Link)	—//—//—	
Fence (Wood)		
Fence (Silt)		
Tree Line		
Tree Stump		
Deciduous Tree or Shrub		
Coniferous Tree or Shrub		
Communication	—C(*)—	C
Overhead Communication	—OC(*)—	OC
Fiber Optic	—FO(*)—	FO
Underground Electric	—E(*)—	E
Overhead Electric	—OE(*)—	OE
Gas Main with Size	—4" G(*)—	4" G
High Pressure Gas Main with Size	—4" HPG(*)—	4" HPG
Water Main with Size	—8" W(*)—	8" W
Sanitary Sewer with Size	—8" S(*)—	8" S
Duct Bank	—DUCT(*)—	
Test Hole Location for SUE w/ID	1	

(*) Denotes the survey quality service level for utilities

	Existing	Proposed
Sanitary Manhole		
Storm Sewer with Size	12" ST	12" ST
Storm Manhole		
Single Storm Sewer Intake		
Double Storm Sewer Intake		
Fire Hydrant		
Fire Hydrant on Building		
Water Main Valve		
Water Service Valve		
Well		
Utility Pole		
Guy Anchor		
Utility Pole with Light		
Utility Pole with Transformer		
Street Light		
Yard Light		
Electric Box	EB	
Electric Transformer		
Traffic Sign		
Communication Pedestal		
Communication Manhole		
Communication Handhole		
Fiber Optic Manhole		
Fiber Optic Handhole		
Gas Valve		
Gas Manhole		
Gas Apparatus		
Fence Post or Guard Post		
Underground Storage Tank		
Above Ground Storage Tank		
Sign		
Satellite Dish		
Mailbox		
Soil Boring		✦

UTILITY QUALITY SERVICE LEVELS

QUALITY LEVELS OF UTILITIES ARE SHOWN IN THE PARENTHESES WITH THE UTILITY TYPE AND WHEN APPLICABLE, SIZE. THE QUALITY LEVELS ARE BASED ON THE CI/ ASCE 38-02 STANDARD.

QUALITY LEVEL (D) INFORMATION IS DERIVED FROM EXISTING UTILITY RECORDS OR ORAL RECOLLECTIONS.

QUALITY LEVEL (C) INFORMATION IS OBTAINED BY SURVEYING AND PLOTTING VISIBLE ABOVE-GROUND UTILITY FEATURES AND USING PROFESSIONAL JUDGMENT IN CORRELATING THIS INFORMATION WITH QUALITY D INFORMATION.

QUALITY LEVEL (B) INFORMATION IS OBTAINED THROUGH THE APPLICATION OF APPROPRIATE SURFACE GEOPHYSICAL METHODS TO DETERMINE THE EXISTENCE AND APPROXIMATE HORIZONTAL POSITION OF SUBSURFACE UTILITIES.

QUALITY LEVEL (A) IS HORIZONTAL AND VERTICAL POSITION OF UNDERGROUND UTILITIES OBTAINED BY ACTUAL EXPOSURE OR VERIFICATION OF PREVIOUSLY EXPOSED SUBSURFACE UTILITIES, AS WELL AS THE TYPE, SIZE, CONDITION, MATERIAL, AND OTHER CHARACTERISTICS.

UTILITY WARNING

THE UTILITIES SHOWN HAVE BEEN LOCATED FROM FIELD SURVEY INFORMATION AND/OR RECORDS OBTAINED. THE SURVEYOR MAKES NO GUARANTEE THAT THE UTILITIES OR SUBSURFACE FEATURES SHOWN COMPRISE ALL SUCH ITEMS IN THE AREA, EITHER IN SERVICE OR ABANDONED. THE SURVEYOR FURTHER DOES NOT WARRANT THAT THE UTILITIES OR SUBSURFACE FEATURES SHOWN ARE IN THE EXACT LOCATION INDICATED EXCEPT WHERE NOTED AS QUALITY LEVEL A.

UTILITY CONTACT INFORMATION

THE FOLLOWING COMPANIES MAY HAVE FACILITIES IN THE PROXIMITY TO THE PROJECT.

MIDAMERICAN ENERGY COMPANY
ATTN: BECKY FLUER
301 S 25TH STREET
FORT DODGE, IOWA 50501
PH: (515) 574-5051

CITY OF FORT DODGE ENGINEERING
ATTN: CHAD SHAEFFER
819 1ST AVE SOUTH
FORT DODGE, IOWA 50501
PH: (515) 576-3601

OWNER

WEBSTER COUNTY CONSERVATION
1415 NELSON AVE
FORT DODGE, IOWA 50501

INDEX OF SHEETS

A.01	TITLE SHEET
C.01	OVERALL SITE PLAN
D.01	ENLARGEMENT SITE PLAN
U.01	CONSTRUCTION DETAILS
U.02	CONSTRUCTION DETAILS

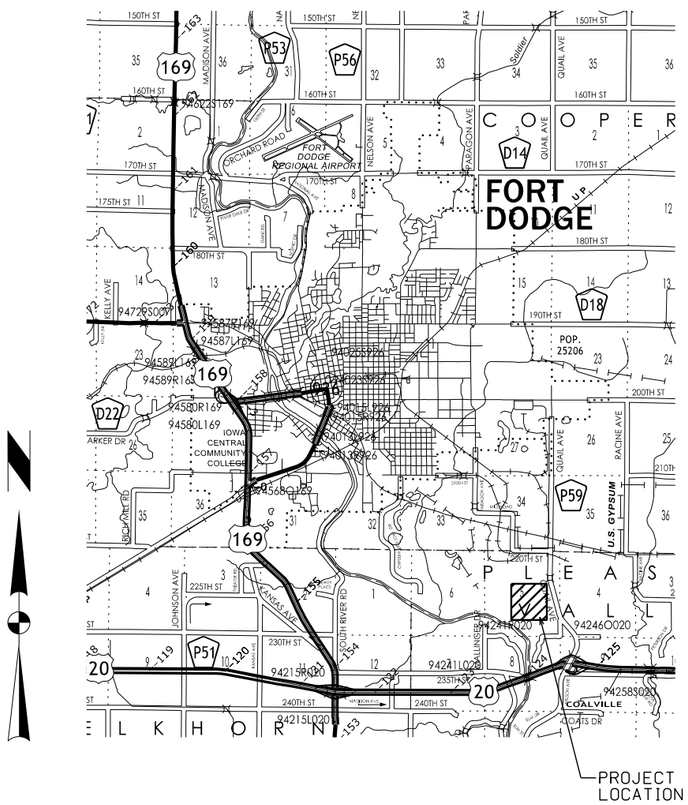

PROJECT DESCRIPTION

CONSTRUCTION TO INCLUDE BUT NOT LIMITED TO PROVIDING A PREMANUFACTURED RESTOOM/SHOWER BUILDING WITH FOOTINGS AT THE GYPSUM CITY OHV CAMPGROUND ALONG WITH WATER SERVICE, ELECTRICAL SERVICE, AND ASSOCIATED WORK.

GENERAL NOTES

UTILITY WARNING

A. THE UTILITIES SHOWN HAVE BEEN LOCATED FROM FIELD SURVEY INFORMATION AND/OR RECORDS OBTAINED. THE SURVEYOR MAKES NO GUARANTEE THAT THE UTILITIES SHOWN COMPRISE ALL SUCH UTILITIES IN THE AREA, EITHER IN SERVICE OR ABANDONED. THE SURVEYOR FURTHER DOES NOT WARRANT THAT THE UTILITIES SHOWN ARE IN THE EXACT LOCATION INDICATED. VERIFY LOCATION OF ALL UTILITIES BEFORE CONSTRUCTION.

B. NOTIFY UTILITY PROVIDERS PRIOR TO BEGINNING ANY CONSTRUCTION ACTIVITIES AND COORDINATE WITH UTILITY PROVIDERS AS NECESSARY DURING CONSTRUCTION. CONTRACTOR IS RESPONSIBLE FOR DETERMINING EXISTENCE, EXACT LOCATION, AND DEPTH OF ALL UTILITIES. PROTECT ALL UTILITY LINES AND STRUCTURES NOT SHOWN FOR REMOVAL OR MODIFICATION. ANY DAMAGES TO UTILITY ITEMS NOT SHOWN FOR REMOVAL OR MODIFICATION SHALL BE REPAIRED TO THE UTILITY OWNER'S SPECIFICATIONS AT THE CONTRACTOR'S EXPENSE.

C. CONSTRUCTION OF ALL STREET AND UTILITY IMPROVEMENTS SHALL CONFORM TO THE TECHNICAL SPECIFICATIONS, THE URBAN STANDARD SPECIFICATIONS FOR PUBLIC IMPROVEMENTS (SUDAS).

D. ALL TRAFFIC CONTROL SHALL BE PROVIDED IN ACCORDANCE WITH REQUIREMENTS SET FORTH IN THE MANUAL ON UNIFORM TRAFFIC CONTROL DEVICES (MUTCD). WHEN CONSTRUCTION ACTIVITIES OBSTRUCT PORTIONS OF THE ROADWAY, FLAGGERS SHALL BE PROVIDED. FLAGGERS SHALL CONFORM TO THE MUTCD IN APPEARANCE, EQUIPMENT AND ACTIONS.

F. NOTIFY OWNER AND ENGINEER AT LEAST 48 HOURS PRIOR TO BEGINNING WORK.

G. IN THE EVENT OF A DISCREPANCY BETWEEN THE QUANTITY ESTIMATES AND THE DETAILED PLANS, THE DETAILED PLANS SHALL GOVERN.

H. DIMENSIONS, BUILDING LOCATION, UTILITIES AND GRADING OF THIS SITE ARE BASED ON AVAILABLE INFORMATION AT THE TIME OF DESIGN. DEVIATIONS MAY BE NECESSARY IN THE FIELD. ANY SUCH CHANGES OR CONFLICTS BETWEEN THIS PLAN AND FIELD CONDITIONS ARE TO BE REPORTED TO THE ARCHITECT/ENGINEER PRIOR TO STARTING CONSTRUCTION. THE CONTRACTOR SHALL BE RESPONSIBLE FOR LAYOUT VERIFICATION OF ALL SITE IMPROVEMENTS PRIOR TO CONSTRUCTION.

I. CONTRACTOR TO LOAD AND TRANSPORT ALL MATERIALS CONSIDERED TO BE UNDESIRABLE TO BE INCORPORATED INTO THE PROJECT TO AN APPROVED OFF-SITE WASTE SITE.

J. THE CONTRACTOR IS RESPONSIBLE FOR CLEANING DIRT AND DEBRIS FROM NEIGHBORING STREETS, DRIVEWAYS, AND SIDEWALKS CAUSED BY CONSTRUCTION ACTIVITIES IN A TIMELY MANNER.

K. THE ADJUSTMENT OF ANY EXISTING UTILITY APPURTENANCES TO FINAL GRADE IS CONSIDERED INCIDENTAL TO THE SITE WORK.

L. THE CONTRACTOR SHALL BE RESPONSIBLE FOR INSTALLING EROSION CONTROL MEASURES AS NECESSARY. CONTRACTOR SHALL ALSO BE RESPONSIBLE FOR MAINTAINING ANY EXISTING EROSION CONTROL MEASURES ON SITE AT THE TIME OF CONSTRUCTION. GRADING AND SOIL EROSION CONTROL CODE REQUIREMENTS SHALL BE MET BY CONTRACTOR.

M. CONTRACTOR TO COORDINATE ELECTRICAL AND WATER WITH UTILITY SERVICE PROVIDER, CITY OF FORT DODGE, AND THE OWNER PRIOR TO CONSTRUCTION.

N. CONTRACTOR TO VERIFY ALL UTILITY CROSSINGS AND MAINTAIN MINIMUM 18" VERTICAL AND HORIZONTAL CLEARANCE BETWEEN UTILITIES. CONTRACTOR TO COORDINATE UTILITY ROUTING TO BUILDING AND VERIFY CONNECTION LOCATIONS AND INVERTS PRIOR TO CONSTRUCTION.

O. CONTRACTOR TO SEED ALL AREAS DISTURBED BY CONSTRUCTION WITH TYPE 1 SEED MIX.

P. ALL WATER LINE BENDS, TEES, AND FITTINGS ARE CONSIDERED INCIDENTAL TO THE WATER LINE CONSTRUCTION.

IOWA ONE CALL
1-800-292-8989
www.iowaonecall.com
811 Know what's below. Call before you dig.

STATE OF IOWA
CLAY R. SCHNECKLOTH
LANDSCAPE ARCHITECT
NO. 512
PROFESSIONAL LANDSCAPE ARCHITECT
License Expires: June 30, 2015

I hereby certify that the portion of this technical submission described below was prepared by me or under my direct supervision and responsible charge. I am a duly licensed Professional Landscape Architect under the laws of the State of Iowa.

Clay R. Schneckloth, ASLA Date

License Number 512

Pages or sheets covered by this seal:

MARK	REVISION	DATE	BY

Engineer: WAG | Checked By: CRS | Scale: 1"=
Technician: LFG | Date: 09/23/15 | Field Bk: Pg:

Project No: 114.0397 | Sheet A.01

WEBSTER COUNTY, IOWA

GYPSUM CITY OHV CAMPGROUND RESTROOM/SHOWER FACILITY

TITLE SHEET

SNYDER & ASSOCIATES, INC.
2727 S.W. SNYDER BLVD.
ANKENY, IOWA 50023
515-964-2020 | www.snyder-associates.com

Project No: 114.0397
Sheet A.01

Y:\pen\state.tbl
Y:\print_drivers\Black_Gray\VBBWeldWeight.PC4
Working
1:2000
9/23/2015
9:25:53 AM
LFG
L:\2014_projects\114.0397\Cooph\Restroom Building Plan Set\CD_114.0397_A01.DGN

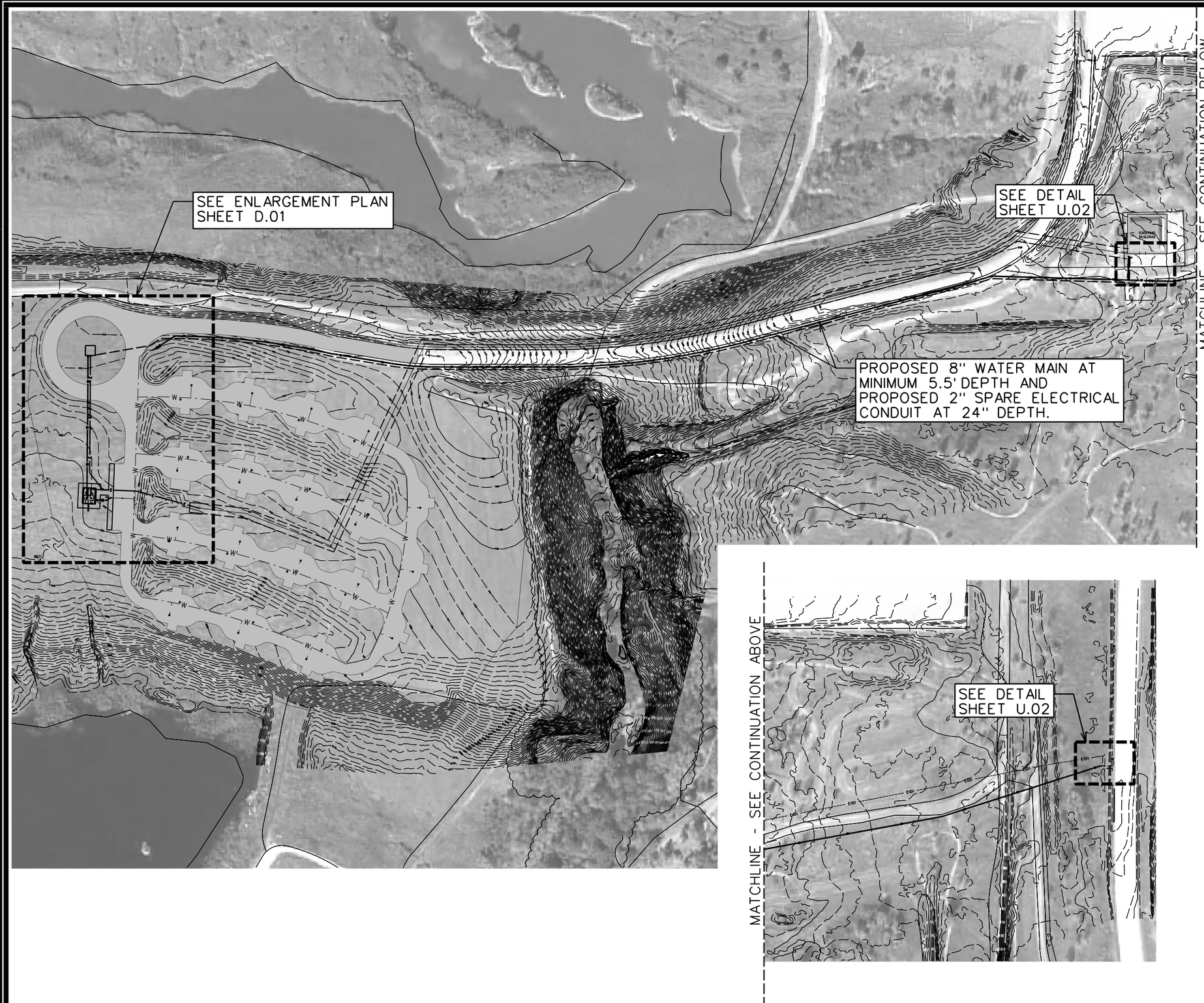

MARK	REVISION	DATE	BY

Engineer: WAG | Checked By: CRS | Scale: 1"=200'
Technician: LFG | Date: 09/23/15 | Field Bk: | Pg:
Project No: 114.0397 | Sheet C.01

GYPSUM CITY OHV CAMPGROUND RESTROOM/SHOWER FACILITY

OVERALL SITE PLAN

WEBSTER COUNTY, IOWA

SNYDER & ASSOCIATES, INC.
2727 S.W. SNYDER BLVD.
ANKENY, IOWA 50023
515-964-2020 | www.snyder-associates.com

Project No: 114.0397
Sheet C.01

PROPOSED 8" WATER MAIN AT MINIMUM 5.5' DEPTH

PROTECT EXISTING GUARD SHACK

PROVIDE 8" VALVE.

CONNECT TO EXISTING 4" WATER SERVICE STUB WITH REDUCER.

PROPOSED 2" SPARE ELECTRICAL CONDUIT, AT 24" DEPTH, IN SAME TRENCH AS WATER SERVICE

PROVIDE CONDUIT SWEEP, STUB UP 24" ABOVE GRADE AND CAP TOP OF CONDUIT.

PROVIDE YARD HYDRANT - BACK-FLOW PROTECTED, AUTOMATIC DRAINING, FREEZELESS SANITARY YARD HYDRANT MODEL S3 AS MANUFACTURED BY WOODFORD (WWW.WOOFORDMFG.COM) OR APPROVED EQUAL. PLACE YARD HYDRANT WITHIN 4'x4' CONCRETE PAD. COORDINATE EXACT LOCATION WITH OWNER PRIOR TO INSTALLATION. SEE DETAIL

PROTECT EXISTING GRAVEL DRIVE

PROTECT EXISTING 2" WATER LINE.

PROVIDE 1" WATER LINE TO YARD HYDRANT. MINIMUM 5.5' DEPTH.

PROVIDE 3" PVC CONDUIT TO GUARD SHACK. MINIMUM 24" DEPTH.

PROVIDE PRE-MANUFACTURED RESTROOM/SHOWER BUILDING - GROUP MODULAR BUILDING WITH FOOTINGS AND ASSOCIATED UTILITY CONNECTIONS AS NOTED. MANUFACTURED BY HUFFCUTT CONCRETE, OR APPROVED EQUAL. SEE SPECIFICATIONS. SEE DETAIL.

PROTECT EXISTING 2" WATER LINE.

PROTECT EXISTING 4" WATER LINE.

PROVIDE ELECTRICAL SERVICE IN 3" CONDUIT FROM HANDHOLE TO BUILDING. MINIMUM 24" DEPTH.

5" DEPTH PCC SIDEWALK WITH THICKENED EDGE

PROVIDE PRECAST ELECTRICAL HANDHOLE. SEE DETAIL.

PROTECT EXISTING ELECTRICAL SERVICE AND LIGHT.

CONNECT TO EXISTING WATER SERVICE STUB

PROVIDE ELECTRICAL SERVICE IN 4" CONDUIT. MINIMUM 24" DEPTH.

CONNECT TO EXISTING PANEL P2. SEE DETAIL.

PROVIDE 2" WATER SERVICE AT MINIMUM 5.5' DEPTH. SEE DETAIL.

PROVIDE 5" DEPTH PCC SIDEWALK

PROVIDE 6" SANITARY SEWER STUB. LOCATE AND CAP END. MINIMUM 48" DEPTH. SEE DETAIL.

PROTECT EXISTING ELECTRICAL SERVICE.

10.0'

51.7'

1106.30

FFE = 1106.50

10.0'

36.0'

1106.30

0 40

SCALE (FEET)

MARK	REVISION	DATE	BY

Engineer: WAG | Checked By: CRS | Scale: 1" = 40'

Technician: LFG | Date: 09/23/15 | Field Bk: | Pg:

Project No: 114.0397 | Sheet D.01

GYPSUM CITY OHV CAMPGROUND RESTROOM/SHOWER FACILITY

ENLARGEMENT SITE PLAN

WEBSTER COUNTY, IOWA

SNYDER & ASSOCIATES, INC.
2727 S.W. SNYDER BLVD.
ANKENY, IOWA 50023
515-964-2020 | www.snyder-associates.com

Project No: 114.0397

Sheet D.01

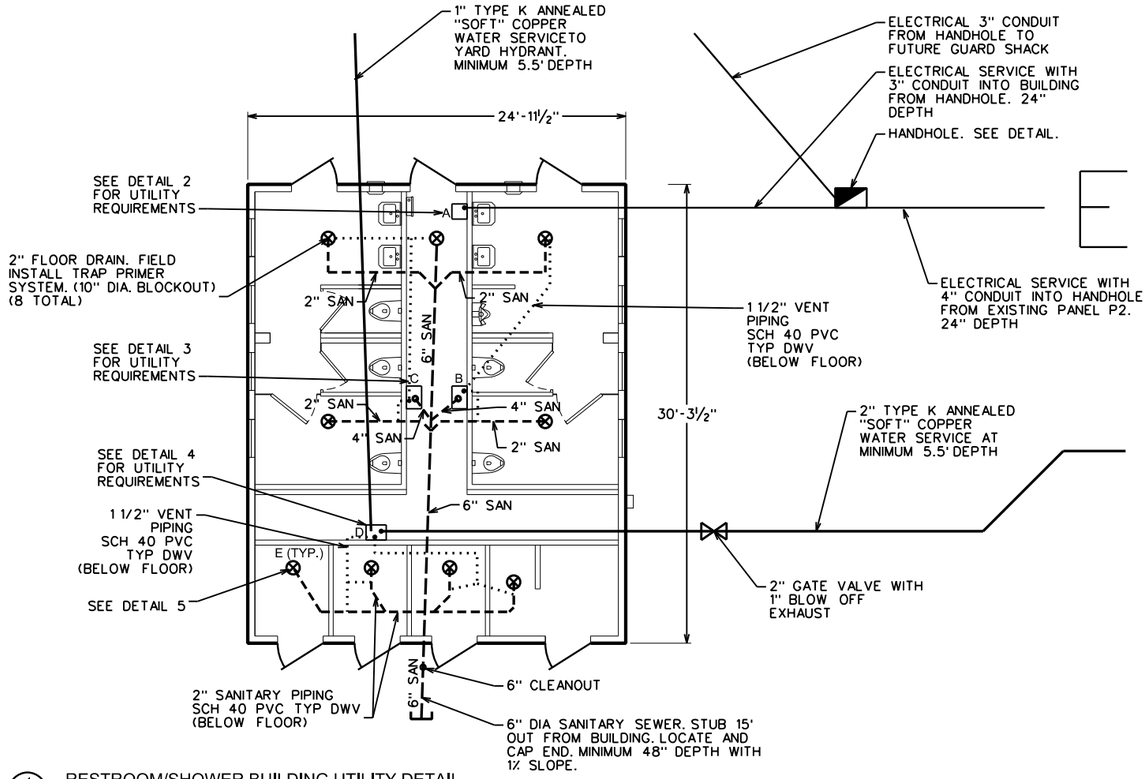

1 U.01 RESTROOM/SHOWER BUILDING UTILITY DETAIL
NO SCALE

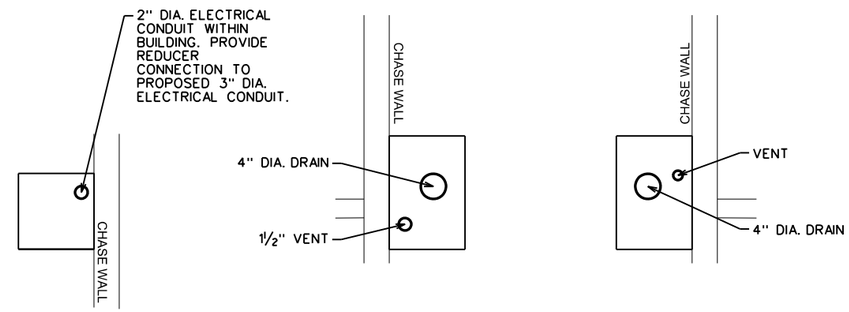

2 U.01 FLOOR OPENING A
NO SCALE

3 U.01 FLOOR OPENING B & C
NO SCALE

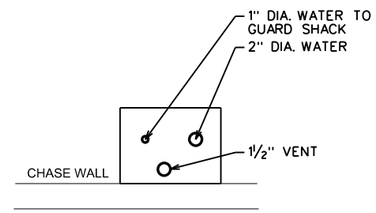

4 U.01 FLOOR OPENING D
NO SCALE

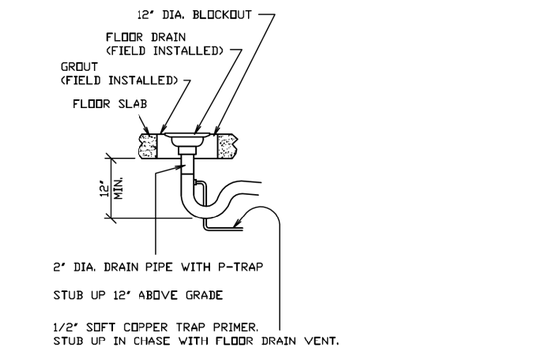

5 U.01 FLOOR OPENING E
NO SCALE

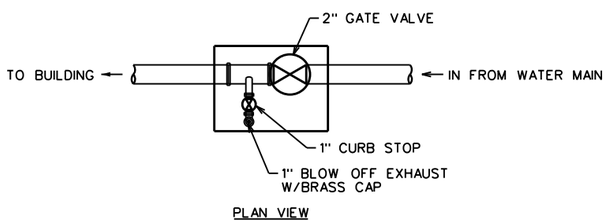

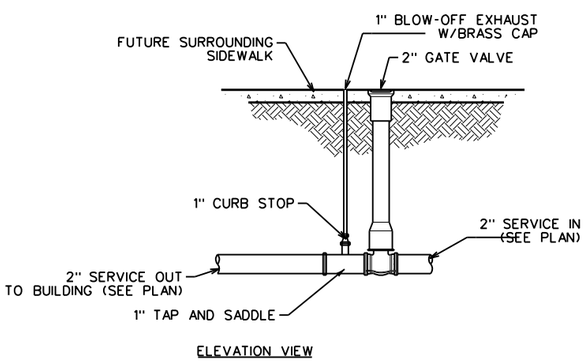

6 U.01 WATER SERVICE BLOW-OFF DETAIL
NO SCALE

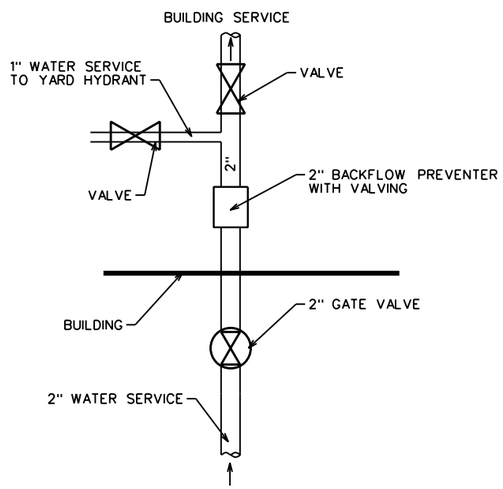

7 U.01 RESTROOM/SHOWER BUILDING INTERNAL WATER SERVICE SCHEMATIC DETAIL
NO SCALE

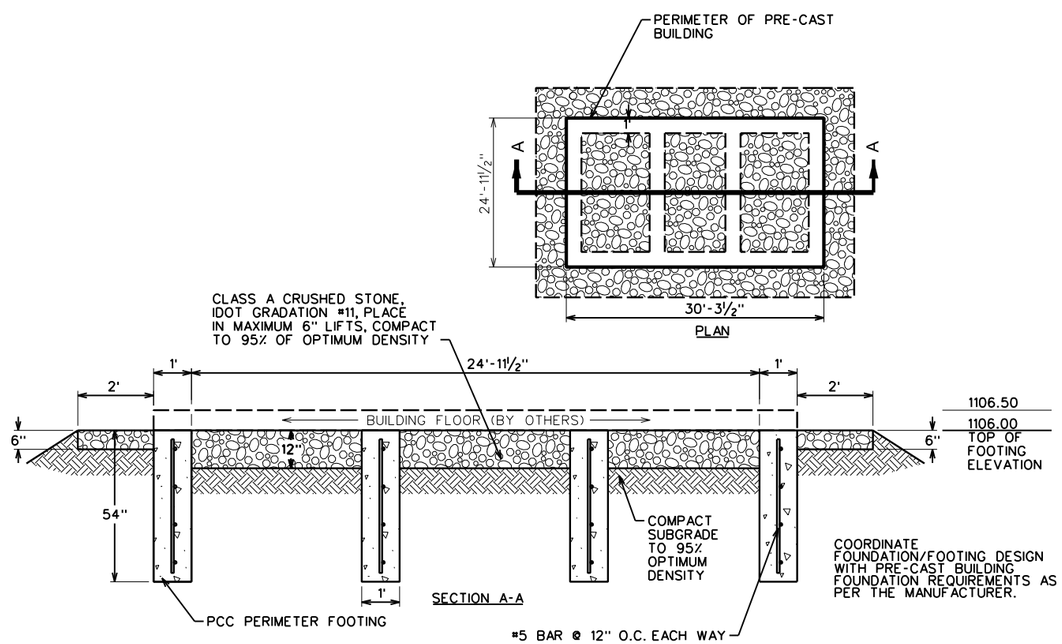

8 U.01 RESTROOM/SHOWER BUILDING PERIMETER FOOTING DETAIL
NO SCALE

MARK	REVISION	DATE	BY

Engineer: WAG | Checked By: CRS | Scale: 1"=
Technician: LFG | Date: 09/23/15 | Field Bk: | Pg:
Project No: 114.0397 | Sheet U.01

WEBSTER COUNTY, IOWA

GYPSUM CITY OHV CAMPGROUND
RESTROOM/SHOWER FACILITY
CONSTRUCTION DETAILS

SNYDER & ASSOCIATES, INC.
2727 S.W. SNYDER BLVD.
ANKENY, IOWA 50023
515-964-2020 | www.snyder-associates.com

Project No: 114.0397
Sheet U.01

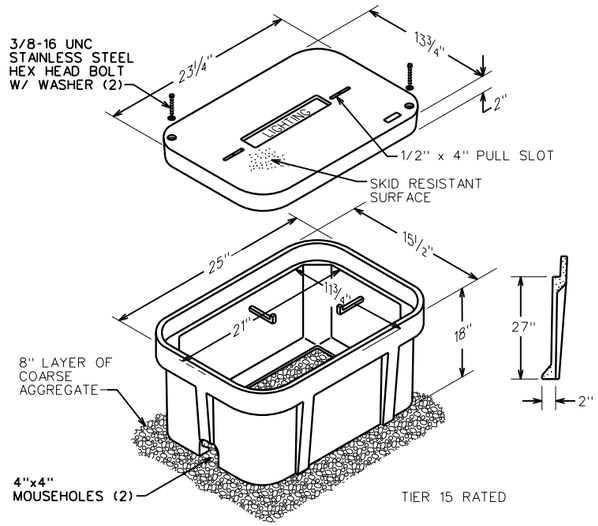

1 U.02 13"x24" - PRE-CAST POLYMER-CONCRETE HANDHOLE

NO SCALE

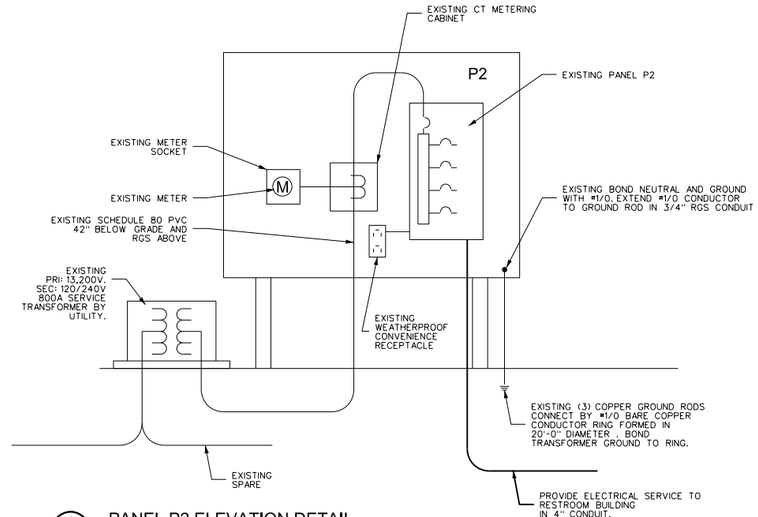

2 U.02 PANEL P2 ELEVATION DETAIL

NO SCALE

EXISTING PANEL P2

TYPE:	120/240	VOLTS 1 PH	3W	**LOCATION:**	OUTSIDE
MAIN BUS:	800A			**MOUNTING:**	SURFACE
M/B FRAME:	800A	TRIPS: 800A		**FEEDER:**	3 SETS 3-300 KCM-CU
A.I.C.:					#1/0 GND
					3 1/2" C.

	DESCRIPTION	LOAD	C/B	NO	NO	C/B	LOAD	DESCRIPTION
	(1) (2) SITE PEDESTAL	28.8	150-2	1	2	150-2	28.8	(1) (2) SITE PEDESTAL
	-	-	-	3	4	-	-	-
	FUTURE SITE PEDESTAL		150-2	5	6	150-2	28.8	(1) (2) SITE PEDESTAL
	-		-	7	8	-	-	-
1	FUTURE GUARD SHACK		150-2	9	10	150-2		FUTURE SITE PEDESTAL
	-		-	11	12	-	-	
2	SHOWER BUILDING		150-2	13	14	20-1	0.4	SITE LIGHTING
	-		-	15	16	20-1	0.2	RECEPTACLE
	SPACE			17	18	20-1		SPARE
	SPACE			19	20	20-1		SPARE
	SPACE			21	22	20-1		SPARE
	SPACE			23	24	20-1		SPARE
	TOTAL LOAD (KW)	28.8		87			58.2	

NOTES: (1): USE 3-4/0 AD #2 GND
(2): PROVIDE SOUTHWIRE ALUMINUM 600V MOBILE HOME FEEDER FOR FIRECT BURIAL OR EQUAL

NOTES:
1. EXISTING "FUTURE SITE PEDESTAL" BREAKER TO BE USED FOR "FUTURE GUARD SHACK" BREAKER.
2. EXISTING "FUTURE SHOWER BUILDING" BREAKER TO BE USED FOR "SHOWER BUILDING" BREAKER CONNECTION.

3 U.02 ELECTRICAL SERVICE CONNECTION DETAIL

NO SCALE

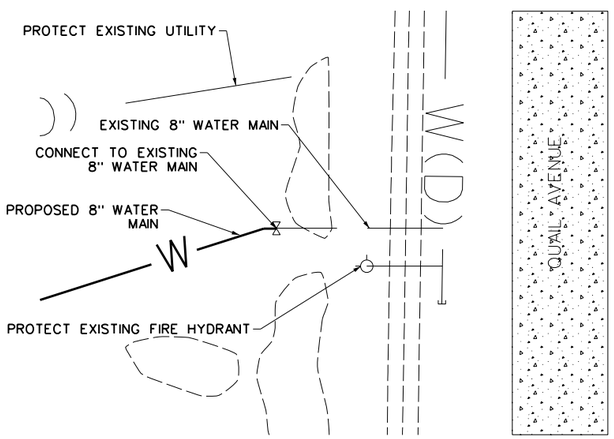

4 U.02 WATER SERVICE CONNECTION DETAIL ALONG QUAIL AVENUE

SCALE: 1"=20'-0"

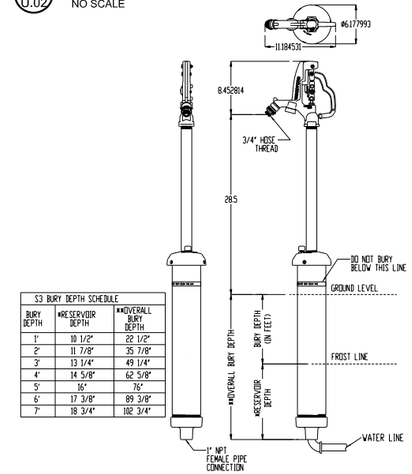

S3 BURY DEPTH SCHEDULE

BURY DEPTH	*RESERVOIR DEPTH	**OVERALL BURY DEPTH
1'	10 1/2"	22 1/2"
2'	11 7/8"	35 7/8"
3'	13 1/4"	49 1/4"
4'	14 5/8"	62 5/8"
5'	16'	76'
6'	17 3/8"	89 3/8"
7'	18 3/4"	102 3/4"

5 U.02 YARD HYDRANT (WOODFORD MODEL S3) DETAIL

NO SCALE

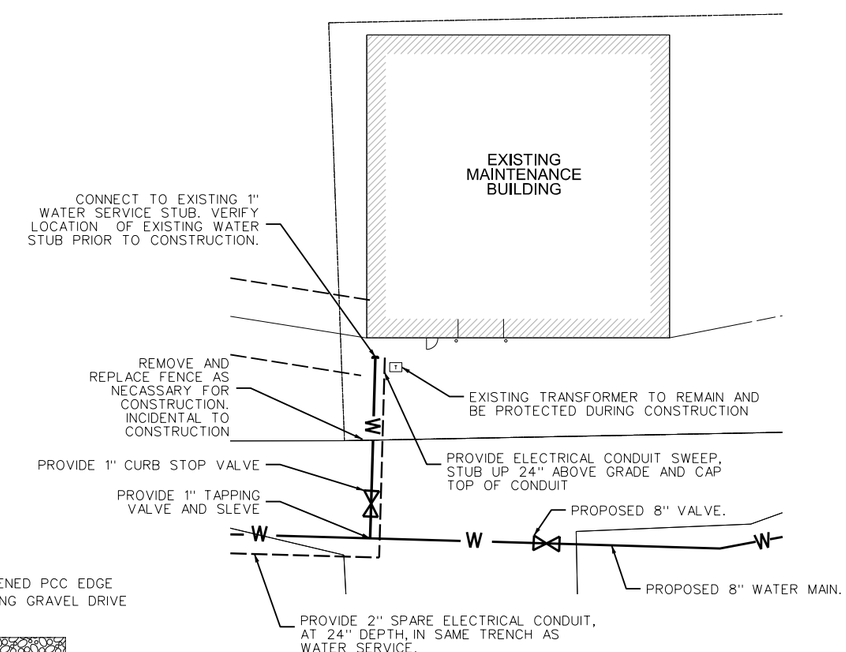

8 U.02 WATER CONNECTION AT MAINTENANCE BUILDING

SCALE: 1"=40'-0"

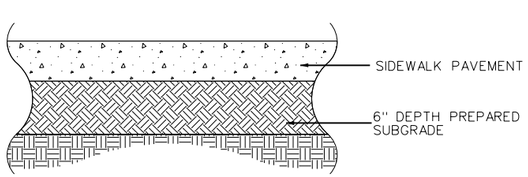

PCC SIDEWALK SECTION

6 U.02 5" DEPTH PCC SIDEWALK DETAIL

NO SCALE

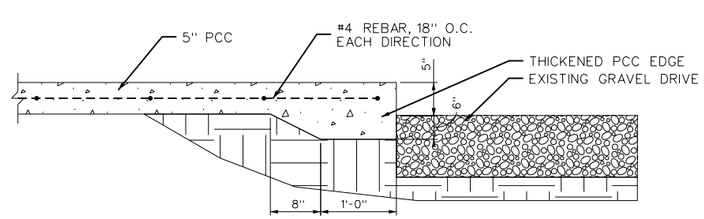

7 U.02 THICKENED EDGE AT EXISTING GRAVEL DRIVE

NO SCALE

MARK	REVISION	DATE	BY

Engineer: WAG | Checked By: CRS | Scale: 1"= | Sheet U.02
Technician: LFG | Date: 09/23/15 | Field Bk: | Pg:
Project No: 114.0397

WEBSTER COUNTY, IOWA

GYPSUM CITY OHV CAMPGROUND RESTROOM/SHOWER FACILITY

CONSTRUCTION DETAILS

SNYDER & ASSOCIATES, INC.
2727 S.W. SNYDER BLVD.
ANKENY, IOWA 50023
515-964-2020 | www.snyder-associates.com

Project No: 114.0397
Sheet U.02