IOWA DEPARTMENT OF NATURAL RESOURCES

CONSTRUCTION DRAWINGS
FOR
STORAGE BUILDING REPLACEMENT
AT
WALNUT WOODS STATE PARK

IOWA ONE CALL
1-800-292-8989
www.iowaonecall.com
811 Know what's below. Call before you dig.

PROJECT # 15-05-77-04

PLANS PREPARED BY
LAND & WATERS BUREAU
CONSERVATION & RECREATION DIVISION

REGISTERED PROFESSIONAL ARCHITECT
RYAN E. RICHEY
06461
IOWA

I hereby certify that this architectural document was prepared by me or under my direct personal supervision and that I am a duly Registered Professional Architect under the laws of the State of Iowa.

RYAN E. RICHEY DATE

My license renewal date is June 30, 2015.

Pages or sheets covered by this seal:

A-001 – A-600

SHEET INDEX

SHEET. NO.	SHEET TITLE
	ARCHITECTURAL
A-001	COVER SHEET
A-002	WALL TYPES, NOTES AND SYMBOLS
A-003	PROJECT LOCATION
A-005	SITE DEMOLITION PLAN
A-010	ARCHITECTURAL SITE PLAN
A-020	LIFE SAFETY PLAN
A-100	REFERENCE FLOOR PLAN
A-110	RCP/LIGHTING/POWER PLAN
A-200	BUILDING ELEVATIONS
A-300	BUILDING SECTIONS
A-600	FINISH, DOOR & WINDOW SCHEDULES

DIRECTORY

OWNER		DNR INSPECTOR	
COMPANY	IOWA DEPARTMENT OF NATURAL RESOURCES	COMPANY	IOWA DEPARTMENT OF NATURAL RESOURCES
ADDRESS	502 E. 9TH. ST.	ADDRESS	–
CITY,STATE,ZIP	DES MOINES, IA 50319	CITY,STATE,ZIP	INDIANOLA, IOWA
CONTACT	N/A	CONTACT	JASON KRUSE
TELEPHONE	515.281.5918	TELEPHONE	515.250.3707
FAX	515.281.6794	FAX	–
EMAIL	N/A	EMAIL	KRUSE.JASON@DNR.IOWA.GOV
ARCHITECT			
COMPANY	IOWA DEPARTMENT OF NATURAL RESOURCES	COMPANY	–
ADDRESS	502 E. 9TH. ST.	ADDRESS	–
CITY,STATE,ZIP	DES MOINES, IA 50319	CITY,STATE,ZIP	–
CONTACT	RYAN RICHEY	CONTACT	–
TELEPHONE	515.979.0107	TELEPHONE	–
FAX	–	FAX	–
EMAIL	RYAN.RICHEY@DNR.IOWA.GOV	EMAIL	–
COMPANY	–	COMPANY	–
ADDRESS	–	ADDRESS	–
CITY,STATE,ZIP	–	CITY,STATE,ZIP	–
CONTACT	–	CONTACT	–
TELEPHONE	–	TELEPHONE	–
FAX	–	FAX	–
EMAIL	–	EMAIL	–
COMPANY	–	COMPANY	–
ADDRESS	–	ADDRESS	–
CITY,STATE,ZIP	–	CITY,STATE,ZIP	–
CONTACT	–	CONTACT	–
TELEPHONE	–	TELEPHONE	–
FAX	–	FAX	–
EMAIL	–	EMAIL	–

PROJECT DATA

OCCUPANT LOAD:

GROUP S-1 – STORAGE / ACCESSORY
STORAGE AREAS – 1,460 GROSS (I.B.C. TABLE 1004.1.1)

STORAGE 1,460 S.F. / 300 = 4.85 = 5 OCCUPANTS

TOTAL OCCUPANT LOAD = 5 OCCUPANTS

REQUIRED FIXTURES:

0 TOTAL WATER CLOSETS

BUILDING DATA

MEANS OF EGRESS:

MIN. REQ'D # OF EXITS = 2 EXITS PER LEVEL (IBC TABLE 1021.1)
MAX TRAVEL DISTANCE = 200' (IBC 1016.1)
DEAD-END CORRIDOR = 20' MAX. (IBC 1018.4)
MIN. CORRIDOR WIDTH = 36" CLEAR
MIN. CLEAR OPENINGS FOR EXIT DOORS = 32" (ACTUAL 34")

FIRE EXTINGUISHERS:
THE NUMBER AND LOCATIONS OF FIRE EXTINGUISHERS TO BE DETERMINED BY THE FIRE MARSHAL PRIOR TO CERTIFICATE OF OCCUPANCY.

BUILDING:

ADDRESS: WALNUT WOODS STATE PARK
3155 WALNUT WOODS DRIVE
WEST DES MOINES, IA 50265
POLK COUNTY
USE – STORAGE
BUILDING CONSTRUCTION – TYPE V-B (W/OUT AUTOMATIC SPRINKLER SYSTEM)
NUMBER OF STORIES – 1 STORY
BUILDING HEIGHT – 18'-4"
BUILDING AREA – 1,460 GSF
BUILDING OCCUPANCY – GROUP S-1, STORAGE

BUILDING CODES

BUILDING CODE – 2009 INTERNATIONAL BUILDING CODE

STRUCTURAL CODE –2009 INTERNATIONAL BUILDING CODE

PLUMBING CODE – 2009 INTERNATIONAL BUILDING CODE

MECHANICAL CODE – 2009 INTERNATIONAL BUILDING CODE

ELECTRICAL CODE – 2009 INTERNATIONAL BUILDING CODE

FIRE PREVENTION CODE – 2009 INTERNATIONAL FIRE PREVENTION CODE

ACCESSIBILITY CODE – 2009 INTERNATIONAL BUILDING CODE, CHAPTER 11

ENERGY CODE – 2009 INTERNATIONAL ENERGY EFFICIENCY CODE

BID ITEMS

ITEM NUMBER	DESCRIPTION	ESTIMATED QUANTITY
1	DEMOLITION OF EXISTING SHOP/GARAGE	1 LUMP SUM
2	NEW ELECTRICAL SERVICE	1 LUMP SUM
3	EROSION CONTROL	1 LUMP SUM
4	PAVEMENT, PCC (6" THICKNESS) WITH REBAR AND SUBBASE	1 LUMP SUM
5	SANITARY SEWER CAPPING	1 LUMP SUM
6	WATER SERVICE CUT-OFF	1 LUMP SUM
7	NEW YARD HYDRANT	1 LUMP SUM
8	FINISHING	1 LUMP SUM
9	NEW STORAGE BUILDING	1 LUMP SUM
10	MOBILIZATION	1 LUMP SUM
11	CONSTRUCTION STAKING	1 LUMP SUM

PROJECT DESCRIPTION

THE CURRENT STORAGE BUILDING AT WALNUT WOODS IS OVER 50 YEARS OLD, HAS ENDURED MULTIPLE FLOODS AND IS NO LONGER SATISFYING THE NEEDS OF THE DEPARTMENT IN IT'S CURRENT CONFIGURATION. THE NEW PROPOSED STORAGE BUILDING WILL HAVE 10' OVERHEAD DOORS, ALLOWING ALL EQUIPMENT TO BE PLACED INSIDE, NEW LIGHTING, BETTER ACCESS TO POWER AND WATER AS WELL AS EASIER ACCESS TO STORED MATERIALS.

AUTHORIZATION TO BID

ENGINEERING BUREAU CHIEF DATE

AUTHORIZED - PARKS | WILDLIFE | FISHERIES | LAW ENFORCEMENT DATE

CONSULTANT:

IOWA DEPARTMENT OF NATURAL RESOURCES
ENGINEERING SERVICES - WALLACE BUILING
502 E. 9TH ST., DES MOINES, IA 50319-0034
P: 515.281.5918
F: 515.281.8685

COVER SHEET

STORAGE BUILDING REPLACEMENT FOR:
WALNUT WOODS SP

POLK COUNTY, IOWA

WALNUT WOODS SP

NO.	BY DATE	REVISION

DRAWN BY: PROJECT NUMBER: 15-05-77-04
CHK'D BY: DATE: 10.01.2014
SHEET No: A-001

DIMENSION NOTES

1. IN INTERIOR SPACES THE ACTUAL DIMENSIONS MAY BE LESS IMPORTANT THAN IF AT TWO ELEMENTS IN THE BUILDING WERE TO BE EQUAL. IN THESE CASES, THE WORD "EQUAL OR EQ" IS USED IN LIEU OF THE ACTUAL DIMENSIONS.
2. WHEN A ROOM CENTERLINE IS INDICATED ONLY ONE SIDE OF THE ROOMS ELEMENTS MAY BE DIMENSIONED.
3. COLUMN IDENTIFICATION: DETAILS WILL GOVERN ALL DIMENSIONS AND NO DIMENSIONS WILL BE SHOWN ON SMALL SCALE PLANS.
4. PARTITION CENTERED ON COLUMN OR GRID LINES WILL NOT BE DIMENSIONED ON SMALL SCALE PLANS.
5. PARTITION WITH A FINISHED FACE FLUSH WITH FINISH FACE OF COLUMN WILL NOT be DIMENSIONED ON SMALL SCALE PLANS.
6. PARTITION FINISH FACE ON COLUMN OR GRID LINE WILL NOT BE DIMENSIONED ON SMALL SCALE PLANS .
7. WHEN ONE JAMB OCCURS AT A COLUMN OR GRID LINE NO DIMENSIONS WILL BE SHOWN ON THE SMALL SCALE PLANS. THE OPENING WIDTH WILL BE GOVERNED BY CRITERIA OR SCHEDULES.
8. WHEN NEITHER JAMB OCCURS AT A COLUMN OR GRID LINE ONE JAMB WILL BE DIMENSIONED.
9. DOOR LOCATIONS ARE TO BE LOCATED BY ONE OF FOLLOWING:
   a. ONE JAMB FACE LOCATED BY A PARTITION AT RIGHT ANGLE. 4"TYPICAL UNLESS INDICATED ON PLAN.
   b. OR AS DIMENSIONED ON PLAN.
10. PARTITIONS ARE DIMENSIONED TO FACE OF CMU OR FACE OF STUD UNLESS OTHERWISE NOTED.
11. DIMENSIONS ARE INDICATED IN THE DOCUMENTS. THE DRAWINGS SHALL NOT BE SCALED FOR DIMENSIONS.

MATERIAL LEGEND

EARTH
COMPACTED EARTH
GRASS
GRAVEL
clay
fence
turf block
pavers
CONCRETE MASONRY UNIT
metal stud
PARTICLE BOARD
PLYWOOD
BATT INSULATION
ACOUSTICAL CEILING TILE
plastic
carpet
GYPSUM / STUCCO
grout
sand
foam INSULATION
RIGID INSULATION
ALUMINUM
STEEL
FINISHED WOOD
brick
CONCRETE
ASPHALT
cast stone
stone
glass
WOOD BLOCKING
CONTINUOUS WOOd

SYMBOL LEGEND

NORTH AARROW

00 TITLE
SCALE: 0 = 0'-0"
DRAWING / DETAIL IDENTIFICATION

00 / A-000
SECTION REFERENCE

00 / A-000
DETAIL REFERENCE

00 / A-000
EXTERIOR ELEVATION

00/A-100
INTERIOR ELEVATION

ELEVATION : 0'-0"
DESCRIPTION1
ELEVATION TARGET

1 / A
COLUMN GRID

00 / A-000
00 / A-000
MATCH LINES

ROOM / 000
ROOM/SPACE IDENTIFICATION

100
DOOR TAG

00
WINDOW TAG

00
WALL TYPE REFERENCE
KEYNOTE NUMBER -NEW
C.S.I. DIVISION/KEY

00
KEYNOTE - DEMOLITION

00
KEYNOTE - NEW/RENOVATION

00
KEYNOTE - FINISH/ACCESSORY

℄
PROPERTY LINE REFERENCE

℄
CENTER LINE REFERENCE

0"
LEVEL CHANGE REFERENCE

DETAIL CUT LINE

1
REVISION NUMBER AND CLOUD

GENERAL NOTES

THE FOLLOWING GENERAL NOTES SHALL PERTAIN TO THE ENTIRE SET OF CONTRACT DOCUMENTS

1. A GENERAL CONTRACTOR SHALL NOTE THAT THE ARCHITECTURAL DRAWINGS ARE ESTABLISHING A MINIMUM MATERIAL OR CONSTRUCTION METHOD STANDARD. THE GENERAL CONTRACTOR SHALL PROVIDE A BID PRICE BASED ON THE SPECIFIC MATERIALS NOTED.
2. DO NOT SCALE DRAWINGS. IF DIMENSIONS ARE IN QUESTION, THE CONTRACTOR SHALL BE RESPONSIBLE FOR OBTAINING CLARIFICATION FROM THE ARCHITECT BEFORE CONTINUING WITH CONSTRUCTION.
3. GENERAL CONTRACTOR AND SUBCONTRACTORS SHALL PERFORM THEIR WORK IN ACCORDANCE WITH ALL APPLICABLE CODES GOVERNING EACH TRADE.
4. THE CONTRACTOR SHALL MAINTAIN A CLEAN AND ORGANIZED JOB SITE, ACCEPTABLE TO THE OWNER.
5. THE CONTRACTOR SHALL COORDINATE THE SEQUENCE OF WORK WITH THE OWNER REPRESENTATIVE..
6. THERE SHALL BE NO DEVIATION BY THE GENERAL CONTRACTOR FROM THE CONSTRUCTION DOCUMENTS UNLESS APPROVED IN WRITING BY THE ARCHITECT.
7. EACH CONTRACTOR SHALL VERIFY EXISTING CONDITIONS IN THE FIELD PRIOR TO THE INITIATION OF WORK AND SHALL NOTIFY THE ARCHITECT OF ANY DISCREPANCIES OR CONDITIONS INTERFERING WITH THE ABILITY OF THE CONTRACTOR TO COMPLETE WORK AS OUTLINED ON THE CONSTRUCTION DRAWINGS.
8. ALL CONTRACTORS ARE REQUIRED TO COORDINATE THEIR WORK WITH OTHER TRADES. LACK OF THIS COORDINATION RESULTING IN ADDED COST TO THE CONTRACT WILL BE BORNE BY THE CONTRACTOR.
9. GENERAL CONTRACTOR SHALL BE RESPONSIBLE FOR KEEPING THE EXISTING BUILDING WATER TIGHT DURING CONSTRUCTION.
10. THE CONTRACTOR WILL VERIFY THAT EXIT EGRESS IS MAINTAINED FOR ALL OCCUPIED AREAS OF THE BUILDING THROUGHOUT ALL PHASES OF CONSTRUCTION.
11. PLAN DIMENSIONS ARE GIVEN TO FACE OF STUD OR BLOCK WALL. "CLEAR" DIMENSIONS ARE GIVEN TO THE FACE
12. THE OWNER WILL ASSUME ALL LIABILITY AND SHALL TAKE PERSONAL RESPONSIBILITY FOR ANY DECISIONS THAT THEY MAKE TO CHANGE OR ALTER THE CONSTRUCTION DOCUMENTS WITHOUT THE ARCHITECT'S WRITTEN APPROVAL.
13. PROTECT ALL EXISTING FINISHES AND MATERIALS TO REMAIN, IN ACCORDANCE WITH ACCEPTABLE TRADE PRACTICES, MANUFACTURER, RECOMMENDATIONS, OR AS DIRECTED BY THE ARCHITECT.
14. CUTTING OF EXISTING CONSTRUCTION FOR THE INSTALLATION OF ALL NEW WORK BY ALL TRADES, AND THE SUBSEQUENT PATCHING THEREOF, SHALL BE THE RESPONSIBILITY OF THE GENERAL CONTRACTOR, WHETHER THE WORK IS DONE BY HIS OWN FORCES OR NOT. GRINDING OF MATERIALS FOR REMOVAL SHALL NOT BE PERMITTED. CUTTING SHALL BE TO STRAIGHT LINE. UNWORKMAN-LIKE CUTTING, DAMAGE RESULTING THEREFROM AND UNACCEPTABLE PATCHING SHALL BE REPAIRED AND/OR REPLACED TO AN ACCEPTABLE CONDITION APPROVED BY THE ARCHITECT. A OWNER PROJECT REPRESENTATIVE SHALL BE NOTIFIED PRIOR TO CUTTING OF ANY STRUCTURAL ITEM (I.E. CONCRETE FLOOR, MASONRY, WALL, ETC.) WITHIN THE EXISTING BUILDING. METHOD OF CUTTING SHALL BE APPROVED BY THE OWNER PROJECT REPRESENTATIVE.
15. PATCHING MATERIAL SHALL MATCH EXISTING ADJACENT MATERIALS AS CLOSELY AS POSSIBLE IN COLOR, PATTERNS, AND/OR TEXTURES.
16. ALL SALVAGE MATERIALS REMOVED SHALL REMAIN THE PROPERTY OF THE OWNER. ALL NON-SALVAGE CONSTRUCTION MATERIALS AND DEBRIS FROM DEMOLITION WORK SHALL BE REMOVED FROM THE SITE AS WORK PROGRESSES, UNLESS OTHERWISE NOTED.
17. ISOLATE ALL DISSIMILAR METALS. G SHALL REQUEST APPROVAL BY THE ARCHITECT FOR MATERIALS USED FOR THIS PURPOSE, PRIOR TO INSTALLATION.
18. SEALANTS SHALL BE COMPATIBLE WITH ADJACENT SURFACE(S) THAT ARE IN CONTACT. REFER TO SPECIFICATIONS FOR APPROVED MANUFACTURERS AND PROCEDURES.
19. CAULK JOINTS OF DISSIMILAR EXPOSED TO VIEW MATERIALS AS REQUIRED BY THE ARCHITECT.
20. ALL DOOR HARDWARE TO BE FL. ADA COMPLIANT.
21. ALL EXTERIOR WALLS, DOORS AND WNDOWS ARE EXISTING U.N.O.
22. ALL FINISHES TO BE PER CLASS INDICATED ON A-004
23. NO CONSTRUCTION SHALL OCCUR WITHOUT SHOP DRAWING APPROVAL. SHOP DRAWINGS TO BE PROVIDED TO ARCHITECT FOR REVIEW UPON BEING REVIEWED AND SIGNED/DATED BY THE GENERAL CONTRACTOR AND SHALL INCLUDE BUT NOT BE LIMITED TO THE FOLLOWING ITEMS:
   - CABINETRY MILLWORK
   - RUNNING TRIM AND CASING PROFILES
   - PAINT/LAMINATE COLOR SAMPLES
   - ACOUSTICAL CEILING AND GRID
   - TOILET ACCESSORIES
   - KITCHEN EQUIPMENT
   - ROOF PENETRATIONS
   - HVAC EQUIPMENT
   - PLUMBING EQUIPMENT AND FIXTURES
   - ELECTRICAL EQUIPMENT AND FIXTURES
24. PRIOR TO COMMENCING WORK, THE CONTRACTOR SHALL SUBMIT (2) COPIES OF MATERIAL SAFETY DATA SHEETS (MSDS) FOR ALL PRODUCTS USED TO PERFORM THE WORK.

ABBREVIATIONS

ABV	ABOVE
AFF	ABOVE FINISH FLOOR
ACT	ACOUSTICAL CEILING TILE
AHU	AIR HANDLER UNIT
AL	ALUMINUM
AB	ANCHOR BOLT
@	AT
BM	BEAM
BRG	BEARING
BLK	BLOCK
BD	BOARD
BTM	BOTTOM
BLDG	BUILDING
BUR	BUILT-UP ROOF
CAB	CABINET
CPT	CARPET
CF	CEILING FINISH
CIP	CAST IN PLACE
CLG	CEILING
CL	CENTER LINE
CT	CERAMIC TILE
CLR	CLEAR
COL	COLUMN
CONC	CONCRETE
CMU	CONCRETE MASONRY UNIT
CONT	CONTINUOUS
CJ	CONTROL JOINT
DIA	DIAMETER
DEMO	DEMOLITION
DR	DOOR
DN	DOWN
DS	DOWNSPOUT
DWG	DRAWINGS
ELEC	ELECTRICAL
EWC	ELECTRIC WATER COOLER
ELEV	ELEVATION
EQ	EQUAL
EXIST	EXISTING
EJ	EXPANSION JOINT
EXT	EXTERIOR
FIN	FINISH
FV	FIELD VERIFY
FE	FIRE EXTINGUISHER
FLR	FLOOR
FD	FLOOR DRAIN
FTG	FOOTING
FR	FIRE RETARDANT
GA	GAUGE
GC	GENERAL CONTRACTOR
GALV	GALVANIZED
GFI	GROUND FAULT INTERRUPT
GYP	GYPSUM
HC	HANDICAPPED
HDW	HARDWARE
HT	HEIGHT
HDR	HEADER
HM	HOLLOW METAL
IC	INSTALLED BY CONTRACTOR
IO	INSTALLED BY OWNER
INSUL	INSULATION
INT	INTERIOR
JAN	JANITOR
JT	JOINT
LAM	LAMINATED
LF	LINEAR FEET
MANUF	MANUFACTURER
MAX	MAXIMUM
MO	MASONRY OPENING
MECH	MECHANICAL
MEMB	MEMBRANE
MTL	METAL
MIN	MINIMUM
N/A	NOT APPLICABLE
NIC	NOT IN CONTRACT
NTS	NOT TO SCALE
#, NO	NUMBER
OA	OVERALL
OC	ON CENTER
OCC	OCCUPANCY
OPNG	OPENING
OPP	OPPOSITE
OH	OVERHANG
PAV	PAVERS
PNT	PAINTED
PR	PAIR
PBO	PURCHASED BY OWNER
PF	PRE-FINISHED/PRIMED
PL	PLATE
PLMB	PLUMBING
PLYWD	PLYWOOD
PT	PRESSURE TREATED
POR	POINT OF REFERENCE
QT	QUARRY TILE
R	RADIUS
RCP	REFLECTED CEILING PLAN
REINF	REINFORCED
RENO	RENOVATION
REQ'D	REQUIRED
RD	ROOF DRAIN
RM	ROOM
RO	ROUGH OPENING
S	STAIN
SECT	SECTION
SIM	SIMILAR
SC	SOLID CORE
ST	STUCCO
SPEC	SPECIFICATION
SF	SQUARE FOOT
SS	STAINLESS STEEL
STL	STEEL
STRUCT	STRUCTURAL
STD	STANDARD
TR	TRUSS
TG	TEMPERED GLASS
TEXT	TEXTURED
TYP	TYPICAL
T&G	TONGUE & GROOVE
T&B	TOP & BOTTOM
UL	UNDERWRITERS LAB
UNO	UNLESS NOTED OTHERWISE
VP	VAPOR BARRIER
VB	VINYL BASE
VCT	VINYL COMPOSITION-TILE
VWC	VINYL WALL COVERING
WC	WATER COOLER
WH	WATER HEATER
WWF	WELDED WIRE FABRIC
WD	WOOD
W/	WITH
W/O	WITHOUT

WALLTYPES

08 NOT USED

07 NOT USED

06 NOT USED

05 NOT USED

WALLTYPES

04 NOT USED

03 NOT USED

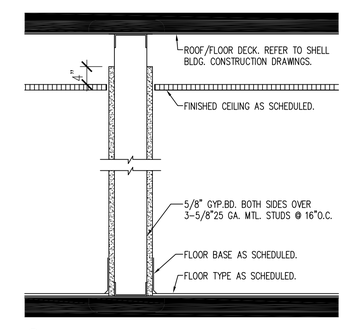

02 INTERIOR PARTITION WALL
2X4 STUD / NON-BEARING / NON-RATED

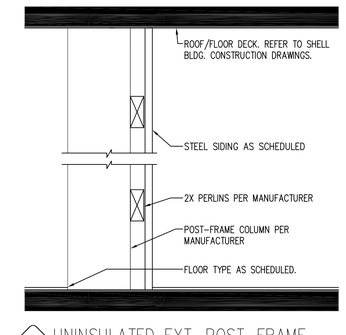

01 UNINSULATED EXT. POST-FRAME
LOAD BEARING/NON-RATED

CONSULTANT:

IOWA DEPARTMENT OF NATURAL RESOURCES
ENGINEERING SERVICES - WALLACE BUILING
502 E. 9TH ST., DES MOINES, IA 50319-0034
P: 515.281.5918
F: 515.281.8685

WALL TYPES, NOTES & SYMBOLS

STORAGE BUILDING REPLACEMENT FOR:
WALNUT WOODS SP

POLK COUNTY, IOWA

WALNUT WOODS SP

NO.	BY / DATE	REVISION

DRAWN BY:
PROJECT NUMBER: 15-05-77-04
CHK'D BY:
DATE: 10.01.2014
SHEET No: A-002

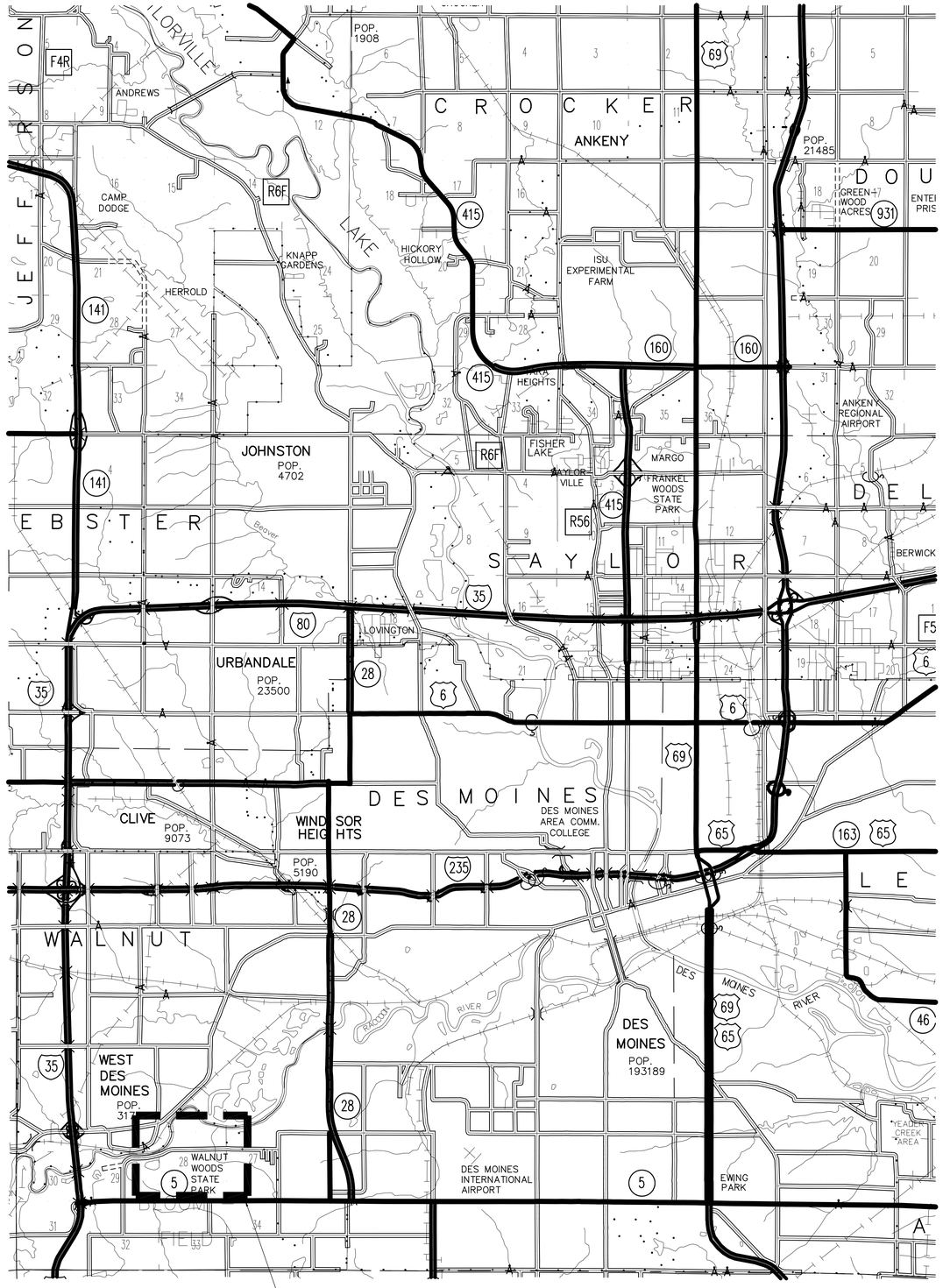

CONSULTANT:

IOWA DEPARTMENT OF NATURAL RESOURCES

ENGINEERING SERVICES - WALLACE BUILING
502 E. 9TH ST., DES MOINES, IA 50319-0034
P: 515.281.5918
F: 515.281.8685

PROJECT LOCATION

STORAGE BUILDING REPLACEMENT FOR:

WALNUT WOODS SP

POLK COUNTY, IOWA

WALNUT WOODS SP

NO.	BY DATE	REVISION

DRAWN BY:

PROJECT NUMBER: 15-05-77-04

CHK'D BY:

DATE: 10.01.2014

SHEET No:

A-003

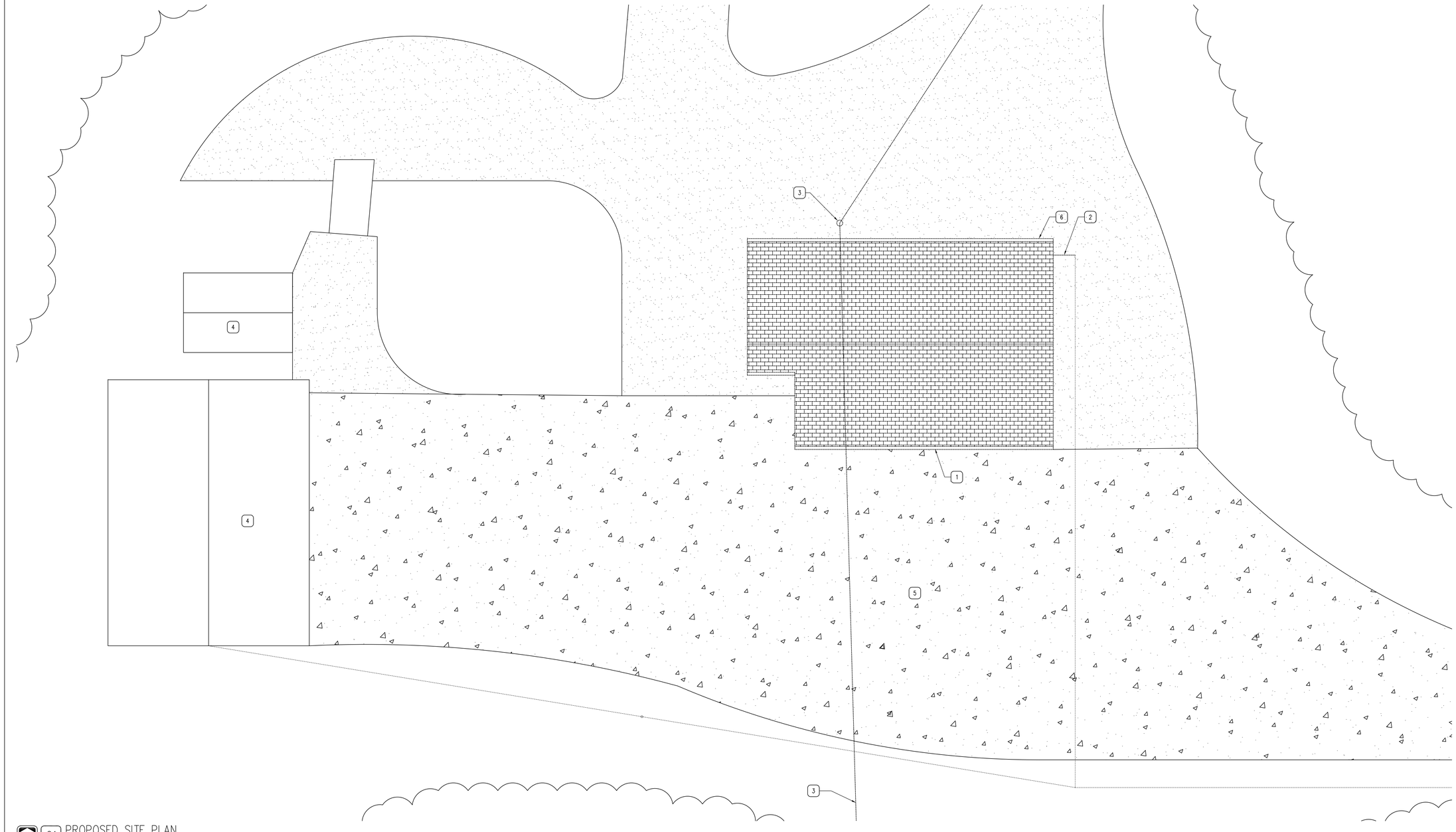

01 PROPOSED SITE PLAN
SCALE: 3/32 = 1'-0"

KEYNOTES

1. DEMOLISH AND REMOVE EXISTING BUILDING, INCLUDING BUILDING SLAB AND FOUNDATION.
2. CAP AND PRESERVE WATER LINE.
3. COORDINATE WITH MIDAMERICAN ENERGY REGARDING REMOVAL OF EXISTING POWER POLE AND POWER SUPPLY AND HOOK-UP OF NEW POWER SUPPLY.
4. EXISTING BUILDING TO REMAIN.
5. EXISTING PAVING TO REMAIN.
6. EXISTING SEWER LINE TO BE LOCATED, PLUGGED AND CAPPED.

GENERAL NOTES

A. REFER TO FINISH & DOOR SCHEDULE, SHEET A-600.
B. ALL ELECTRICAL SHALL BE NEC 2010 AND NFPA 70 COMPLIANT AND UP TO ALL CODES AND ORDINANCES REQUIRED BY LAW. ALL OUTLETS TO BE MOUNTED AT 42" ABOVE FINISHED FLOOR.
C. REFER TO REFLECTED CEILING PLAN FOR CEILING HEIGHTS, SHEET A-110.
D. REFER TO INDEX SHEET FOR WALL TYPES, SHEET A-002.
E. FIELD VERIFY ALL DIMENSIONS PRIOR TO CONSTRUCTION A-101.
F. FIELD VERIFY EQUIPMENT LOCATIONS FIR ELECTRICAL OUTLET LOCATIONS. REFER TO ELECTRICAL PLANS.
G. REFER TO FINISH SCHEDULE SHEET FOR COLOR AND MATERIAL SECTIONS, SHEER A-600.
H. CONTRACTOR TO HAVE THIS BUILDING, PRIOR TO CONSTRUCTION PRE-ENGINEERED BY BUILDING SUPPLIER.

CONSULTANT:

IOWA DEPARTMENT OF NATURAL RESOURCES
ENGINEERING SERVICES - WALLACE BUILING
502 E. 9TH ST., DES MOINES, IA 50319-0034
P: 515.281.5918
F: 515.281.8685

DEMOLITION SITE PLAN

STORAGE BUILDING REPLACEMENT FOR:
WALNUT WOODS SP

POLK COUNTY, IOWA

WALNUT WOODS SP

NO.	BY DATE	REVISION

DRAWN BY:
PROJECT NUMBER: 15-05-77-04
CHK'D BY:
DATE: 10.01.2014
SHEET No:
A-005

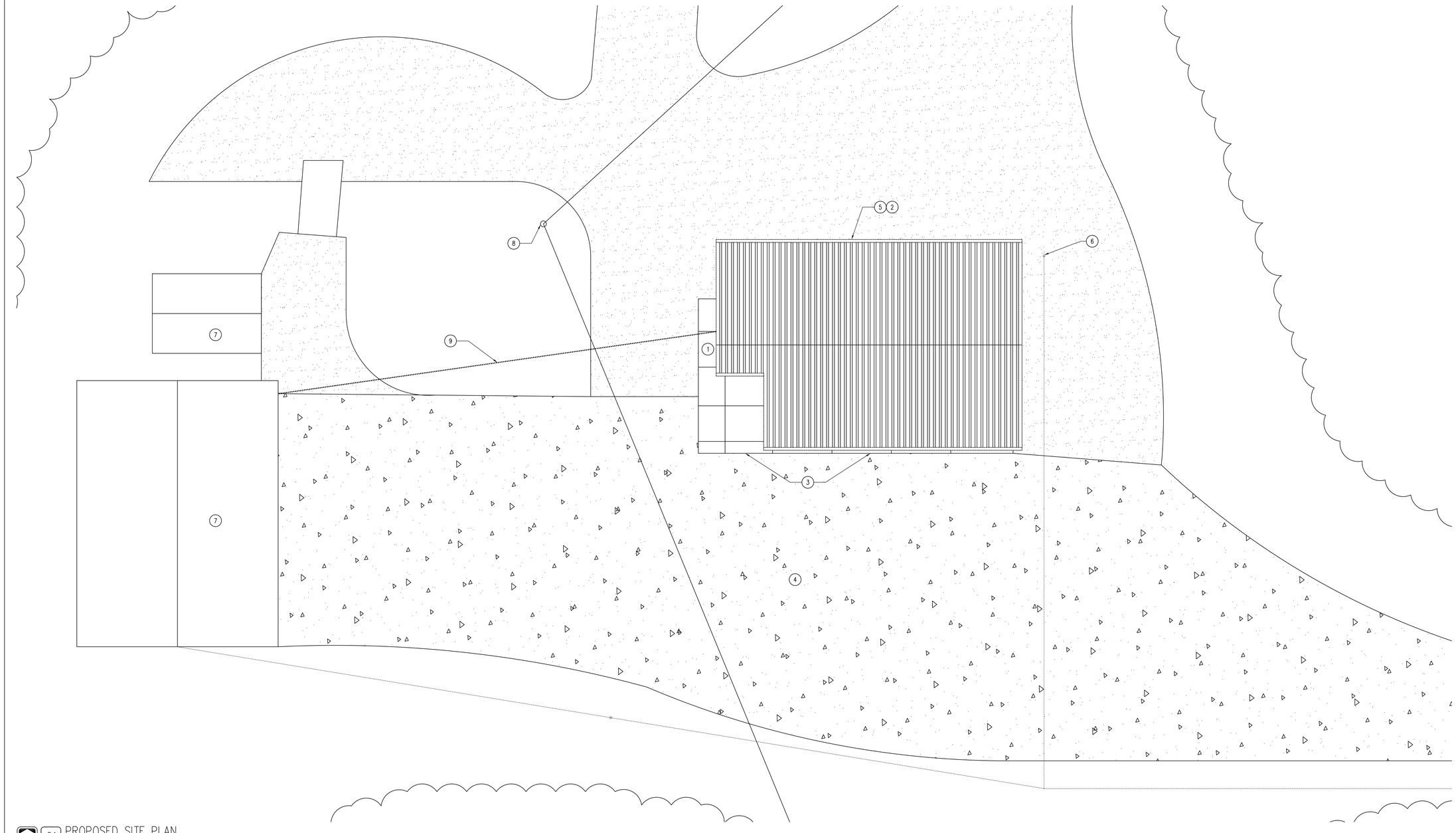

01 PROPOSED SITE PLAN
SCALE: 3/32 = 1'-0"

KEYNOTES

1. NEW 6" THICK 5'-0" WIDE ACCESSIBLE CONCRETE PEDESTRIAN PATHWAY, #4 REBAR 24" O.C. BOTH DIRECTIONS WITH 4" SUBBASE. DOWEL INTO BUILDING SLAB 24" O.C.
2. PROPOSED BUILDING. REFER TO REFERENCE PLAN SHEET A-100.
3. 6" CONCRETE GARAGE APRON WITH #4 REBAR 24" O.C. BOTH DIRECTIONS. EXTEND APRON ENTIRE LENGTH OF BUILDING.
4. EXISTING CONCRETE DRIVE TO REMAIN.
5. MATCH EXISTING FLOOR ELEVATION FOR NEW CONCRETE FLOOR.
6. NEW YARD HYDRANT, REFER TO 04/A-300 FOR DETAILS.
7. EXISTING BUILDING TO REMAIN.
8. CONTRACTOR TO COORDINATE WITH MIDAMERICAN ON OVER-HEAD ELECTRICAL LINE RELOCATION AND SERVICE INTO BUILDING.
9. NEW ELECTRICAL SERVICE TO BUILDING SHALL BE UNDERGROUND FROM EXISTING SHOP PANEL WITH NEW METER PER MIDAMERICAN ENERGY'S SPECIFICATIONS.

GENERAL NOTES

A. REFER TO FINISH & DOOR SCHEDULE, SHEET A-600.
B. ALL ELECTRICAL SHALL BE NEC 2010 AND NFPA 70 COMPLIANT AND UP TO ALL CODES AND ORDINANCES REQUIRED BY LAW. ALL OUTLETS TO BE MOUNTED AT 42" ABOVE FINISHED FLOOR.
C. REFER TO REFLECTED CEILING PLAN FOR CEILING HEIGHTS, SHEET A-110.
D. REFER TO INDEX SHEET FOR WALL TYPES, SHEET A-002.
E. FIELD VERIFY ALL DIMENSIONS PRIOR TO CONSTRUCTION A-101.
F. FIELD VERIFY EQUIPMENT LOCATIONS FIR ELECTRICAL OUTLET LOCATIONS. REFER TO ELECTRICAL PLANS.
G. REFER TO FINISH SCHEDULE SHEET FOR COLOR AND MATERIAL SECTIONS, SHEER A-600.
H. CONTRACTOR TO HAVE THIS BUILDING, PRIOR TO CONSTRUCTION PRE-ENGINEERED BY BUILDING SUPPLIER.

CONSULTANT:

IOWA DEPARTMENT OF NATURAL RESOURCES
ENGINEERING SERVICES - WALLACE BUILING
502 E. 9TH ST., DES MOINES, IA 50319-0034
P: 515.281.5918
F: 515.281.8685

ARCHITECTURAL SITE PLAN

STORAGE BUILDING REPLACEMENT FOR:
WALNUT WOODS SP

POLK COUNTY, IOWA

WALNUT WOODS SP

NO.	BY / DATE	REVISION

DRAWN BY:
PROJECT NUMBER: 15-05-77-04
CHK'D BY:
DATE: 10.01.2014
SHEET No:
A-010

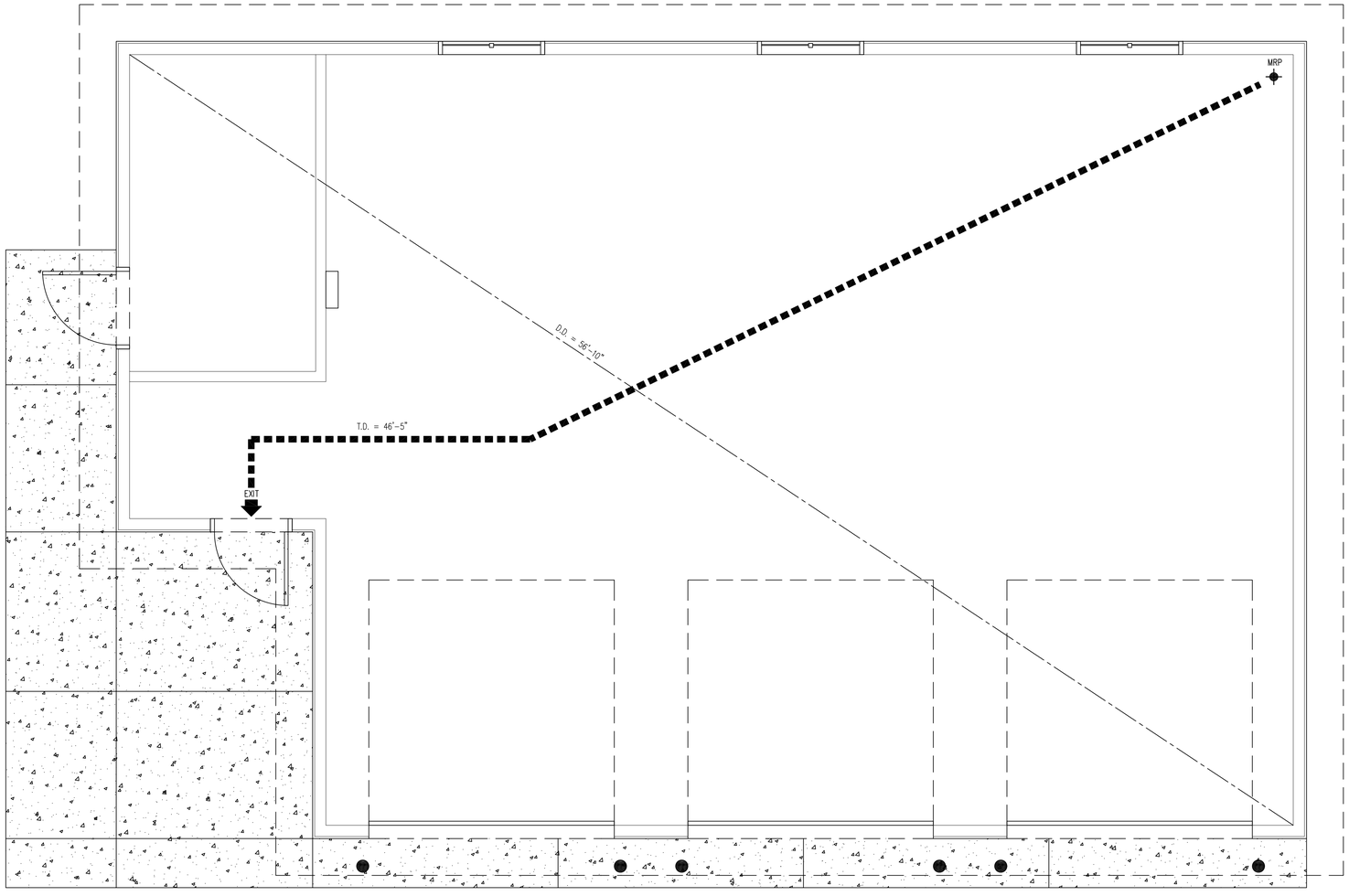

01 LIFE SAFETY PLAN
SCALE: 3/8" = 1'-0"

CODE SUMMARY

BUILDING AREA	1,460 GSF
CONSTRUCTION TYPE	V-B WITHOUT SPRINKLER SYSTEM
OCCUPANCY	GROUP S-1 – STORAGE

	REQUIRED	PROVIDED
ALLOWABLE BLDG AREA (IBC TBL 503)	17,500 SF	1,460 SF
HEIGHT LIMITATION (IBC TBL 503)	2 STORIES (40')	1 STORIES (18')
AUTOMATIC SPRINKLER SYSTEM (NFPA 13)	NO	NO
EXIT ACCESS TRAVEL DISTANCE (IBC 1016.1)	200'-0"	46'-5"
EXIT ACCESS DOORWAYS (IBC TBL 1019.1)	2	1
EGRESS WIDTH PER OCCUPANT (IBC TBL 1005.1) LEVEL [.2"]	(.2") X 5 = 1.0"	1 DOORS @ 36"= 36"

LIFE SAFETY LEGEND

SYMBOL	DESCRIPTION	LINE TYPE
D.E.	EXIT TO EXIT IN LINEAR FEET	
T.D.	TRAVEL DISTANCE FROM M.R.P.	
D.D.	DIAGONAL DISTANCE	
	EXIT LIGHT	
M.R.P.	MOST REMOTE POINT	
	EXIT / ENTRY	
FEC	FIRE EXTINGUISHER	

GENERAL NOTES

a. INFORMATION PROVIDED ON THE LIFE SAFETY PLAN INDICATES EGRESS REQUIREMENTS.
b. ALL CODE REFERENCES ARE FROM INTERNATIONAL BUILDING CODE, W/ AMENDMENTS UNLESS OTHERWISE NOTED

CONSULTANT:

IOWA DEPARTMENT OF NATURAL RESOURCES
ENGINEERING SERVICES - WALLACE BUILING
502 E. 9TH ST., DES MOINES, IA 50319-0034
P: 515.281.5918
F: 515.281.8685

LIFE SAFETY PLAN

STORAGE BUILDING REPLACEMENT FOR:
WALNUT WOODS SP

POLK COUNTY, IOWA

WALNUT WOODS SP

NO.	BY DATE	REVISION

DRAWN BY:
PROJECT NUMBER: 15-05-77-04
CHK'D BY:
DATE: 10.01.2014
SHEET No:
A-020

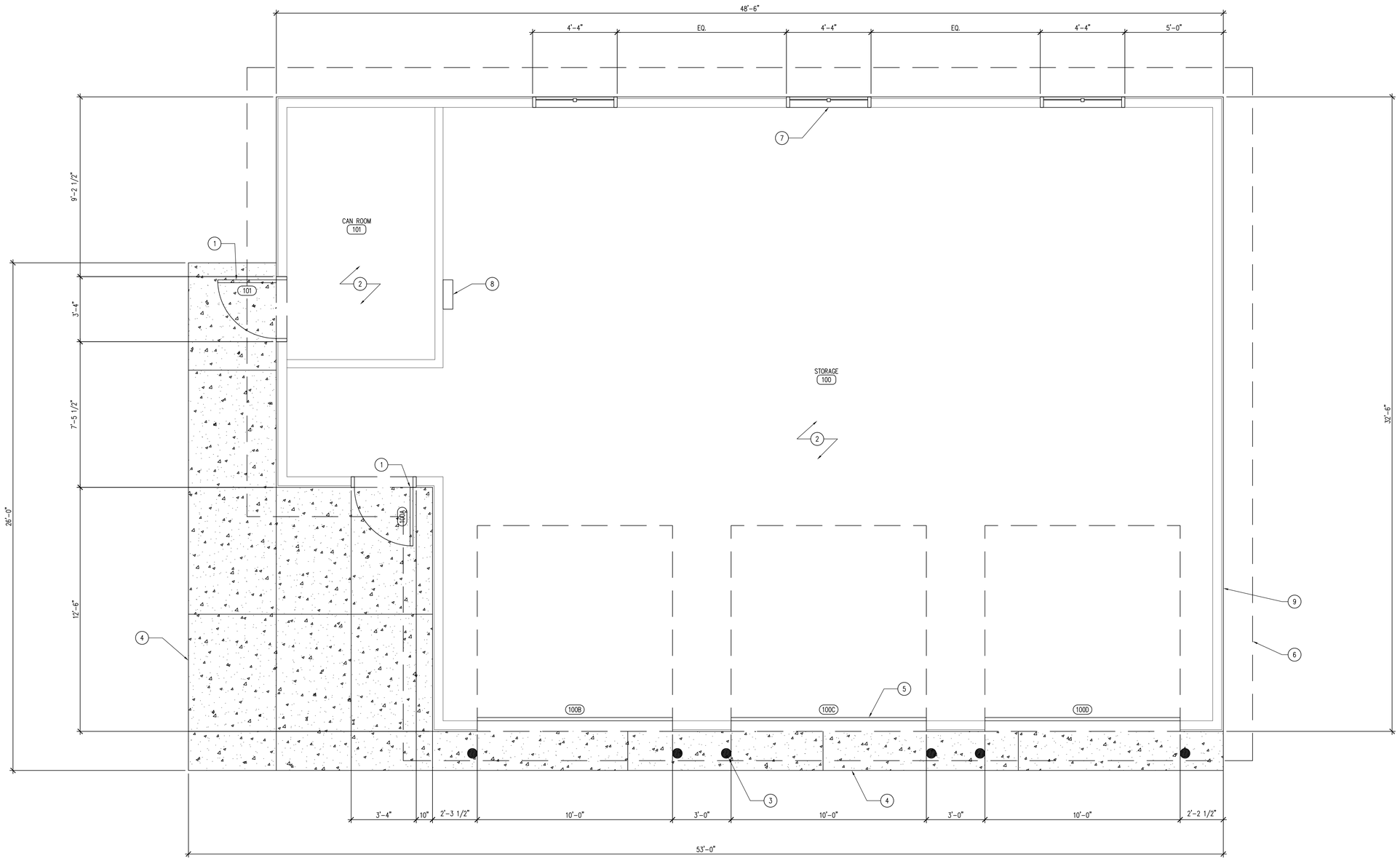

01 REFERENCE FLOOR PLAN
SCALE: 3/8" = 1'-0"

KEYNOTES

1. DOOR AS SCHEDULED, REFER TO SHEET A-600.
2. FLOOR FINISH AS SCHEDULED. REFER TO ROOM FINISH SCHEDULE SHEET A-600.
3. STEEL TRAFFIC BOLLARDS WITH PLASTIC PROTECTION SLEEVE, REFER TO DETAIL 02/A-200.
4. 6" CONCRETE SLAB APRON WITH #4 REBAR 24" O.C. BOTH DIRECTIONS, TO EXTEND ENTIRE LENGTH OF BUILDING.
5. OVERHEAD GARAGE DOOR. REFER TO DOOR SCHEDULE SHEET A-600.
6. ROOF LINE ABOVE.
7. ANDERSEN 100 GLIDER WINDOWS AS SCHEDULED.
8. ELECTRICAL BREAKER PANEL, REFER TO ELECTRICAL DRAWINGS FOR MORE INFORMATION.
9. POST-FRAME BUILDING WITH 26 GAUGE MCELROY MAX-RIB ULTRA, COLOR TBD.

GENERAL NOTES

A. REFER TO FINISH & DOOR SCHEDULE, SHEET A-600.
B. ALL ELECTRICAL SHALL BE NEC 2010 AND NFPA 70 COMPLIANT AND UP TO ALL CODES AND ORDINANCES REQUIRED BY LAW. ALL OUTLETS TO BE MOUNTED AT 42" ABOVE FINISHED FLOOR.
C. REFER TO REFLECTED CEILING PLAN FOR CEILING HEIGHTS, SHEET A-110.
D. REFER TO INDEX SHEET FOR WALL TYPES, SHEET A-002.
E. FIELD VERIFY ALL DIMENSIONS PRIOR TO CONSTRUCTION A-101.
F. FIELD VERIFY EQUIPMENT LOCATIONS FIR ELECTRICAL OUTLET LOCATIONS. REFER TO ELECTRICAL PLANS.
G. REFER TO FINISH SCHEDULE SHEET FOR COLOR AND MATERIAL SECTIONS, SHEER A-600.
H. CONTRACTOR TO HAVE THIS BUILDING, PRIOR TO CONSTRUCTION PRE-ENGINEERED BY BUILDING SUPPLIER.

CONSULTANT:

IOWA DEPARTMENT OF NATURAL RESOURCES
ENGINEERING SERVICES - WALLACE BUILING
502 E. 9TH ST., DES MOINES, IA 50319-0034
P: 515.281.5918
F: 515.281.8685

REFERENCE FLOOR PLAN

STORAGE BUILDING REPLACEMENT FOR:
WALNUT WOODS SP

POLK COUNTY, IOWA

WALNUT WOODS SP

NO.	BY / DATE	REVISION

DRAWN BY:
PROJECT NUMBER: 15-05-77-04
CHK'D BY:
DATE: 10.01.2014
SHEET No: **A-100**

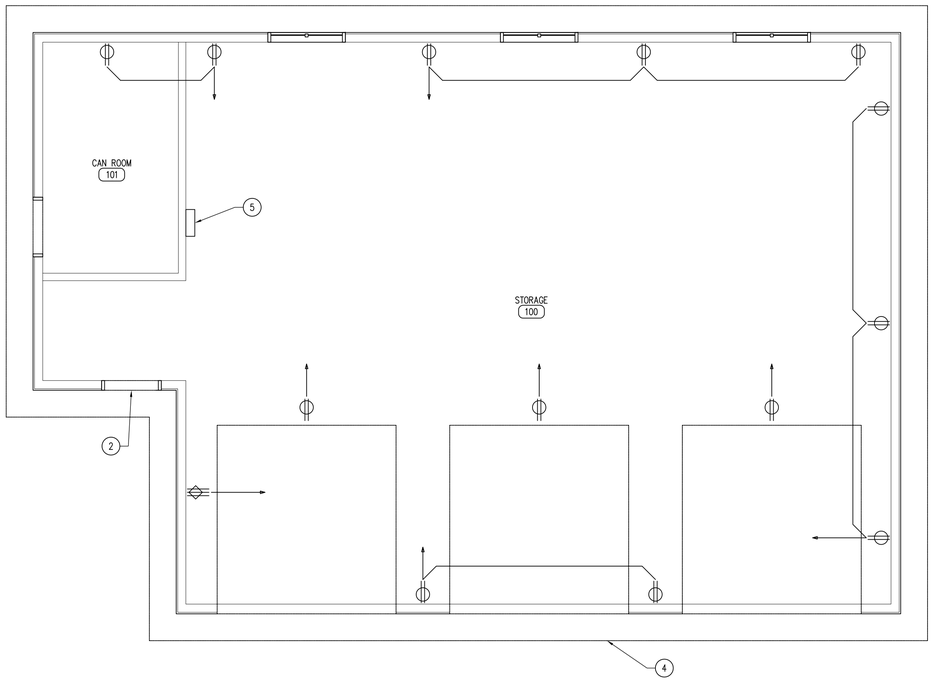

02 POWER PLAN
SCALE: 1/4" = 1'-0"

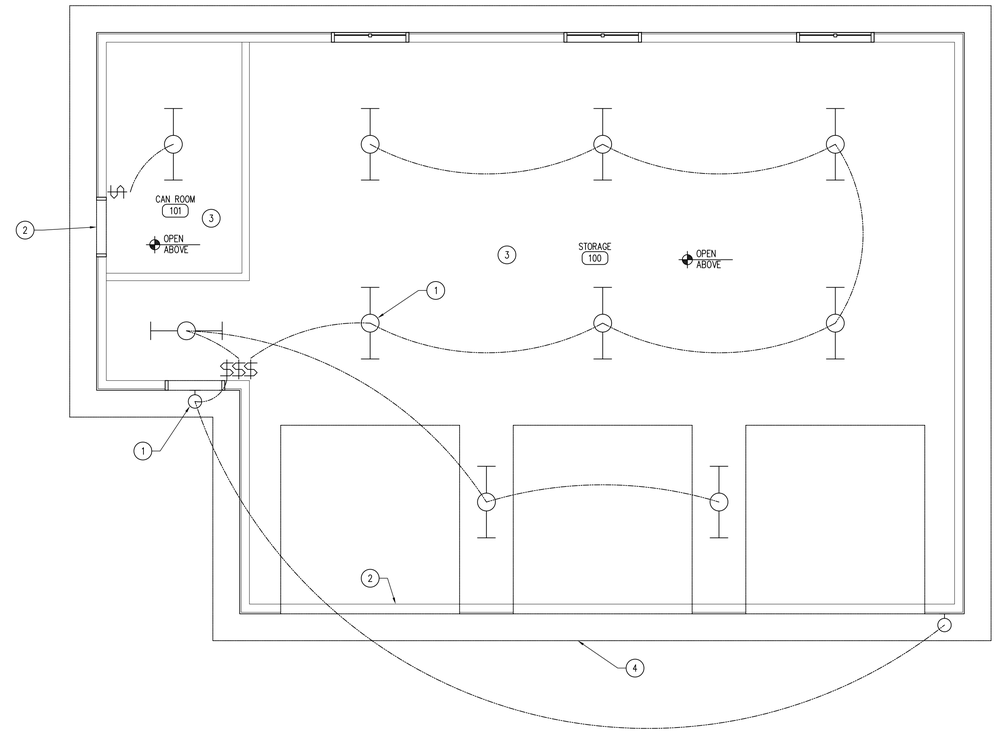

01 LIGHTING PLAN
SCALE: 1/4" = 1'-0"

ELECTRICAL LEGEND

- 120 OUTLET
- 240 OUTLET – COORDINATE EXACT LOCATIONS WITH INSPECTOR
- BACK TO PANEL – ON SINGLE BREAKER
- 100 AMP SERVICE PANEL – COMPLY WITH ALL NEC 2010 CODE REQUIREMENTS

LIGHTING LEGEND

- 2 X 4 FLUORESCENT LIGHT FIXTURE: 4 LAMP, 32 WATT, LITHONIA AF10432
- SECURITY WALL PACK: GARDCO LED WALL-PACK: 121-MR-4-75LA-NW-UNIV-BPR-PCB (DARK BRONZE)
- SINGLE-POLE LIGHT SWITCH

KEYNOTES

1. ELECTRICAL LIGHT FIXTURE. REFER TO ELECTRICAL DRAWINGS FOR FIXTURE SPECIFICATIONS AND POWER REQUIREMENTS.
2. DOOR HEADER BELOW.
3. NO CEILING – OPEN TO STRUCTURE ABOVE.
4. FLUSH SOFFIT PANELS TO MATCH STANDING SEAM METAL ROOF.
5. NEW BREAKER 100 AMP BREAKER PANEL.

GENERAL NOTES

A. REFER TO FINISH & DOOR SCHEDULE, SHEET A-600.
B. ALL ELECTRICAL SHALL BE NEC 2010 AND NFPA 70 COMPLIANT AND UP TO ALL CODES AND ORDINANCES REQUIRED BY LAW. ALL OUTLETS TO BE MOUNTED AT 42" ABOVE FINISHED FLOOR.
C. REFER TO REFLECTED CEILING PLAN FOR CEILING HEIGHTS, SHEET A-110.
D. REFER TO INDEX SHEET FOR WALL TYPES, SHEET A-002.
E. FIELD VERIFY ALL DIMENSIONS PRIOR TO CONSTRUCTION A-101.
F. FIELD VERIFY EQUIPMENT LOCATIONS FIR ELECTRICAL OUTLET LOCATIONS. REFER TO ELECTRICAL PLANS.
G. REFER TO FINISH SCHEDULE SHEET FOR COLOR AND MATERIAL SECTIONS, SHEER A-600.
H. CONTRACTOR TO HAVE THIS BUILDING, PRIOR TO CONSTRUCTION PRE-ENGINEERED BY BUILDING SUPPLIER.

CONSULTANT:

IOWA DEPARTMENT OF NATURAL RESOURCES
ENGINEERING SERVICES - WALLACE BUILING
502 E. 9TH ST., DES MOINES, IA 50319-0034
P: 515.281.5918
F: 515.281.8685

RCP / LIGHTING / POWER PLAN

STORAGE BUILDING REPLACEMENT FOR:
WALNUT WOODS SP

POLK COUNTY, IOWA

WALNUT WOODS SP

NO.	BY / DATE	REVISION

DRAWN BY:
PROJECT NUMBER: 15-05-77-04
CHK'D BY:
DATE: 10.01.2014
SHEET No:

A-110

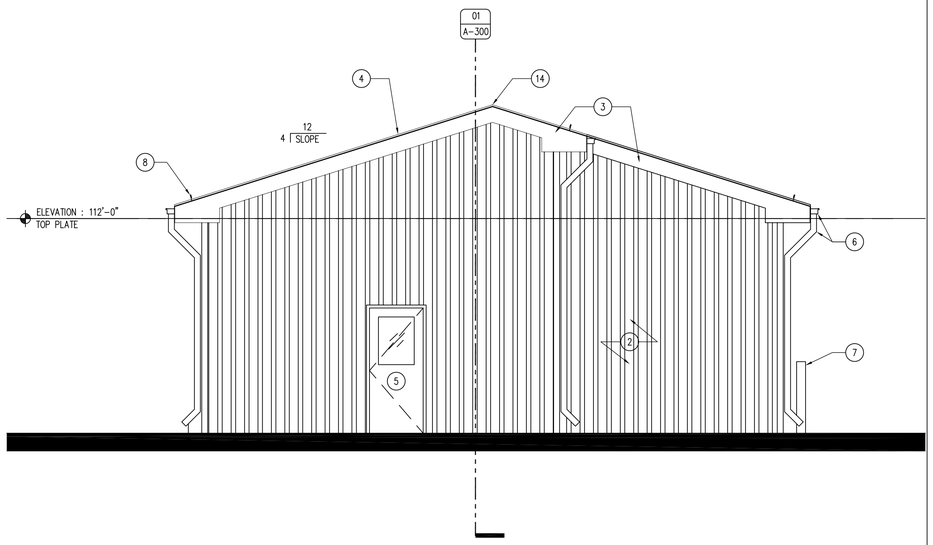

04 BUILDING ELEVATION – WEST
SCALE: 1/4" = 1'-0"

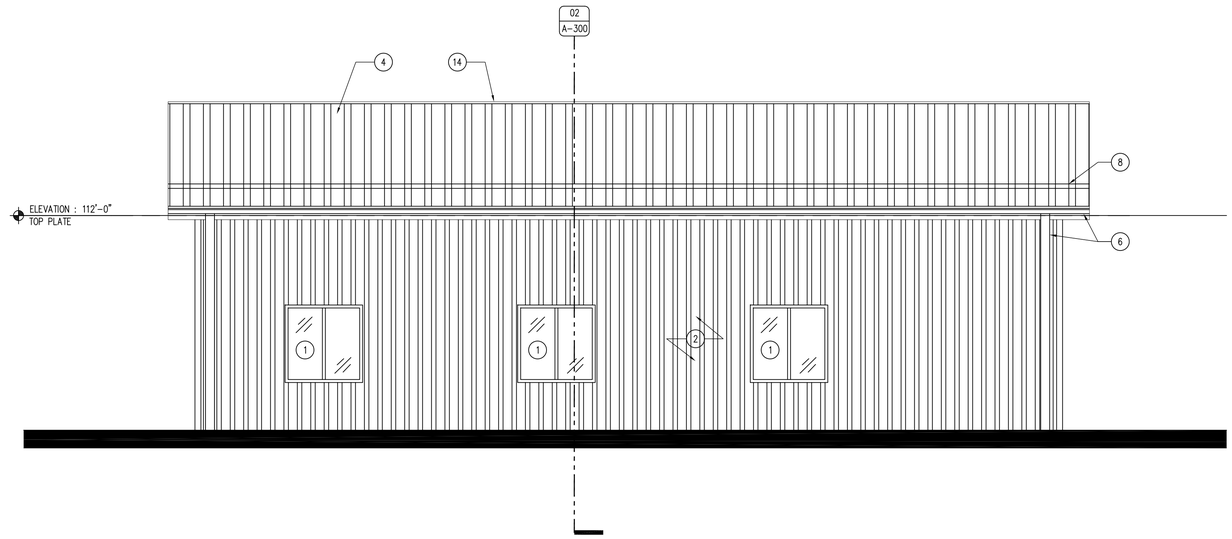

03 BUILDING ELEVATION – NORTH
SCALE: 1/4" = 1'-0"

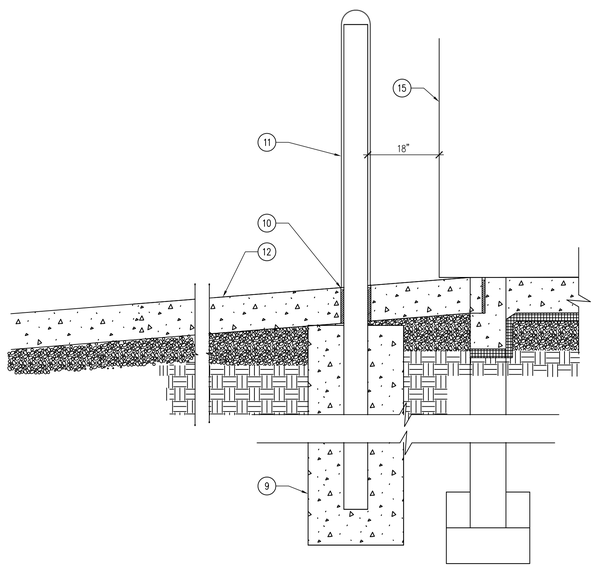

02 DETAIL – BOLLARD
SCALE: NTS = 1'-0"

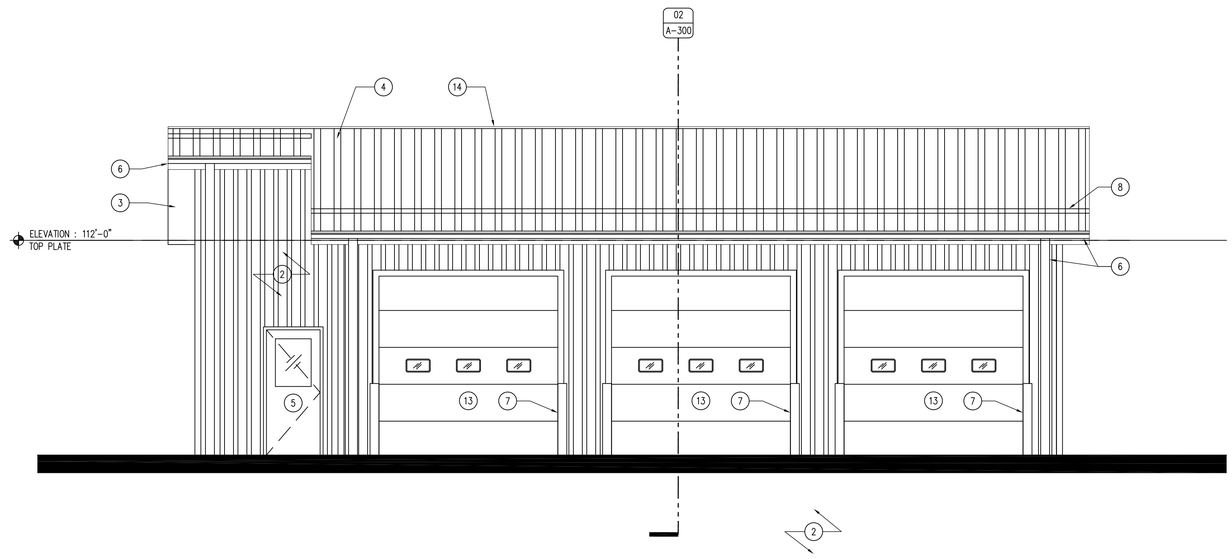

01 BUILDING ELEVATION – SOUTH
SCALE: 1/4" = 1'-0"

KEYNOTES

1. ANDERSEN 100 SERIES WINDOW AS SCHEDULED, DARK BRONZE. REFER TO SHEET A-600.
2. MCELROY MAX-RIB ULTRA WITH KYNAR 500 COATING, SURREY BEIGE.
3. VENTED SOFFIT AND FASCIA METAL PANEL. COLOR TO MATCH ROOF.
4. MCELROY MEDALLION-LOK 24 GA. STANDING SEAM METAL ROOF. COLOR TO BE DARK BRONZE.
5. DOOR AS SCHEDULED. REFER TO SHEET A-600.
6. STANDARD 6" METAL GUTTER AND DOWNSPOUT SYSTEM TO MATCH ROOF, FASCIA AND SOFFIT.
7. TRAFFIC BOLLARD WITH PLASTIC COVER SLEEVE, SEE DETAIL 02/A-200.
8. METAL SNOW GUARD BAR OVER ENTIRE PERIMETER OF ROOF, MATCH COLOR OF ROOF.
9. 24" DIAMETER CONCRETE FOOTING, MINIMUM 48" DEEP.
10. 1/2" EXPANSION JOINT WITH CONTINUOUS SEALANT.
11. 6" DIAMETER X 5/16" THICK STEEL POST 7'-0" LONG EMBEDDED IN CONCRETE FOOTING, FILL POST SOLID WITH CONCRETE GROUT. PROVIDE OSHA YELLOW PLASTIC BOLLARD COVER SLEEVE.
12. 6" THICK CONCRETE APRON, WITH 6" SUB-BASE AND #4 REBAR 24" O.C. BOTH DIRECTIONS.
13. OVERHEAD GARAGE DOOR, REFER TO DOOR SCHEDULE A-600.
14. ROOF VENT, BY ROOFING MANUFACTURER.
15. POST-FRAME BUILDING.

GENERAL NOTES

A. REFER TO FINISH & DOOR SCHEDULE, SHEET A-600.
B. ALL ELECTRICAL SHALL BE NEC 2010 AND NFPA 70 COMPLIANT AND UP TO ALL CODES AND ORDINANCES REQUIRED BY LAW. ALL OUTLETS TO BE MOUNTED AT 42" ABOVE FINISHED FLOOR.
C. REFER TO REFLECTED CEILING PLAN FOR CEILING HEIGHTS, SHEET A-110.
D. REFER TO INDEX SHEET FOR WALL TYPES, SHEET A-002.
E. FIELD VERIFY ALL DIMENSIONS PRIOR TO CONSTRUCTION A-101.
F. FIELD VERIFY EQUIPMENT LOCATIONS FIR ELECTRICAL OUTLET LOCATIONS. REFER TO ELECTRICAL PLANS.
G. REFER TO FINISH SCHEDULE SHEET FOR COLOR AND MATERIAL SECTIONS, SHEER A-600.
H. CONTRACTOR TO HAVE THIS BUILDING, PRIOR TO CONSTRUCTION PRE-ENGINEERED BY BUILDING SUPPLIER.

CONSULTANT:

IOWA DEPARTMENT OF NATURAL RESOURCES
ENGINEERING SERVICES - WALLACE BUILING
502 E. 9TH ST., DES MOINES, IA 50319-0034
P: 515.281.5918
F: 515.281.8685

EXTERIOR ELEVATIONS AND DETAILS

STORAGE BUILDING REPLACEMENT FOR:
WALNUT WOODS SP

POLK COUNTY, IOWA

WALNUT WOODS SP

NO.	BY / DATE	REVISION

DRAWN BY:
PROJECT NUMBER: 15-05-77-04
CHK'D BY:
DATE: 10.01.2014
SHEET No:

A-200

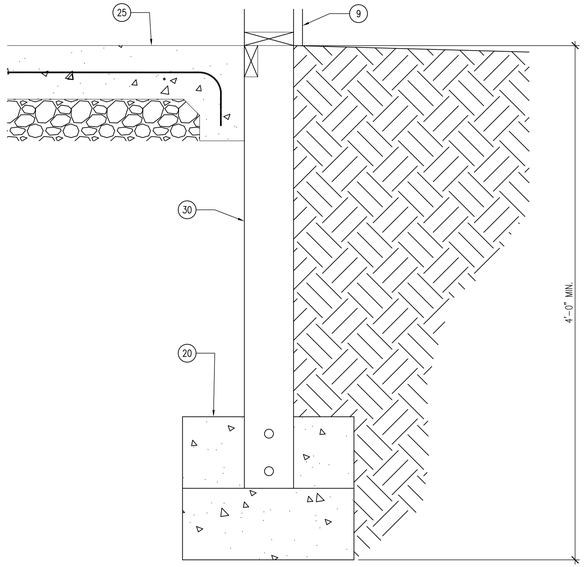

05 DETAIL – POST-FRAME FOUNDATION
SCALE: 1 1/2" = 1'-0"

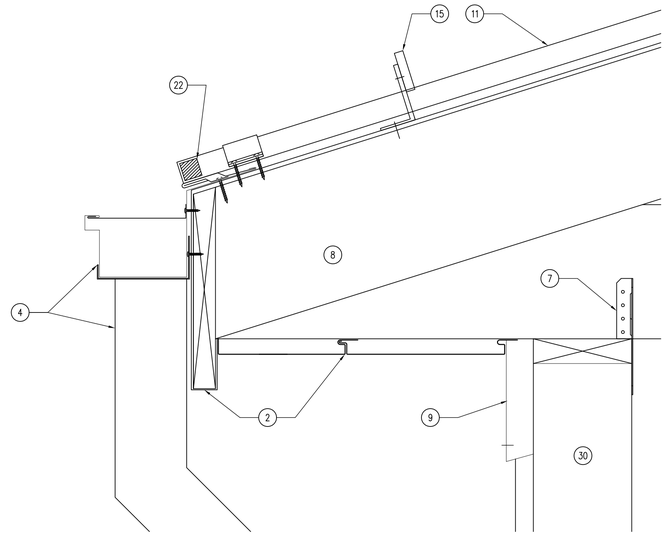

04 DETAIL – ROOF EAVE
SCALE: 3" = 1'-0"

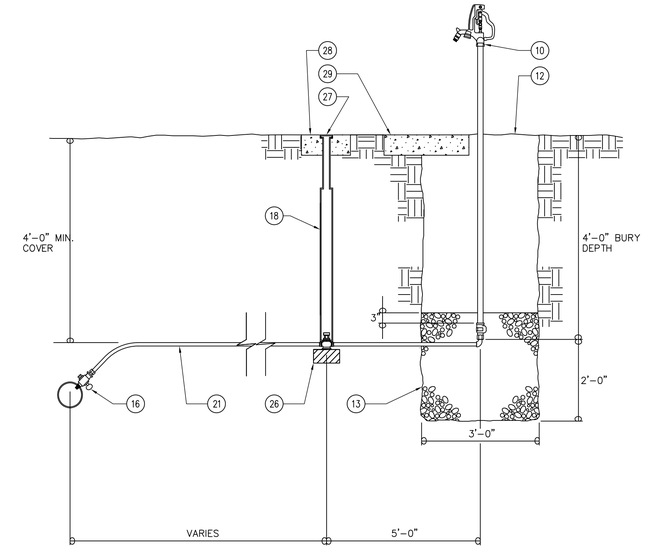

03 DETAIL – HYDRANT
SCALE: NTS = 1'-0"

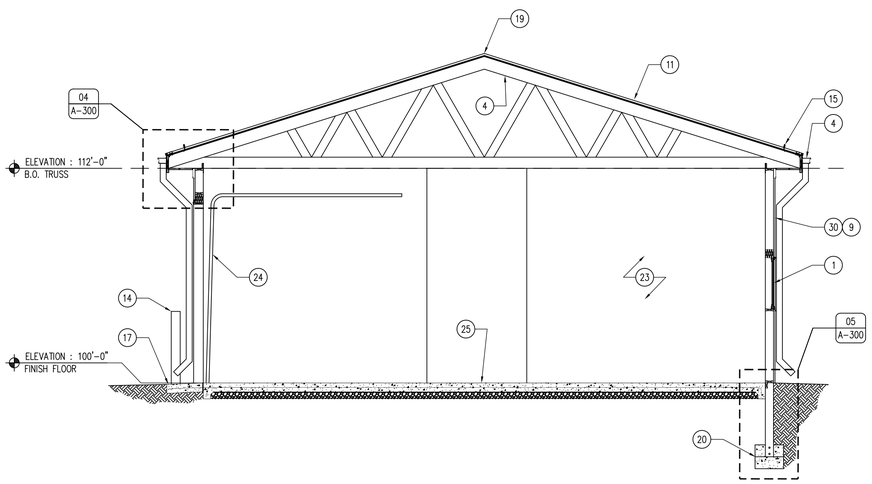

02 BUILDING SECTION
SCALE: 1/4" = 1'-0"

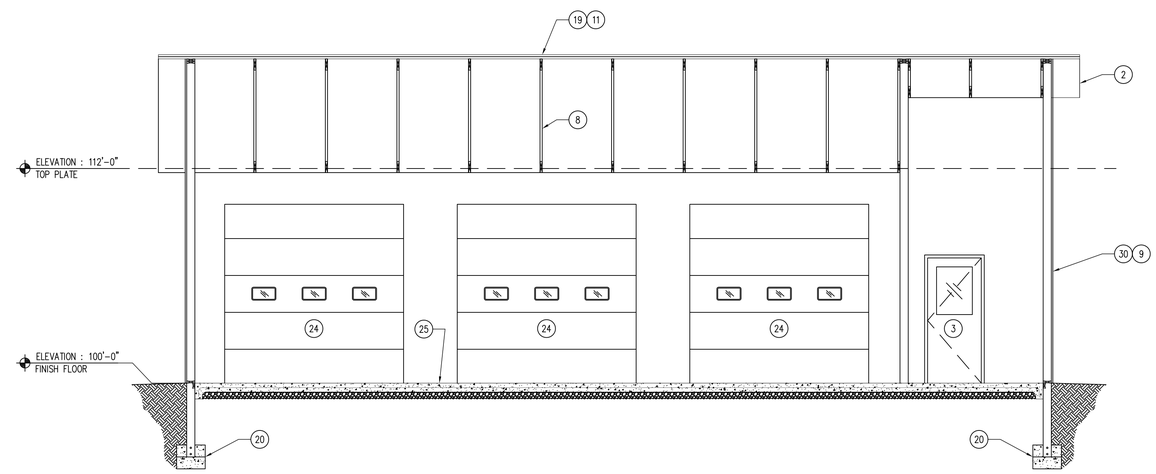

01 BUILDING SECTION
SCALE: 1/4" = 1'-0"

KEYNOTES

1. ANDERSEN 100 SERIES WINDOW AS SCHEDULED, DARK BRONZE. REFER TO SHEET A-600.
2. METAL VENTED FLUSH-SOFFIT AND FASCIA PANEL. COLOR TO MATCH ROOF.
3. DOOR AS SCHEDULED. REFER TO SHEET A-600.
4. 6" STANDARD METAL GUTTER AND DOWNSPOUT SYSTEM TO MATCH ROOF, FASCIA AND SOFFIT.
5. SNOW AND ICE GUARD BAR. PLACE OVER ENTIRE PERIMETER OF ROOF TO PROTECT GUTTERS.
6. 2X BLOCKING AS REQUIRED.
7. TRUSS HANGER CLIP (SPECIFIED BY PRE-ENGINEERED BUILDING SUPPLIER).
8. TRUSS (SPECIFIED BY PRE-ENGINEERED BUILDING SUPPLIER).
9. MCELROY MAX-RIB ULTRA WITH KYNAR 500 COATING, SURREY BEIGE.
10. BACKFLOW PROTECTED, AUTOMATIC DRAINING, FREEZELESS YARD HYDRANT, WOODFORD MODEL Y2 OR APPROVED EQUAL.
11. MCELROY MEDALLION-LOK 24 GA. STANDING SEAM METAL ROOF. COLOR TO BE DARK BRONZE.
12. EARTH BACKFILL
13. 3'-0" DIAMETER X 2'-6" DEEP DRAIN PIT. FILL WITH 1/2" GRAVEL AS DIRECTED BY THE ENGINEER, WRAP WITH ENGINEERING FABRIC.
14. TRAFFIC BOLLARD WITH PLASTIC COVER SLEEVE, SEE DETAIL 02/A-200.
15. METAL SNOW GUARD BAR OVER ENTIRE PERIMETER OF ROOF, MATCH COLOR OF ROOF.
16. CORPORATION STOP WITH SERVICE SADDLE OR TEE.
17. 6" CONCRETE APRON WITH 4" SUB-BASE AND #4 REBAR 24" O.C. BOTH DIRECTIONS.
18. CURB STOP.
19. RIDGE VENT AND CAP, PER MANUFACTURER'S RECOMMENDATIONS. MATCH COLOR AND FINISH OF ROOF.
20. POST-FRAME FOUNDATION BY BUILDING MANUFACTURER, REVIEW DETAIL 05/A-300.
21. 1" COPPER WATER SERVICE PIPING.
22. NEOPRENE STEEL SIDING GASKET, PER MANUFACTURER.
23. PARTITION WALL AS SCHEDULED. SEE SHEET A-100 & A-002.
24. OVERHEAD GARAGE DOOR. REFER TO FINISH SCHEDULE.
25. 6" CONCRETE SLAB OVER 6" OF ENGINEERED SUBBASE, CONTINUOUS #4 REBAR 24" O.C. BOTH DIRECTIONS, SMOOTH FINISH.
26. CURB BOX.
27. STEEL WATER CAP, WORD "WATER" ON COVER.
28. 1'-3" SQUARE X 6" THICK CONCRETE SLAB.
29. CONCRETE SPLASH PAD 2'-0" X 3'-0" X 6" THICK.
30. POST-FRAME BUILDING, BY MANUFACTURER.

GENERAL NOTES

A. REFER TO FINISH & DOOR SCHEDULE, SHEET A-600.
B. ALL ELECTRICAL SHALL BE NEC 2010 AND NFPA 70 COMPLIANT AND UP TO ALL CODES AND ORDINANCES REQUIRED BY LAW. ALL OUTLETS TO BE MOUNTED AT 42" ABOVE FINISHED FLOOR.
C. REFER TO REFLECTED CEILING PLAN FOR CEILING HEIGHTS, SHEET A-110.
D. REFER TO INDEX SHEET FOR WALL TYPES, SHEET A-002.
E. FIELD VERIFY ALL DIMENSIONS PRIOR TO CONSTRUCTION A-101.
F. FIELD VERIFY EQUIPMENT LOCATIONS FIR ELECTRICAL OUTLET LOCATIONS. REFER TO ELECTRICAL PLANS.
G. REFER TO FINISH SCHEDULE SHEET FOR COLOR AND MATERIAL SECTIONS, SHEER A-600.
H. CONTRACTOR TO HAVE THIS BUILDING, PRIOR TO CONSTRUCTION PRE-ENGINEERED BY BUILDING SUPPLIER.

CONSULTANT:

IOWA DEPARTMENT OF NATURAL RESOURCES
ENGINEERING SERVICES - WALLACE BUILING
502 E. 9TH ST., DES MOINES, IA 50319-0034
P: 515.281.5918
F: 515.281.8685

BUILDING SECTIONS AND ROOF DETAILS

STORAGE BUILDING REPLACEMENT FOR:
WALNUT WOODS SP

POLK COUNTY, IOWA

WALNUT WOODS SP

NO.	BY / DATE	REVISION

DRAWN BY:
PROJECT NUMBER: 15-05-77-04
CHK'D BY:
DATE: 10.01.2014
SHEET No: A-300

DOOR TYPES

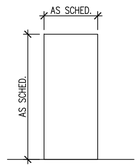

D-1
STEELCRAFT "L18"
HONEYCOMB
ENTRY DOOR

FRAME TYPES

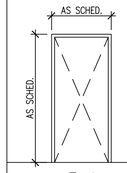

F-1
HOLLOW METAL

WINDOW TYPES

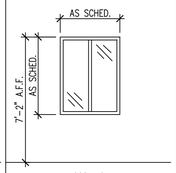

W-1
FIBERGLASS
GLIDER WINDOW
ANDERSON 100

FINISH SCHEDULE

ROOM #	ROOM NAME	FLOORING	BASE	NORTH WALL FINISH	EAST WALL FINISH	SOUTH WALL FINISH	WEST WALL FINISH	CEILING	NOTES
100	STORAGE	CONC-1	–	–	–	–	–	OPEN	
101	CAN ROOM	CONC-1	–	PNT-1	PNT-1	PNT-1	PNT-1	OPEN	–

12 NOT USED
SCALE: 1 1/2" = 1'-0"

11 NOT USED
SCALE: 1 1/2" = 1'-0"

10 NOT USED
SCALE: 1 1/2" = 1'-0"

HARDWARE TYPES

HARDWARE SET NO. 1 – DOORS: 100A, 101

3 EA.	HINGES	FBB179 4 1/2 X 4 1/2
1 EA.	STORE LOCKSET	ND53PD (ATHENS)
3 EA.	PERIMETER SEALS	BLACK GASKET
1 EA.	THRESHOLD SEAL	BLACK BROOM TYPE
1 EA.	CLOSER	LCN 1000 SERIES CLOSER

FINISH DESCRIPTION

FINISH MARK	MATERIAL	MANUFACTURER INFO: COMPANY NAME	MANUFACTURER INFO: PRODUCT NUMBER	DIMENSION	COLOR	FINISH	COMMENTS
FLOOR FINISH							
CONC-1	SEALED CONCRETE	–	–	–	–	–	–
INTERIOR FINISH							
PNT-1	INTERIOR PAINT	SHERWIN WILLIAMS	–	–	TBD	PEARL	1/2" PLYWOOD WALLS TO 8'-0" AFF
EXTERIOR FINISH							
SS-1	STEEL SIDING	MCELROY	MAX-RIB ULTRA	29GA	SURREY BEIGE	KYNAR 500	WINDOW & DOOR TRIM DARK BRONZE
RF-1	STEEL ROOFING	MCELROY	MEDALLION-LOK	24GA	DARK BRONZE	KYNAR 500	FACSIA, GUTTERS, TRIM TO MATCH

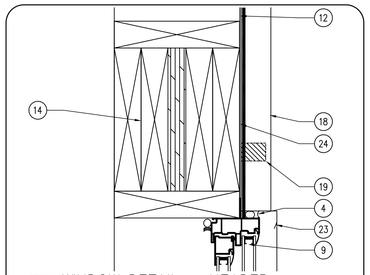

09 WINDOW DETAIL – HEADER
SCALE: 3" = 1'-0"

08 NOT USED
SCALE: 3" = 1'-0"

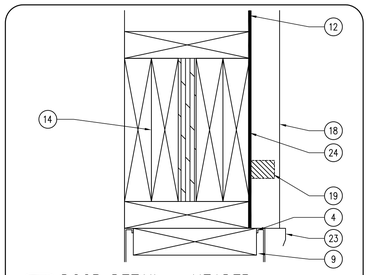

07 DOOR DETAIL – HEADER
SCALE: 3" = 1'-0"

KEYNOTES

1. 1/2" CDX PLYWOOD.
2. NOT USED.
3. DOOR AS SCHEDULED.
4. CONTINOUS SEALANT AND BACKER ROD
5. MTL. BOX STUD HEADER
6. ADA COMPLIANT, THRESHOLD.
7. WOOD BLOCKING AS REQUIRED.
8. NOT USED.
9. DOOR FRAME AS SCHEDULED.
10. NOT USED.
11. NOT USED.
12. POST-FRAME STRUCTURE AS SCHEDULED.
13. TREATED 2X, PER MANUF. RECOMMENDATION.
14. HEADER, PER MANUF. RECOMMENDATION.
15. NOT USED.
16. WINDOW AS SCHEDULED.
17. NOT USED.
18. STEEL SIDING, AS SCHEDULED.
19. NEOPRENE GASKET, BY MANUFACTURER.
20. BRUSH TYPE GASKET FOR EXTERIOR DOORS.
21. CONCRETE SLAB, REFER TO FINISH SCHEDULE.
22. NOT USED.
23. METAL FLASHING W/ SEALANT, AS REQUIRED.
24. NOT USED.
25. WATER RESISTANT PLYWOOD SHEATHING.

GENERAL NOTES

A. WOOD DOORS TO BE CUSTOM GRADE "A" BIRCH WOOD VENEER SOLID CORE. FINISH TO BE APPROVED BY ARCHITECT.
B. ALL HARDWARE MODEL NUMBERS BASED ON SCHLAGE "ND-SERIES" LOCKSETS AND "IVES" HARDWARE.
C. HARDWARE FINISH TO BE : "POLISHED CHROME (625)", UNLESS NOTED OTHERWSE.
D. WINDOW BASIS OF DESIGN, ANDERSON 100 – VINYL. REFER TO MANUFACTURER'S INSTRUCTIONS.
E. CHECK ALL QUANTITIES, DIMENSIONS AND FINISHES BEFORE ORDERING.

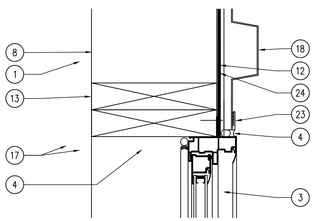

06 WINDOW DETAIL – JAMB
SCALE: 3" = 1'-0"

05 NOT USED
SCALE: 3" = 1'-0"

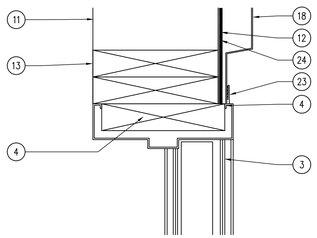

04 DOOR DETAIL – JAMB
SCALE: 3" = 1'-0"

DOOR SCHEDULE

DOOR NUMBER	DOOR: DIMENSION WIDTH	DOOR: DIMENSION HEIGHT	DOOR: DIMENSION THICK.	DOOR: TYPE	DOOR: GLASS	DOOR: FINISH	FRAME: DETAILS HEAD	FRAME: DETAILS JAMB	FRAME: DETAILS THRESHOLD	FRAME: TYPE	FRAME: FINISH	FIRE RATING LABEL	HARDWARE SET #	HARDWARE KEYSIDE ROOM NUMBER	COMMENTS
100A	3'-0"	7'-0"	1 3/4"	D-1	MANUF.	MANUF.	07/A-600	04/A-600	01/A-600	F-1	MANUF.		1	EXT.	STEELCRAFT L18 FLUSH
100B	10'-0"	10'-0"	–	–	MANUF.	MANUF.	–	–	–	–	–		–	–	R-6 GARAGE DOORS
100C	10'-0"	10'-0"	–	–	MANUF.	MANUF.	–	–	–	–	–		–	–	R-6 GARAGE DOORS
100D	10'-0"	10'-0"	–	–	MANUF.	MANUF.	–	–	–	–	–		–	–	R-6 GARAGE DOORS
101	3'-0"	7'-0"	1 3/4"	D-1	MANUF.	MANUF.	07/A-600	04/A-600	01/A-600	F-1	MANUF.		1	EXT.	STEELCRAFT L18 FLUSH

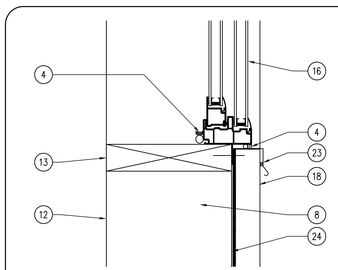

03 WINDOW DETAIL – SILL
SCALE: 3" = 1'-0"

02 NOT USED
SCALE: 3" = 1'-0"

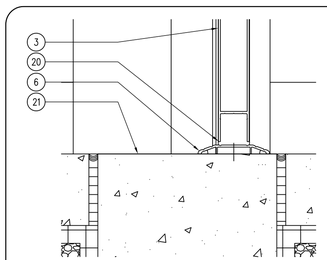

01 DOOR DETAIL – THRESHOLD
SCALE: 3" = 1'-0"

WINDOW SCHEDULE

WINDOW TYPE	WINDOW: DIMENSION WIDTH	WINDOW: DIMENSION HEIGHT	WINDOW: TYPE	WINDOW: GLASS	WINDOW: FINISH	FRAME: DETAILS HEAD	FRAME: DETAILS JAMB	FRAME: DETAILS SILL	FRAME: TYPE	FRAME: FINISH	QUANTITY	COMMENTS
W-1	36"	48"	1	MANUF.	TBD	09/A-600	06/A-600	03/A-600	–	MANUF	3	ANDERSON 100 – SLIDER WINDOWS

CONSULTANT:

IOWA DEPARTMENT OF NATURAL RESOURCES
ENGINEERING SERVICES - WALLACE BUILING
502 E. 9TH ST., DES MOINES, IA 50319-0034
P: 515.281.5918
F: 515.281.8685

FINISH, DOOR & WINDOW SCHEDULES

STORAGE BUILDING FOR:
BOONE FISHERIES AREA

BOONE COUNTY, IOWA

BOONE RESEARCH STATION

NO.	BY / DATE	REVISION

DRAWN BY:
PROJECT NUMBER: 13-02-08-04
CHK'D BY:
DATE: 03.28.2012
SHEET No: A-600