IOWA DEPARTMENT OF NATURAL RESOURCES

CONSTRUCTION DOCUMENTS FOR HONEY CREEK RESORT STATE PARK ACTIVITY BUILDING MECHANICAL APPANOOSE COUNTY, IOWA

PROJECT # 13-05-04-02

IOWA ONE CALL
800/292-8989
TOLL FREE
CALL - BEFORE - YOU DIG

PLANS PREPARED BY
ENGINEERING BUREAU
CONSERVATION AND RECREATION DIVISION

REGISTERED PROFESSIONAL ARCHITECT
RYAN E. RICHEY
06461
IOWA

I hereby certify that this architectural document was prepared by me or under my direct personal supervision and that I am a duly Registered Professional Architect under the laws of the State of Iowa.

RYAN E. RICHEY DATE

My license renewal date is June 30, 2015.

Pages or sheets covered by this seal:

A-001 - A-002

LICENSED PROFESSIONAL ENGINEER
CHAD D. BASS
21397
IOWA

I hereby certify that this engineering document was prepared by me or under my direct personal supervision and that I am a duly LICENSED Professional ENGINEER under the laws of the State of Iowa.

CHAD D. BASS DATE

My license renewal date is DECEMBER 31, 2013.

Pages or sheets covered by this seal:

M0.0 - M2.0

LICENSED PROFESSIONAL ENGINEER
JAMES R. DEEDS IV
17588
IOWA

I hereby certify that this engineering document was prepared by me or under my direct personal supervision and that I am a duly LICENSED Professional ENGINEER under the laws of the State of Iowa.

JAMES R. DEEDS IV DATE

My license renewal date is DECEMBER 31, 2014.

Pages or sheets covered by this seal:

E1.0

SHEET INDEX

SHEET. NO.	SHEET TITLE
	ARCHITECTURAL
A-001	COVER SHEET
A-002	NOTES, SYMBOLS & DOOR SCHEDULE
	ELECTRICAL
E1.0	ELECTRICAL FLOOR PLANS
	MECHANICAL
M0.0	MECHANICAL SYMBOLS AND NOTES
MD1.0	MECHANICAL DEMOLITION PLAN
M1.0	MECHANICAL FLOOR PLAN
M2.0	MECHANICAL SCHEDULES

DIRECTORY

OWNER		ELECTRICAL ENGINEER	
COMPANY	IOWA DEPARTMENT OF NATURAL RESOURCES	COMPANY	KCL ENGINEERING
ADDRESS	502 E. 9TH. ST.	ADDRESS	2829 WESTOWN PARKWAY
CITY,STATE,ZIP	DES MOINES, IA 50319	CITY,STATE,ZIP	WEST DES MOINES, IA 50226
CONTACT	N/A	CONTACT	JAMES DEEDS
TELEPHONE	515.281.5918	TELEPHONE	515.371.9970
FAX	–	FAX	–
EMAIL	N/A	EMAIL	JDEEDS@KCLENGINEERING.COM
DNR INSPECTOR		**MECHANICAL ENGINEER**	
COMPANY	IOWA DEPARTMENT OF NATURAL RESOURCES	COMPANY	KCL ENGINEERING
ADDRESS	–	ADDRESS	2829 WESTOWN PARKWAY
CITY,STATE,ZIP	INDIANOLA, IA	CITY,STATE,ZIP	WEST DES MOINES, IA 50226
CONTACT	JASON KRUSE	CONTACT	CHAD BASS
TELEPHONE	515.250.3707	TELEPHONE	515.205.1397
FAX	–	FAX	–
EMAIL	JASON.KRUSE@DNR.IOWA.GOV	EMAIL	CBASS@KCLENGINEERING.COM
ARCHITECT			
COMPANY	IOWA DEPARTMENT OF NATURAL RESOURCES	COMPANY	–
ADDRESS	502 E. 9TH. ST.	ADDRESS	–
CITY,STATE,ZIP	DES MOINES, IA 50319	CITY,STATE,ZIP	–
CONTACT	RYAN RICHEY	CONTACT	–
TELEPHONE	515.979.0107	TELEPHONE	–
FAX	–	FAX	–
EMAIL	RYAN.RICHEY@DNR.IOWA.GOV	EMAIL	–
COMPANY	–	COMPANY	–
ADDRESS	–	ADDRESS	–
CITY,STATE,ZIP	–	CITY,STATE,ZIP	–
CONTACT	–	CONTACT	–
TELEPHONE	–	TELEPHONE	–
FAX	–	FAX	–
EMAIL	–	EMAIL	–

PROJECT DATA

BUILDING DATA

BUILDING CODES

PROJECT DESCRIPTION

THE ACTIVITY CENTER'S MECHANICAL ROOM IS IN DISARRAY AND NEEDS TO BE CLEANED UP AND REWORKED TO CREATE A MORE EDUCATIONAL LOOK AND FEEL. THE MECHANICAL SYSTEMS ARE NOT WORKING AS ORIGINALLY DESIGNED WHICH WILL BE REPAIRED AND BROUGHT UP TO PROPER WORKING CONDITION WITH THIS RENOVATION.

AUTHORIZATION TO BID

AUTHORIZATION - PARKS | WILDLIFE | FISHERIES | LAW ENFORCEMENT | FORESTRY DATE

ENGINEERING BUREAU CHIEF DATE

BID ITEMS

ITEM NUMBER	DESCRIPTION	ESTIMATED QUANTITY
1	DEMOLITION	1 LUMP SUM
2	MEGA-THERM DOORS AND INSTALL	1 LUMP SUM
3	MECHANICAL DEMO & UPGRADES	1 LUMP SUM
4	ELECTRICAL DEMO AND UPGRADES	1 LUMP SUM

CONSULTANT:

IOWA DEPARTMENT OF NATURAL RESOURCES
ENGINEERING SERVICES - WALLACE BUILING
502 E. 9TH ST., DES MOINES, IA 50319-0034
P: 515.281.5918
F: 515.281.8685

COVER SHEET

MECHANICAL RENOVATION FOR:
HONEY CREEK RESORT SP

APPANOOSE COUNTY, IOWA

MORAVIA

NO.	BY	DATE	REVISION

DRAWN BY:
PROJECT NUMBER: 13-05-04-02
CHK'D BY:
DATE: 12.24.2013
SHEET No:

A-001

DIMENSION NOTES

1. IN INTERIOR SPACES THE ACTUAL DIMENSIONS MAY BE LESS IMPORTANT THAN IF AT TWO ELEMENTS IN THE BUILDING WERE TO BE EQUAL. IN THESE CASES, THE WORD "EQUAL OR EQ" IS USED IN LIEU OF THE ACTUAL DIMENSIONS.
2. WHEN A ROOM CENTERLINE IS INDICATED ONLY ONE SIDE OF THE ROOMS ELEMENTS MAY BE DIMENSIONED.
3. COLUMN IDENTIFICATION: DETAILS WILL GOVERN ALL DIMENSIONS AND NO DIMENSIONS WILL BE SHOWN ON SMALL SCALE PLANS.
4. PARTITION CENTERED ON COLUMN OR GRID LINES WILL NOT BE DIMENSIONED ON SMALL SCALE PLANS.
5. PARTITION WITH A FINISHED FACE FLUSH WITH FINISH FACE OF COLUMN WILL NOT be DIMENSIONED ON SMALL SCALE PLANS.
6. PARTITION FINISH FACE ON COLUMN OR GRID LINE WILL NOT BE DIMENSIONED ON SMALL SCALE PLANS .
7. WHEN ONE JAMB OCCURS AT A COLUMN OR GRID LINE NO DIMENSIONS WILL BE SHOWN ON THE SMALL SCALE PLANS. THE OPENING WIDTH WILL BE GOVERNED BY CRITERIA OR SCHEDULES.
8. WHEN NEITHER JAMB OCCURS AT A COLUMN OR GRID LINE ONE JAMB WILL BE DIMENSIONED.
9. DOOR LOCATIONS ARE TO BE LOCATED BY ONE OF FOLLOWING:
   a. ONE JAMB FACE LOCATED BY A PARTITION AT RIGHT ANGLE. 4"TYPICAL UNLESS INDICATED ON PLAN.
   b. OR AS DIMENSIONED ON PLAN.
10. PARTITIONS ARE DIMENSIONED TO FACE OF CMU OR FACE OF STUD UNLESS OTHERWISE NOTED.
11. DIMENSIONS ARE INDICATED IN THE DOCUMENTS. THE DRAWINGS SHALL NOT BE SCALED FOR DIMENSIONS.

MATERIAL LEGEND

EARTH
COMPACTED EARTH
GRASS
GRAVEL
clay
fence
turf block
pavers
CONCRETE MASONRY UNIT
metal stud
PARTICLE BOARD
PLYWOOD
BATT INSULATION
ACOUSTICAL CEILING TILE
plastic
carpet
GYPSUM / STUCCO
grout
sand
foam INSULATION
RIGID INSULATION
ALUMINUM
STEEL
FINISHED WOOD
brick
CONCRETE
ASPHALT
cast stone
stone
glass
WOOD BLOCKING
CONTINUOUS WOOd

SYMBOL LEGEND

NORTH AAROW

00 TITLE SCALE: 0 = 0'-0" — DRAWING / DETAIL IDENTIFICATION

00 A-000 — SECTION REFERENCE

00 A-000 — DETAIL REFERENCE

00 A-000 — EXTERIOR ELEVATION

00/A-100 — INTERIOR ELEVATION

ELEVATION : 0'-0" DESCRIPTION1 — ELEVATION TARGET

1 A — COLUMN GRID

00 A-000 — MATCH LINES

ROOM 000 — ROOM/SPACE IDENTIFICATION

100 — DOOR TAG

00 — WINDOW TAG

00 — WALL TYPE REFERENCE

KEYNOTE NUMBER -NEW C.S.I. DIVISION/KEY

00 — KEYNOTE - DEMOLITION

00 — KEYNOTE - NEW/RENOVATION

00 — KEYNOTE - FINISH/ACCESSORY

PL — PROPERTY LINE REFERENCE

CL — CENTER LINE REFERENCE

0" — LEVEL CHANGE REFERENCE

DETAIL CUT LINE

1 — REVISION NUMBER AND CLOUD

GENERAL NOTES

THE FOLLOWING GENERAL NOTES SHALL PERTAIN TO THE ENTIRE SET OF CONTRACT DOCUMENTS

1. A GENERAL CONTRACTOR SHALL NOTE THAT THE ARCHITECTURAL DRAWINGS ARE ESTABLISHING A MINIMUM MATERIAL OR CONSTRUCTION METHOD STANDARD. THE GENERAL CONTRACTOR SHALL PROVIDE A BID PRICE BASED ON THE SPECIFIC MATERIALS NOTED.
2. DO NOT SCALE DRAWINGS. IF DIMENSIONS ARE IN QUESTION, THE CONTRACTOR SHALL BE RESPONSIBLE FOR OBTAINING CLARIFICATION FROM THE ARCHITECT BEFORE CONTINUING WITH CONSTRUCTION.
3. GENERAL CONTRACTOR AND SUBCONTRACTORS SHALL PERFORM THEIR WORK IN ACCORDANCE WITH ALL APPLICABLE CODES GOVERNING EACH TRADE.
4. THE CONTRACTOR SHALL MAINTAIN A CLEAN AND ORGANIZED JOB SITE, ACCEPTABLE TO THE OWNER.
5. THE CONTRACTOR SHALL COORDINATE THE SEQUENCE OF WORK WITH THE OWNER REPRESENTATIVE..
6. THERE SHALL BE NO DEVIATION BY THE GENERAL CONTRACTOR FROM THE CONSTRUCTION DOCUMENTS UNLESS APPROVED IN WRITING BY THE ARCHITECT.
7. EACH CONTRACTOR SHALL VERIFY EXISTING CONDITIONS IN THE FIELD PRIOR TO THE INITIATION OF WORK AND SHALL NOTIFY THE ARCHITECT OF ANY DISCREPANCIES OR CONDITIONS INTERFERING WITH THE ABILITY OF THE CONTRACTOR TO COMPLETE WORK AS OUTLINED ON THE CONSTRUCTION DRAWINGS.
8. ALL CONTRACTORS ARE REQUIRED TO COORDINATE THEIR WORK WITH OTHER TRADES. LACK OF THIS COORDINATION RESULTING IN ADDED COST TO THE CONTRACT WILL BE BORNE BY THE CONTRACTOR.
9. GENERAL CONTRACTOR SHALL BE RESPONSIBLE FOR KEEPING THE EXISTING BUILDING WATER TIGHT DURING CONSTRUCTION.
10. THE CONTRACTOR WILL VERIFY THAT EXIT EGRESS IS MAINTAINED FOR ALL OCCUPIED AREAS OF THE BUILDING THROUGHOUT ALL PHASES OF CONSTRUCTION.
11. PLAN DIMENSIONS ARE GIVEN TO FACE OF STUD OR BLOCK WALL. "CLEAR" DIMENSIONS ARE GIVEN TO THE FACE
12. THE OWNER WILL ASSUME ALL LIABILITY AND SHALL TAKE PERSONAL RESPONSIBILITY FOR ANY DECISIONS THAT THEY MAKE TO CHANGE OR ALTER THE CONSTRUCTION DOCUMENTS WITHOUT THE ARCHITECT'S WRITTEN APPROVAL.
13. PROTECT ALL EXISTING FINISHES AND MATERIALS TO REMAIN, IN ACCORDANCE WITH ACCEPTABLE TRADE PRACTICES, MANUFACTURER, RECOMMENDATIONS, OR AS DIRECTED BY THE ARCHITECT.
14. CUTTING OF EXISTING CONSTRUCTION FOR THE INSTALLATION OF ALL NEW WORK BY ALL TRADES, AND THE SUBSEQUENT PATCHING THEREOF, SHALL BE THE RESPONSIBILITY OF THE GENERAL CONTRACTOR, WHETHER THE WORK IS DONE BY HIS OWN FORCES OR NOT. GRINDING OF MATERIALS FOR REMOVAL SHALL NOT BE PERMITTED. CUTTING SHALL BE TO STRAIGHT LINE. UNWORKMAN-LIKE CUTTING, DAMAGE RESULTING THEREFROM AND UNACCEPTABLE PATCHING SHALL BE REPAIRED AND/OR REPLACED TO AN ACCEPTABLE CONDITION APPROVED BY THE ARCHITECT. A OWNER PROJECT REPRESENTATIVE SHALL BE NOTIFIED PRIOR TO CUTTING OF ANY STRUCTURAL ITEM (I.E. CONCRETE FLOOR, MASONRY, WALL, ETC.) WITHIN THE EXISTING BUILDING. METHOD OF CUTTING SHALL BE APPROVED BY THE OWNER PROJECT REPRESENTATIVE.
15. PATCHING MATERIAL SHALL MATCH EXISTING ADJACENT MATERIALS AS CLOSELY AS POSSIBLE IN COLOR, PATTERNS, AND/OR TEXTURES.
16. ALL SALVAGE MATERIALS REMOVED SHALL REMAIN THE PROPERTY OF THE OWNER. ALL NON-SALVAGE CONSTRUCTION MATERIALS AND DEBRIS FROM DEMOLITION WORK SHALL BE REMOVED FROM THE SITE AS WORK PROGRESSES, UNLESS OTHERWISE NOTED.
17. ISOLATE ALL DISSIMILAR METALS. G SHALL REQUEST APPROVAL BY THE ARCHITECT FOR MATERIALS USED FOR THIS PURPOSE, PRIOR TO INSTALLATION.
18. SEALANTS SHALL BE COMPATIBLE WITH ADJACENT SURFACE(S) THAT ARE IN CONTACT. REFER TO SPECIFICATIONS FOR APPROVED MANUFACTURERS AND PROCEDURES.
19. CAULK JOINTS OF DISSIMILAR EXPOSED TO VIEW MATERIALS AS REQUIRED BY THE ARCHITECT.
20. ALL DOOR HARDWARE TO BE FL. ADA COMPLIANT.
21. ALL EXTERIOR WALLS, DOORS AND WINDOWS ARE EXISTING U.N.O.
22. ALL FINISHES TO BE PER CLASS INDICATED ON A-004
23. NO CONSTRUCTION SHALL OCCUR WITHOUT SHOP DRAWING APPROVAL. SHOP DRAWINGS TO BE PROVIDED TO ARCHITECT FOR REVIEW UPON BEING REVIEWED AND SIGNED/DATED BY THE GENERAL CONTRACTOR AND SHALL INCLUDE BUT NOT BE LIMITED TO THE FOLLOWING ITEMS:
    - CABINETRY MILLWORK
    - RUNNING TRIM AND CASING PROFILES
    - PAINT/LAMINATE COLOR SAMPLES
    - ACOUSTICAL CEILING AND GRID
    - TOILET ACCESSORIES
    - KITCHEN EQUIPMENT
    - ROOF PENETRATIONS
    - HVAC EQUIPMENT
    - PLUMBING EQUIPMENT AND FIXTURES
    - ELECTRICAL EQUIPMENT AND FIXTURES
24. PRIOR TO COMMENCING WORK, THE CONTRACTOR SHALL SUBMIT (2) COPIES OF MATERIAL SAFETY DATA SHEETS (MSDS) FOR ALL PRODUCTS USED TO PERFORM THE WORK.

ABBREVIATIONS

ABV	ABOVE
AFF	ABOVE FINISH FLOOR
ACT	ACOUSTICAL CEILING TILE
AHU	AIR HANDLER UNIT
AL	ALUMINUM
AB	ANCHOR BOLT
@	AT
BM	BEAM
BRG	BEARING
BLK	BLOCK
BD	BOARD
BTM	BOTTOM
BLDG	BUILDING
BUR	BUILT-UP ROOF
CAB	CABINET
CPT	CARPET
CF	CEILING FINISH
CIP	CAST IN PLACE
CLG	CEILING
CL	CENTER LINE
CT	CERAMIC TILE
CLR	CLEAR
COL	COLUMN
CONC	CONCRETE
CMU	CONCRETE MASONRY UNIT
CONT	CONTINUOUS
CJ	CONTROL JOINT
DIA	DIAMETER
DEMO	DEMOLITION
DR	DOOR
DN	DOWN
DS	DOWNSPOUT
DWG	DRAWINGS
ELEC	ELECTRICAL
EWC	ELECTRIC WATER COOLER
ELEV	ELEVATION
EQ	EQUAL
EXIST	EXISTING
EJ	EXPANSION JOINT
EXT	EXTERIOR
FIN	FINISH
FV	FIELD VERIFY
FE	FIRE EXTINGUISHER
FLR	FLOOR
FD	FLOOR DRAIN
FTG	FOOTING
FR	FIRE RETARDANT
GA	GAUGE
GC	GENERAL CONTRACTOR
GALV	GALVANIZED
GFI	GROUND FAULT INTERRUPT
GYP	GYPSUM
HC	HANDICAPPED
HDW	HARDWARE
HT	HEIGHT
HDR	HEADER
HM	HOLLOW METAL
IC	INSTALLED BY CONTRACTOR
IO	INSTALLED BY OWNER
INSUL	INSULATION
INT	INTERIOR
JAN	JANITOR
JT	JOINT
LAM	LAMINATED
LF	LINEAR FEET
MANUF	MANUFACTURER
MAX	MAXIMUM
MO	MASONRY OPENING
MECH	MECHANICAL
MEMB	MEMBRANE
MTL	METAL
MIN	MINIMUM
N/A	NOT APPLICABLE
NIC	NOT IN CONTRACT
NTS	NOT TO SCALE
#, NO	NUMBER
OA	OVERALL
OC	ON CENTER
OCC	OCCUPANCY
OPNG	OPENING
OPP	OPPOSITE
OH	OVERHANG
PAV	PAVERS
PNT	PAINTED
PR	PAIR
PBO	PURCHASED BY OWNER
PF	PRE-FINISHED/PRIMED
PL	PLATE
PLMB	PLUMBING
PLYWD	PLYWOOD
PT	PRESSURE TREATED
POR	POINT OF REFERENCE
QT	QUARRY TILE
R	RADIUS
RCP	REFLECTED CEILING PLAN
REINF	REINFORCED
RENO	RENOVATION
REQ'D	REQUIRED
RD	ROOF DRAIN
RM	ROOM
RO	ROUGH OPENING
S	STAIN
SECT	SECTION
SIM	SIMILAR
SC	SOLID CORE
ST	STUCCO
SPEC	SPECIFICATION
SF	SQUARE FOOT
SS	STAINLESS STEEL
STL	STEEL
STRUCT	STRUCTURAL
STD	STANDARD
TR	TRUSS
TG	TEMPERED GLASS
TEXT	TEXTURED
TYP	TYPICAL
T&G	TONGUE & GROOVE
T&B	TOP & BOTTOM
UL	UNDERWRITERS LAB
UNO	UNLESS NOTED OTHERWISE
VP	VAPOR BARRIER
VB	VINYL BASE
VCT	VINYL COMPOSITION-TILE
VWC	VINYL WALL COVERING
WC	WATER COOLER
WH	WATER HEATER
WWF	WELDED WIRE FABRIC
WD	WOOD
W/	WITH
W/O	WITHOUT

DOOR AND FRAME TYPES

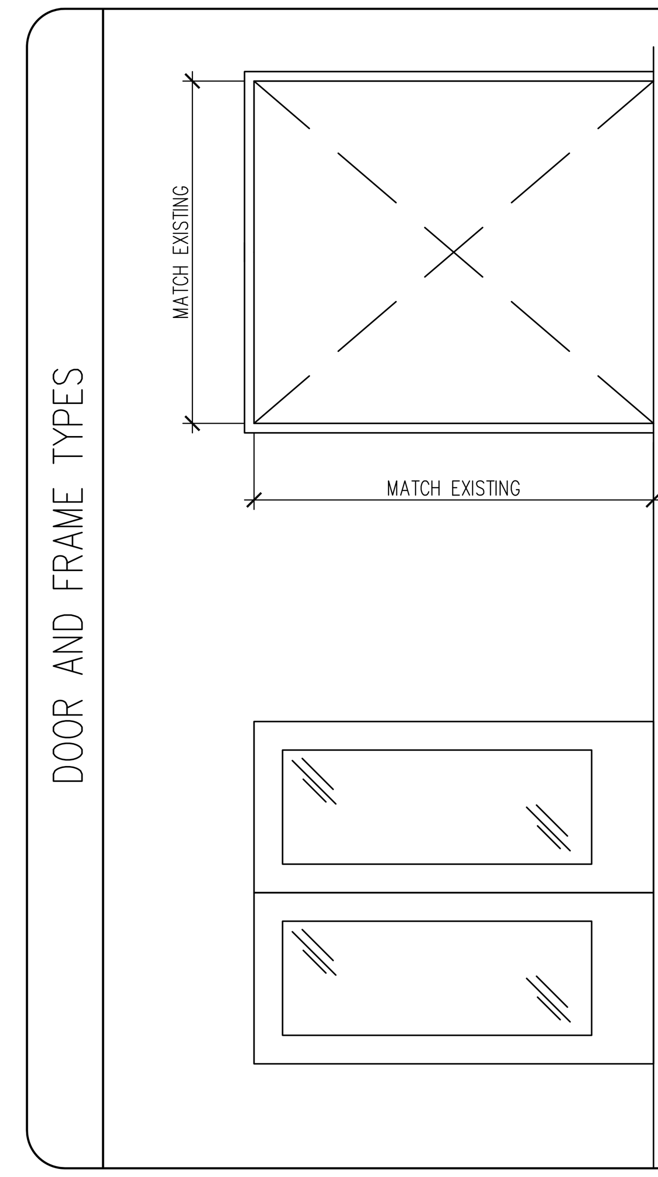

F-1
ALUMINUM
YKK MEGATHERM FRAME

D-1
FULL-LIGHT ALUMINUM
YKK MEGATHERM SERIES 35XT
STOREFRONT DOOR

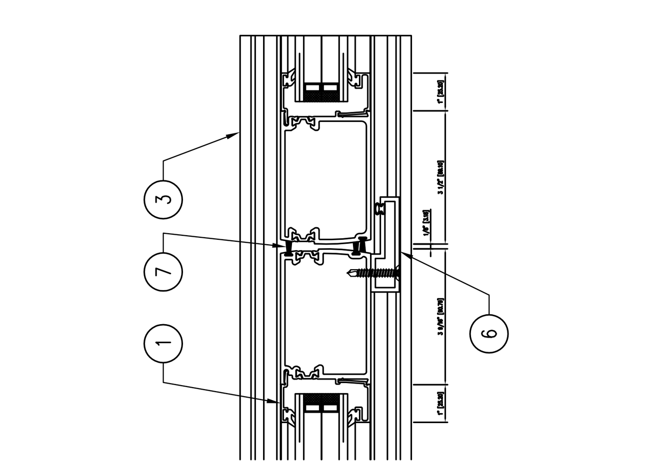

04 DETAIL - ASTRAGAL
SCALE: 3" = 1'-0"

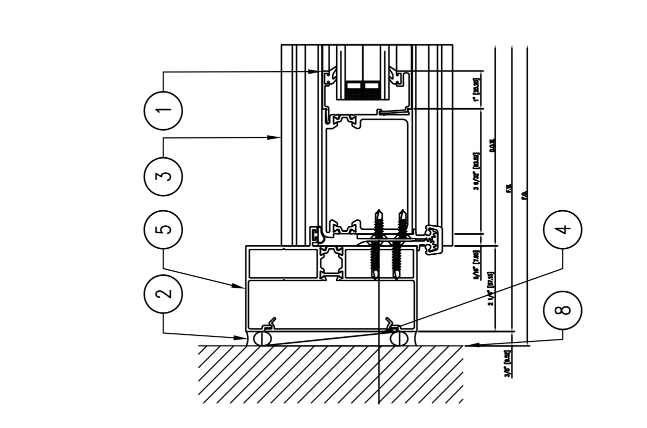

03 DETAIL - JAMB
SCALE: 3" = 1'-0"

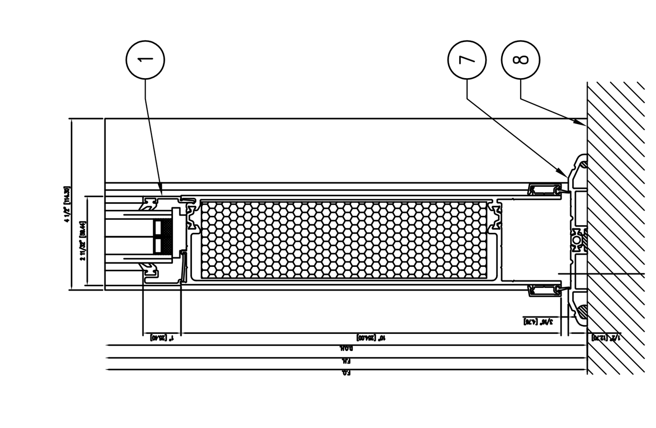

02 DETAIL - THRESHOLD
SCALE: 3" = 1'-0"

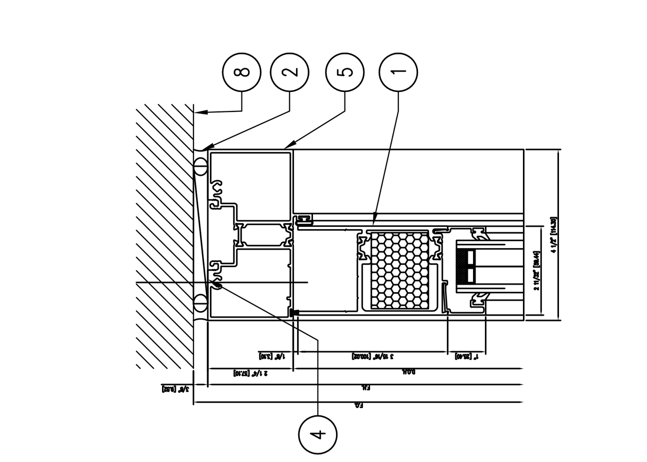

01 DETAIL - HEADER
SCALE: 3" = 1'-0"

DOOR NUMBER	DOOR DIMENSION WIDTH	DOOR DIMENSION HEIGHT	DOOR THICK.	DOOR TYPE	DOOR GLASS	DOOR FINISH	FRAME DETAILS HEAD	FRAME DETAILS JAMB	FRAME DETAILS THRESHOLD	FRAME TYPE	FRAME FINISH	FIRE RATING LABEL	HARDWARE SET #	HARDWARE KEYSIDE ROOM NUMBER	COMMENTS
100	FIELD VERIFY	FIELD VERIFY	MANUF.	D-1	1 3/8"	DARK BRONZE	01/A-002	03/A-002	02/A-002	F-1	DARK BRONZE		1	EXT.	YKK - MEGATHERM 35XT 1 3/8" FULL LIGHT

KEYNOTES

1. YKK MEGATHERM XT35 DOOR AS SCHEDULED.
2. CONTINOUS SEALANT AND BACKER ROD
3. ADA COMPLIANT THRESHOLD.
4. WOOD BLOCKING AS REQUIRED.
5. DOOR FRAME AS SCHEDULED.
6. NEOPRENE BULB GASKET WITH ASTRAGAL BY MANUFACTURER.
7. BRUSH TYPE GASKET.
8. EXISTING STRUCTURE.

HARDWARE NOTES

1. HARDWARE BY DOOR MANUFACTURER, CYLINDRICAL LOCK, DARK BRONZE TO MATCH DOOR.
2. DOOR WITH ASTRAGAL AND CONTINUOUS WEATHER SEALS.

GENERAL CONSTRUCTION NOTES

A. CONTRACTOR TO FIELD VERIFY ALL DIMENSIONS PRIOR TO CONSTUCTION.
B. CONTRACTOR SHALL, AFTER DEMOLITION OF EXISTING EQUIPMENT AND PRIOR TO INSTALLATION OF NEW EQUIPMENT IN BOTH THE MECHANICAL AND ELECTRICAL ROOMS, REPAIR WALLS AND REPAINT WITH TWO COATS OF SHERWIN WILLIAMS DURATION PAINT, COLOR TO BE DETERMINED. REPAIR OF WALLS SHALL CONSIST OF BUT IS NOT CONFINED TO THE FOLLOWING, REPAIRS OF DINGS, DENTS AND HOLES IN THE WALL, PATCHING OF EXISTING CHASE-WAYS AND DAMAGE TO THE FINISH OF THE WALLS. ALL REPAIRS SHALL HAVE ORIGINAL TEXTURING REAPPLIED PRIOR TO PAINTING.
C. CONTRACTOR SHALL, IF NECESSARY, MODIFY HEADER AND JAMBS FOR THE NEW THERMAL DOORS.
D. CONTRACTOR SHALL BE IN CONTACT WITH THE DESIGN TEAM AND SHALL SEND DAILY PROGRESS PHOTOS TO THE DESIGN TEAM AND ANY OTHER PHOTOS REQUESTED.

CONSULTANT:

IOWA DEPARTMENT OF NATURAL RESOURCES
ENGINEERING SERVICES - WALLACE BUILING
502 E. 9TH ST., DES MOINES, IA 50319-0034
P: 515.281.5918
F: 515.281.8685

WALL TYPES, NOTES & SYMBOLS

MECHANICAL RENOVATION FOR:
HONEY CREEK RESORT SP
MORAVIA
APPANOOSE COUNTY, IOWA

NO.	BY / DATE	REVISION

DRAWN BY: | PROJECT NUMBER: 13-05-04-02
CHK'D BY: | DATE: 12.24.2013
SHEET No: A-002

ELECTRICAL GENERAL NOTES

1. THE ENTIRE PROJECT SHALL COMPLY WITH THE CURRENT ISSUE OF THE NATIONAL ELECTRIC CODE (NEC), INCLUDING AMENDMENTS, AND WITH ALL STATE, LOCAL, AND OTHER CODES AS APPLICABLE. THE CURRENT ISSUE SHALL BE THE ISSUE THAT IS IN EFFECT WHEN THE CONSTRUCTION PERMITS ARE SECURED FOR THE WORK. THE INTERPRETATIONS AND DECISIONS OF THE AUTHORITY HAVING JURISDICTION OF APPLICABLE CODES SHALL GOVERN.
2. THIS CONTRACTOR SHALL BE RESPONSIBLE FOR OBTAINING ALL REQUIRED STATE AND LOCAL PERMITS AND ASSOCIATED FEES.
3. NOTE THAT THE ELECTRICAL DRAWINGS ARE ONLY A PORTION OF THE COMPLETE SET OF PLANS. THE COMPLETE SET OF PLANS SHALL BE USED TO DEFINE THE ELECTRICAL WORK. THIS SHALL INCLUDE, BUT NOT BE LIMITED TO, USING THE ARCHITECTURAL PLANS FOR DIMENSIONS AND DETAILS; EQUIPMENT PLANS FOR ROUGH–IN REQUIREMENTS, AND THE MECHANICAL PLANS FOR EQUIPMENT SIZES AND LOCATIONS. COORDINATE ALL WIRING DEVICE LOCATIONS AND ELEVATIONS INDICATED ON PLANS WITH THE OWNER, ARCHITECT AND FINAL FURNITURE/EQUIPMENT LAYOUTS.
4. COORDINATE LOCATION/INSTALLATION OF MECHANICAL AND ELECTRICAL WORK WITH ALL OTHER TRADES. NO ASPECT OF A SYSTEM INSTALLATION OR ITS ROUGH–IN SHALL COMMENCE UNTIL PROPER AND TIMELY COORDINATION WITH ALL TRADES ASSOCIATED WITH THE INSTALLATION HAS TRANSPIRED. ITEMS TO BE COORDINATED SHALL INCLUDE BUT NOT BE LIMITED TO: BUILDING STRUCTURE, SHEET METAL, ALL PIPING SYSTEMS, LIGHT FIXTURES, CONDUITS, CABLE TRAYS, ETC. REFER TO ALL GENERAL, MECHANICAL, AND ELECTRICAL DRAWINGS AND SPECIFICATIONS FOR THIS PROJECT.
5. RACEWAYS AND BOXES ARE SHOWN DIAGRAMMATICALLY ONLY AND INDICATE THE GENERAL AND APPROXIMATE LOCATION. THE LAYOUT DOES NOT SHOW THE TOTAL NUMBER OF RACEWAYS OR BOXES FOR THE CIRCUITS REQUIRED, NOR ARE THE LOCATIONS OF INDICATED RUNS INTENDED TO SHOW THE ACTUAL ROUTING OF THE RACEWAYS.
6. ALL CONDUCTOR SIZES ARE BASED ON COPPER UNLESS OTHERWISE NOTED.
7. SUPPORT ALL CONDUITS FROM STRUCTURAL SLABS, WALLS, STRUCTURAL MEMBERS AND ROOF JOISTS. DO NOT SUPPORT CONDUITS FROM CEILING TIE WIRES, DUCTWORK, PIPING OR OTHER NONSTRUCTURAL MEMBERS.

ELECTRICAL SYMBOLS

- F1 — PENDANT MOUNTED FIXTURE
- EQUIPMENT CONNECTION AS NOTED
- MOTOR OUTLET
- SPECIAL OUTLET AS NOTED
- SAFETY DISCONNECT SWITCH, SEE EQUIPMENT SCHEDULE
- bS — SINGLE POLE SWITCH, +48" OR AS NOTED. LOWERCASE LETTERING DENOTES SWITCH LEG
- AHU 1 — EQUIPMENT IDENTIFICATION
- EQUIPMENT NUMBER
- 3 — NOTE REFERENCE
- R — RELAY

ELECTRICAL ABBREVIATIONS

E	EXISTING ITEM TO REMAIN	N	NEW DEVICE IN EXISTING LOCATION
		R	EXISTING ITEM TO BE REMOVED

ONE–LINE DIAGRAM

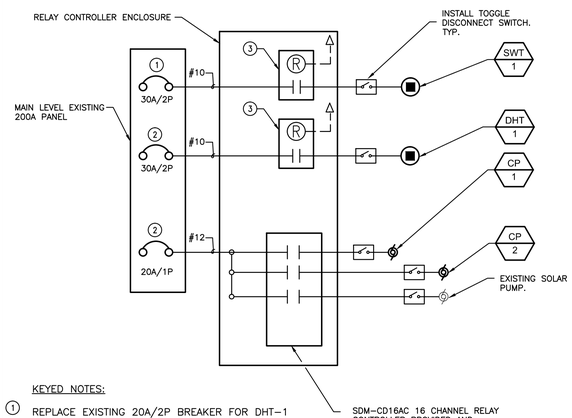

KEYED NOTES:

1. REPLACE EXISTING 20A/2P BREAKER FOR DHT–1 WITH NEW 30A/2P BREAKER.
2. CONNECT CIRCUIT TO EXISTING BREAKER IN EXISTING MAIN LEVEL PANELBORD.
3. PROVIDE AND INSTALL JAMECO ELECTRONICS 12 VOLT 140MA DOUBLE POLE SINGLE THROW POWER RELAY. T92P7D22–12. LOW VOLTAGE CONTROL WIRING BY OWNER.

EQUIPMENT SCHEDULE

TAG	ELECTRICAL CHARACTERISTICS VOLT/PHASE	MOTOR HP	KW	MCA	DISCONNECT TYPE	SIZE (AMPS)	NEMA RATING	FUSE (AMPS)	REMARKS
CP-1	120 / 1	1/8	-	-	CB				VIA RELAY - TOGGLE SWITCH
CP-2	120 / 1	1/8	-	-	CB				VIA RELAY - TOGGLE SWITCH
SWT	240 / 1	-	4.5	-	CB				VIA RELAY - TOGGLE SWITCH
DHW	240 / 1	-	4.5	-	CB				VIA RELAY - TOGGLE SWITCH

ABBREVIATIONS:

CB	CIRCUIT BREAKER IN PANELBOARD
DS	NON-FUSED DISCONNECT SWITCH
FS	FUSE STAT SWITCH
INT	INTEGRAL WITH EQUIPMENT FROM FACTORY
CP	CORD AND PLUG

LIGHT FIXTURE SCHEDULE

FIXTURE TYPE	DESCRIPTION	MANUFACTURER	CATALOG NUMBER	LAMP TYPE	LAMP QTY	FIXTURE LOAD	FIXTURE VOLTS	APPROVED EQUALS
F1	LED LENSED STRIP FIXTURE. 22-GAUGE DIE-FORMED C.R.S. HOUSING. ALL PARTS PAINTED AFTER FABRICATION. ACRYLIC #12 LENS. SUSPENDED MOUNT. PROVIDE WITH (2) Y HANGERS AND (2) 2' CHAINS. COORDINATE MOUNTING LOCATION AND HEIGHT WITH OWNER. MINIMUM 2000 LUMENS AND AT LEAST 80 CRI AT 4,000K CCT. MINIMUM 5 YEAR WARRANTY.	WILLIAMS	75L-4-LED*PH20/840-A12125-VBY-2-EDD*PH-UNV	LED	AS PROVIDED BY MANUFACTURER	24	120/277	AS APPROVED BY ENGINEER

ELECTRICAL DETAILS

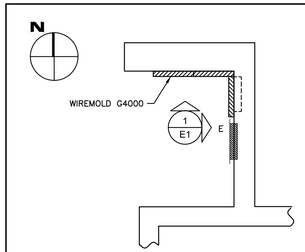

1 WIRING – DATA LOGGER CLOSET AND ENCLOSURE
NOT TO SCALE

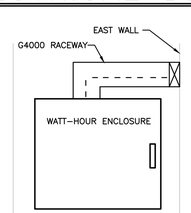

1 E1 LOCATION – NORTH WALL
NOT TO SCALE

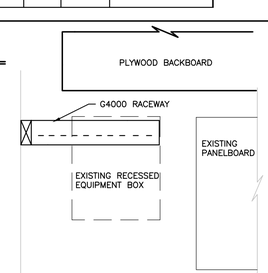

1 E1 LOCATION – EAST WALL
NOT TO SCALE

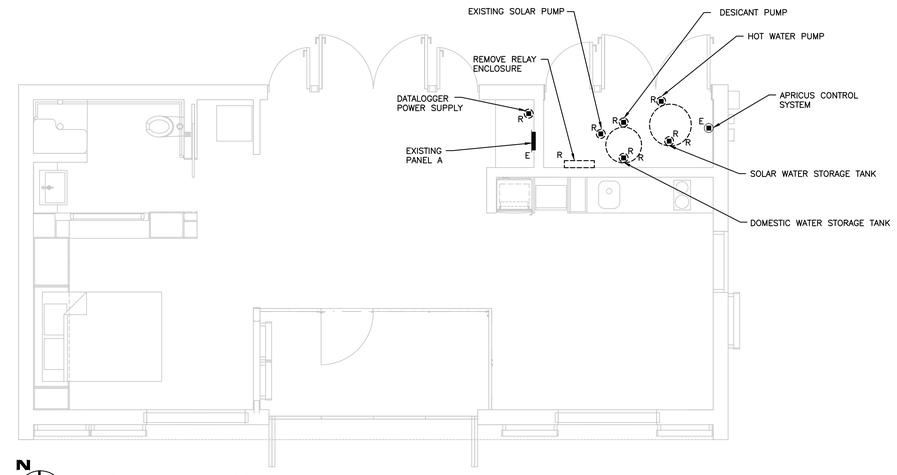

N
ELECTRICAL DEMO FLOOR PLAN
SCALE: 1/4" = 1'–0"

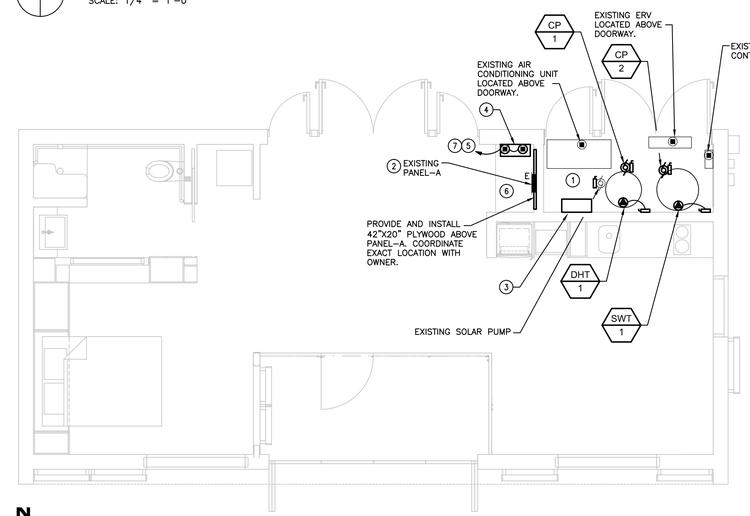

N
ELECTRICAL FLOOR PLAN
SCALE: 1/4" = 1'–0"

KEYED NOTES:

1. PROVIDE NEW PRINTED LABELS FOR EXISTING AND NEW EQUIPMENT, RECEPTACLES, RELAYS, AND PUMPS.
2. PROVIDE NEW CIRCUIT LABELS AND SCHEDULE FOR EXISTING PANEL–A.
3. PROVIDE AND INSTALL AUTOMATION DIRECT 'N1C202008LP' RELAY CONTROLLER ENCLOSURE AND 'N1P2020' SUB–PANEL. COORDINATE HEIGHT OF INSTALLATION WITH OWNER.
4. PROVIDE AND INSTALL AUTOMATION DIRECT 'N1C202408LP' WATT–HOUR METER ENCLOSURE AND 'N1P02024' SUB–PANEL. INSTALL AT OR BELOW HEIGHT OF EXISTING PANEL–A.
5. EXTEND EXISTING DATA LOGGER CONTROL CIRCUIT AND CONDUIT TO NEW WATT–HOUR METER ENCLOSURE. PROVIDE AND CONNECT AUTOMATION DIRECT 'PSC–12–060' 12VDC POWER SUPPLY AND 'PSB24–060–P' 24VDC POWER SUPPLY TO EXISTING CIRCUIT. INSTALL BOTH SUPPLIES IN NEW WATT–HOUR METER ENCLOSURE.
6. PROVIDE NEW 3" SLEEVE IN WALL BELOW EXISTING PANEL–A. COORDINATE EXACT LOCATION WITH OWNER. ALL NEW CONTROL WIRES SHALL BE FED THROUGH THIS OPENING.
7. RELOCATE (10) EXISTING WATTNODE ADVANCE PULSE METERS AND ALL OTHER LINE VOLTAGE CONNECTED DATA LOGGER COMPONENTS TO NEW WATT–HOUR ENCLOSURE. ALL CURRENT TRANSFORMER WIRES TO BE ROUTED THROUGH NEW G4000 WIREMOLD. LOW VOLTAGE COMPONENTS TO BE RELOCATED BY OWNER. SEE DETAIL 1 FOR FURTHER EXPLANATION.

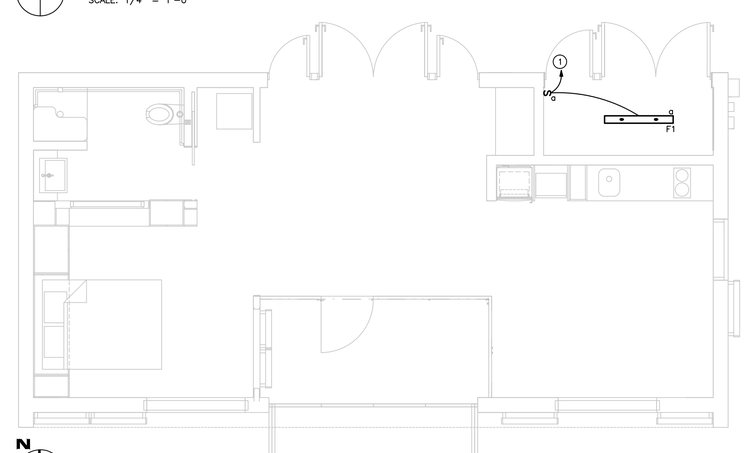

N
LIGHTING FLOOR PLAN
SCALE: 1/4" = 1'–0"

KEYED NOTES:

1. CONNECT NEW F1 FIXTURE TO EXISTING 120V 1/P CIRCUIT. COORDINATE LOCATION AND HEIGHT WITH OWNER.

CONSULTANT:
KCL Engineering
2630 Westown Parkway
Suite 220
West Des Moines, Iowa 52266
info@kclengineering.com
515.724.7938

IOWA DEPARTMENT OF NATURAL RESOURCES
ENGINEERING SERVICES - WALLACE BUILING
502 E. 9TH ST., DES MOINES, IA 50319-0034
P: 515.281.5918
F: 515.281.8685

ELECTRICAL FLOOR PLANS

MECHANICAL ROOM RENOVATIONS FOR:
HCR ACTIVITY CENTER
HONEY CREEK RESORT
APPANOOSE COUNTY, IOWA

NO.	BY / DATE	REVISION

DRAWN BY: JL	PROJECT NUMBER: 13-05-04-02
CHK'D BY: JD	DATE: 1.24.2014

SHEET No: E1.0

MECHANICAL SYMBOLS

CW	COLD WATER
HW	HOT WATER SUPPLY
D	DRAIN
HWS	LOW TEMPERATURE HOT WATER SUPPLY
HWR	LOW TEMPERATURE HOT WATER RETURN
SWS	SOLAR LOOP WATER SUPPLY
SWR	SOLAR LOOP WATER RETURN
T	LOCATION OF THERMOSTAT/ROOM TEMPERATURE SENSOR +48" OR AS NOTED
H	LOCATION OF HUMIDISTAT/ROOM HUMIDITY SENSOR +48" OR AS NOTED
HHP A	EQUIPMENT TAG
3	NOTE REFERENCE

NOTE: NOT ALL SYMBOLS APPLY TO THIS PROJECT.

	UNION
MV	AIR VENT – MANUAL
AV	AIR VENT – AUTOMATIC
T	TEMPERATURE SENSOR WITH THERMOWELL
T	DIAL THERMOMETER
FM	FLOW METER
	STRAINER
	CHECK VALVE
	RISER DOWN (ELBOW)
	RISER DOWN (TEE)
	RISER UP (ELBOW)
	NEW PIPING
	SHUT OFF VALVE (REFER TO SPECS)
	POINT OF CONNECTION OF NEW WORK TO EXISTING OR POINT OF DISCONNECTION OF DEMOLITION WORK
	EXISTING PIPING TO REMAIN
	EXISTING PIPING TO BE REMOVED

NOTE: NOT ALL SYMBOLS APPLY TO THIS PROJECT.

MECHANICAL ABBREVIATIONS

ABSOR	ABSORPTION	EQUIP	EQUIPMENT	LDBT	LEAVING DRY BULB TEMPERATURE
ACU	AIR CONDITIONING UNIT	EST	EXTERNAL STATIC PRESSURE	LWT	LEAVING WATER TEMPERATURE
AD	ACCESS DOOR OR AREA DRAIN	EWBT	ENTERING WET BULB TEMPERATURE	LWBT	LEAVING WET BULB TEMPERATURE
AFF	ABOVE FINISHED FLOOR	EWC	ELECTRIC WATER COOLER	MB	MOP BASIN
AFG	ABOVE FINISHED GRADE	EWT	ENTERING WATER TEMPERATURE	MBH	1000 BTUH
AHU	AIR HANDLING UNIT	EX	EXISTING	MC	MECHANICAL CONTRACTOR
AV	AIR VENT	EXH	EXHAUST	MECH	MECHANICAL
BOT	BOTTOM	EXP	EXPANSION	MH	MANHOLE
BTU	BRITISH THERMAL UNIT	FAI	FRESH AIR INTAKE	NTS	NOT TO SCALE
BTUH	BTU PER HOUR	FCU	FAN COIL UNIT	OA	OUTSIDE AIR
CA	COMPRESSED AIR	FD	FLOOR DRAIN	OD	OVERFLOW ROOF DRAIN
CB	CATCH BASIN	FLEX	FLEXIBLE	PSI	POUNDS PER SQUARE INCH
CENT	CENTRIFUGAL	FLR	FLOOR	PRV	POWER ROOF VENTILATOR
CFM	CUBIC FEET PER MINUTE	FPM	FEET PER MINUTE	PRV	PRESSURE REDUCING VALVE
CI	CAST IRON	FPS	FEET PER SECOND	PV	PRESSURE VENT
CL	CENTER LINE	FS	FLOOR SINK	PVC	POLYVINYL CHLORIDE
COND	CONDENSATE	FT	FINTUBE	RA	RETURN AIR
CO	CLEAN OUT	FTG	FOOTING	RD	ROOF DRAIN
CONC	CONCRETE	GA	GAGE	RH	RELATIVE HUMIDITY
CONTR	CONTRACTOR	GAL	GALLON	RTU	ROOF TOP UNIT
CP	CONDENSATE PUMP	GALV	GALVANIZED	RV	RELIEF VALVE
CU	COPPER	GC	GENERAL CONTRACTOR	SK	SINK
CUH	CABINET UNIT HEATER	GPH	GALLONS PER HOUR	SA	SUPPLY AIR
CWP	CIRCULATING WATER PUMP	GPM	GALLONS PER MINUTE	SH	SHOWER
DDC	DIRECT DIGITAL CONTROLS	H	WALL HYDRANT	SP	STATIC PRESSURE
DN	DOWN	HR	HOUR	TCC	TEMPERATURE CONTROL CONTRACTOR
DR	DRAIN	HTG	HEATING	TYP	TYPICAL
DS	DOWNSPOUT	HB	HOSE BIBB	UC	UNDER CUT DOOR (3/4")
EA	EXHAUST AIR	ISP	INTERNAL STATIC PRESSURE	UH	UNIT HEATER
EAT	ENTERING AIR TEMPERATURE	JR	JANITOR RECEPTOR	UR	URINAL
EC	ELECTRICAL CONTRACTOR	LAV	LAVATORY	UV	UNIT VENTILATOR
EDBT	ENTERING DRY BULB TEMPERATURE			VTR	VENT THROUGH ROOF
EF	EXHAUST FAN			WC	WATER CLOSET
EJ	EXPANSION JOINT			WH	WATER HEATER

NOTE: NOT ALL ABBREVIATIONS APPLY TO THIS PROJECT.

MECHANICAL DEMOLITION NOTES

MECHANICAL DEMOLITION DRAWINGS SHOWING EXISTING CONDITIONS HAVE BEEN PREPARED BASED ON FIELD OBSERVATION AND ORIGINAL DRAWINGS. ADDITIONAL COMPONENTS MAY EXIST WHICH DO NOT SHOW, AND SUCH ITEMS SHALL BE DEALT WITH IN A MANNER SIMILAR TO THOSE ITEMS WHICH DO SHOW. CONTRACTOR SHALL VISIT THE SITE AND BECOME FAMILIAR WITH EXISTING CONDITIONS.

CONTRACTOR SHALL THOROUGHLY FAMILIARIZE HIMSELF WITH EXISTING MECHANICAL SYSTEMS WHICH WILL BE AFFECTED BY THE DEMOLITION WORK. CONTRACTOR SHALL OBTAIN PERMISSION FROM OWNER'S REPRESENTATIVE TO SHUT OFF SERVICES OR SYSTEMS WHICH MAY AFFECT OTHER AREAS BEYOND THE LIMITS OF THE IMMEDIATE DEMOLITION AREA. SUCH PERMISSION WILL BE GRANTED ONLY AFTER OWNER'S REPRESENTATIVE IS INFORMED OF THE REASON FOR AND DURATION OF THE SHUTDOWN AND IS SATISFIED THAT THE SHUTDOWN CAN BE MADE WITH AS LITTLE INCONVENIENCE TO OTHER AREAS AS POSSIBLE.

PIPING, HANGERS, ETC., SHOWN ON PLANS SHALL BE REMOVED UNLESS NOTED OTHERWISE. REMOVAL SHALL BE DONE IN A TIMELY MANNER IN ACCORDANCE WITH THE GENERAL DEMOLITION WORK. COORDINATE WITH THE OWNER AND OTHER CONTRACTORS.

CONSULT WITH THE OWNER AT THE INCEPTION OF THE PROJECT TO DETERMINE DISPOSITION OF REMOVED EXISTING EQUIPMENT. ALL MOTORS, CONTROL BOARDS, SENSORS, STARTERS, AND OTHER SIMILAR EQUIPMENT REMOVED SHALL REMAIN THE PROPERTY OF THE OWNER AND SHALL BE TURNED OVER TO THE OWNER IN A STORAGE AREA TO BE DESIGNATED. EQUIPMENT BEING REMOVED SHALL BE HANDLED SO AS NOT TO FURTHER REDUCE ITS VALUE TO THE OWNER.

EQUIPMENT AND/OR MATERIALS SCHEDULED FOR ABANDONMENT AND REMOVAL ARE TO BECOME CONTRACTOR'S SALVAGE AND SHALL BE HAULED AWAY FROM THE SITE PROMPTLY. EXCEPTION SHALL BE THE EQUIPMENT THE OWNER WOULD LIKE TO SALVAGE.

REMOVE ALL ABANDONED PIPING. REFER TO ARCH DRAWINGS FOR PATCHING/PAINTING REQUIREMENTS.

HVAC GENERAL NOTES

MECHANICAL CONTRACTOR TO PROVIDE A COMPLETE HVAC SYSTEM, MECHANICAL EQUIPMENT, SUPPORTS, HANGERS AND ALL APPURTENANCES. INSTALL ALL EQUIPMENT PER MANUFACTURER'S RECOMMENDATIONS. INSTALL SYSTEM TO MEET ALL CITY AND STATE CODES AND REQUIREMENTS.

DRAWING PLANS, SCHEMATICS, AND DIAGRAMS INDICATE GENERAL LOCATION AND ARRANGEMENT OF PIPING SYSTEM. INDICATED PIPING LOCATIONS, CONFIGURATIONS, AND ARRANGEMENTS WERE USED TO SIZE PIPES AND CALCULATE FRICTION LOSS FOR PUMP SIZING AND FOR OTHER DESIGN CONSIDERATIONS.

PLUMBING GENERAL NOTES

MECHANICAL CONTRACTOR TO MODIFY EXISTING DOMESTIC WATER SYSTEM, INCLUDING, PIPE, INSULATION, HANGERS, SUPPORTS, EQUIPMENT, WATER HEATERS, MIXING VALVES, VALVES, AND ALL APPURTENANCES AS REQUIRED TO MEET THE INTENT OF THE DRAWINGS. INSTALL ALL EQUIPMENT PER MANUFACTURER'S RECOMMENDATIONS. SIZE AND INSTALL SYSTEM PER PLUMBING CODE. COMPLY WITH ALL LOCAL AND STATE CODES AND REQUIREMENTS.

DRAWING PLANS, SCHEMATICS, AND DIAGRAMS INDICATE GENERAL LOCATION AND ARRANGEMENT OF PLUMBING SYSTEM.

MECHANICAL GENERAL NOTES

COORDINATE LOCATION/INSTALLATION OF MECHANICAL AND ELECTRICAL WORK WITH ALL OTHER TRADES. NO ASPECT OF A SYSTEM INSTALLATION OR ITS ROUGH-IN SHALL COMMENCE UNTIL PROPER AND TIMELY COORDINATION WITH ALL TRADES ASSOCIATED WITH THE INSTALLATION HAS TRANSPIRED. ITEMS TO BE COORDINATED SHALL INCLUDE BUT NOT BE LIMITED TO: BUILDING STRUCTURE, SHEET METAL, ALL PIPING SYSTEMS, LIGHT FIXTURES, CONDUITS, ETC. REFER TO ALL GENERAL, MECHANICAL, AND ELECTRICAL DRAWINGS AND SPECIFICATIONS FOR THIS PROJECT.

INCORPORATE INTO INSTALLATION MECHANICAL SPECIFICATIONS, DRAWINGS, STATE AND LOCAL CODES, AND OTHER APPLICABLE REQUIREMENTS.

ON COMPLETION OF THE INSTALLATION, MECHANICAL CONTRACTOR SHALL COOPERATE WITH THE OWNER TO PROVIDE ANY NECESSARY ADJUSTING AND BALANCING TO OBTAIN PROPER OPERATION OF ALL EQUIPMENT AND SYSTEMS. CONTRACTOR SHALL PROVIDE ALL FACILITIES AND EQUIPMENT, AND MAKE ALL TESTS, REQUIRED FOR ADJUSTMENTS AND BALANCING TO ESTABLISH THE PROPER PERFORMANCE OF ANY PIECE OF EQUIPMENT.

PIPING SHALL NOT BLOCK CLEARANCES TO MECHANICAL EQUIPMENT. INSTALLING CONTRACTOR SHALL BE RESPONSIBLE FOR RELOCATING PIPING IF ACCESS CLEARANCES ARE OBSTRUCTED.

MECHANICAL WARRANTY NOTES

MECHANICAL CONTRACTOR SHALL WARRANT ALL EQUIPMENT AND INSTALLATION FOR A MINIMUM OF 1 YEAR FROM THE DATE OF SUBSTANTIAL COMPLETION. ALL DEFECTS THAT BECOME APPARENT WITHIN THE WARRANTY PERIOD SHALL BE REPAIRED BY THE MECHANICAL CONTRACTOR AS DIRECTED BY THE ENGINEER THROUGH THE OWNERS REPRESENTATIVE. WARRANTY WILL NOT OBLIGATE THE MECHANICAL CONTRACTOR TO REPAIR DAMAGE RESULTING FROM ACCIDENT OR IMPROPER OPERATION OR CARE ON THE PART OF THE OWNER AND NOT DUE TO DEFECTIVE MATERIAL. REFER TO SPECIFICATIONS FOR ADDITIONAL DETAILS AND OTHER WARRANTY INFORMATION.

© 2014 KCL Engineering L.L.C.
These documents have been prepared specifically for the DNR HONEY CREEK PROJECT
They are not suitable for use on other projects or in other locations without the expressed written approval and participation of KCL Engineering L.L.C. A limited license is granted to the owner/contractor to reproduce these documents or portions thereof, but only for use in connection with this project.
Unauthorized reproduction is prohibited.

CONSULTANT:
KCL Engineering
2620 Westown Parkway
Suite 220
West Des Moines, Iowa 50266
info@kclengineering.com
515.724.7938

IOWA DEPARTMENT OF NATURAL RESOURCES
ENGINEERING SERVICES - WALLACE BUILING
502 E. 9TH ST., DES MOINES, IA 50319-0034
P: 515.281.5918
F: 515.281.8685

MECHANICAL SYMBOLS AND NOTES

MECHANICAL ROOM RENOVATIONS FOR:
HCR ACTIVITY CENTER
HONEY CREEK RESORT
APPANOOSE COUNTY, IOWA

NO.	BY / DATE	REVISION

DRAWN BY: CB	PROJECT NUMBER: 13-05-04-02
CHK'D BY: JC	DATE: 1.24.2014

SHEET No: M0.0

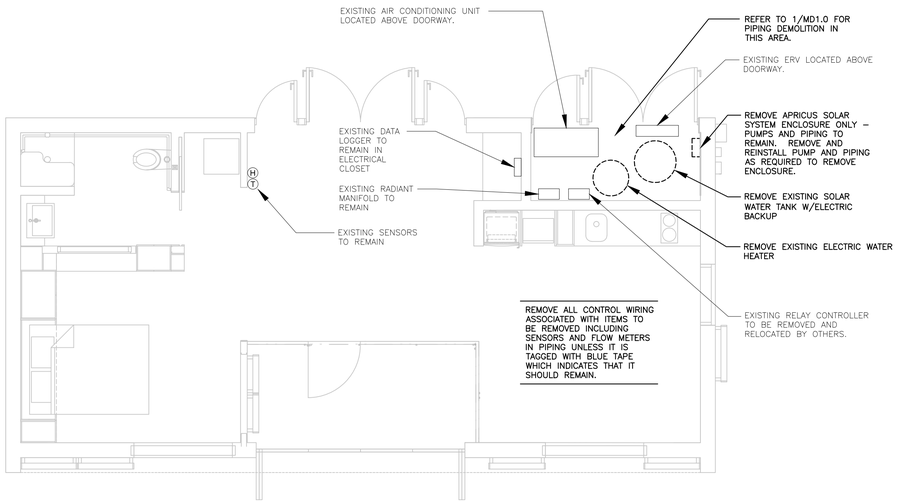

GENERAL NOTES

1. REFER TO M0.0 FOR GENERAL NOTES.
2. REMOVE ALL HANGERS, SUPPORTS AND APPURTENANCES FROM PIPING SHOWED TO BE DEMOLISHED.

N

MECHANICAL FLOOR DEMO PLAN

SCALE: 1/4" = 1'-0"

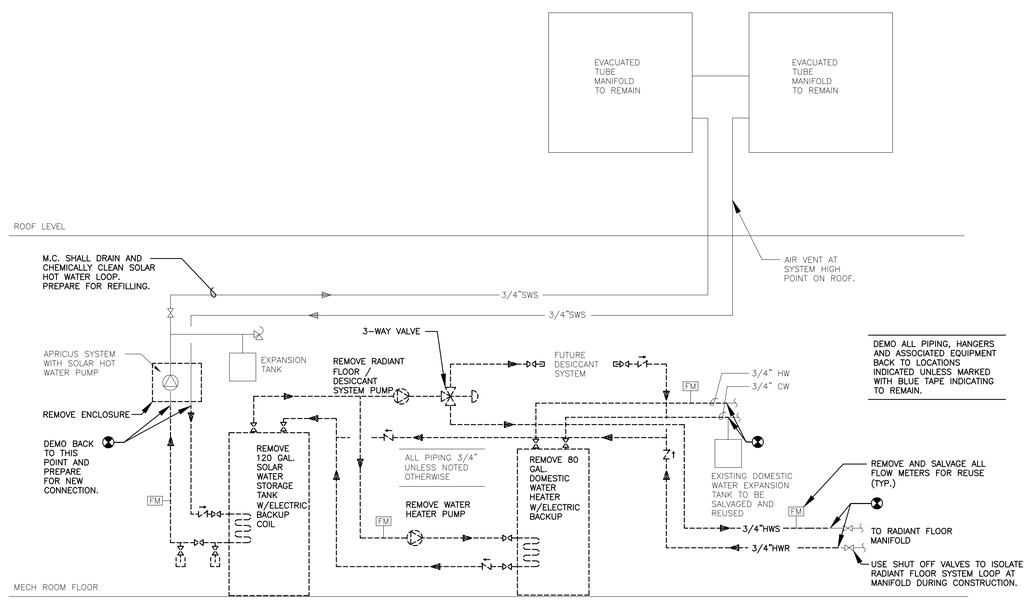

1 SOLAR DOMESTIC WATER HEATING PIPING DEMO DIAGRAM

NOT TO SCALE

CONSULTANT:
KCL Engineering
2630 Westown Parkway
Suite 220
West Des Moines, Iowa 50266
info@kclengineering.com
515.724.7938

IOWA DEPARTMENT OF NATURAL RESOURCES

ENGINEERING SERVICES - WALLACE BUILING
502 E. 9TH ST., DES MOINES, IA. 50319-0034
P: 515.281.5918
F: 515.281.8685

MECHANICAL DEMOLITION PLAN

MECHANICAL ROOM RENOVATIONS FOR:

HCR ACTIVITY CENTER

HONEY CREEK RESORT

APPANOOSE COUNTY, IOWA

NO.	BY / DATE	REVISION

DRAWN BY: CB	PROJECT NUMBER: 13-05-04-02
CHK'D BY: JC	DATE: 1.24.2014

SHEET No:

MD1.0

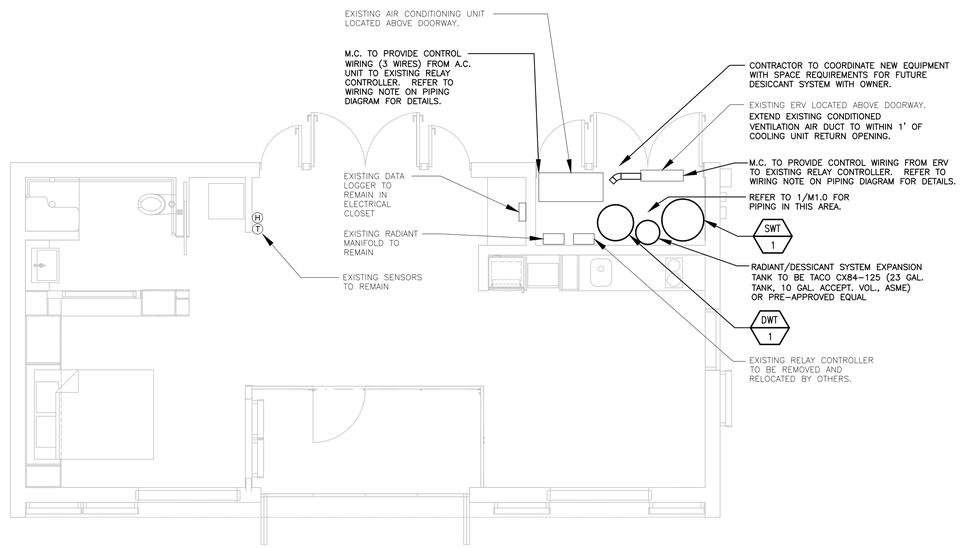

GENERAL NOTES

1. REFER TO M0.0 FOR GENERAL NOTES.
2. INSTALL ALL NEW CW/HW PLUMBING PIPING IN MECH ROOM TO MATCH MATERIAL, FITTINGS, HANGERS AND INSULATION TYPE OF EXISTING PIPING TO REMAIN. ALL PLUMBING PIPING IN MECH ROOM SHALL BE LABELED ACCORDING TO SPECIFICATION 15076.
3. DUCTWORK THAT IS MODIFIED FOR ERV SHALL MATCH EXISTING DUCTWORK MATERIAL, INSULATION, FITTING AND HANGER TYPE.
4. FOR CHECK VALVE REQUIREMENTS IN CW PIPING REFER TO SPECIFICATION 15120.
5. CONTRACTOR IS RESPONSIBLE FOR PROVIDING A METHOD OF CHEMICALLY CLEANING AND REFILLING SOLAR HEATING LOOP WHICH CONTAINS PROPYLENE GLYCOL. A PERMANENT GLYCOL FEEDER IS NOT AN OPTION DUE TO SPACE BUT A TEMPORARY ONE CAN BE USED. CAPPED/VALVED FILL LOCATIONS ARE INDICATED ON PIPING DIAGRAM. REFER TO SPECIFICATION 15181 FOR ADDITIONAL REQUIREMENTS.
6. CONTROL WIRING INSTRUMENTATION WIRES SHALL NOT BE SPLICED.
7. IF THE EXISTING INSTRUMENTATION CABLES ARE NOT LONG ENOUGH TO REACH TO THE RESPECTIVE COMPONENT IN THE DATALOGGER ENCLOSURE THEN THE CABLE SHALL BE REPLACED WITH AN IDENTICAL CABLE (MAKE AND MODEL) AS THE ONE IT WILL REPLACE THAT IS THE CORRECT LENGTH.

N

MECHANICAL FLOOR PLAN

SCALE: 1/4" = 1'-0"

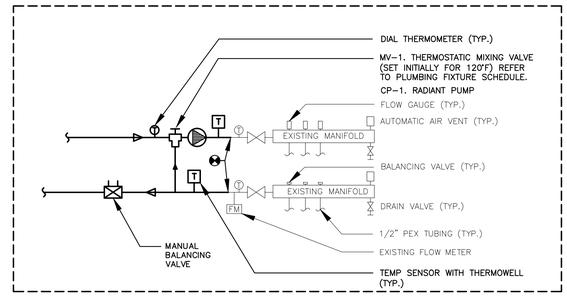

2 IN-FLOOR RADIANT SYSTEM DETAIL

NOT TO SCALE

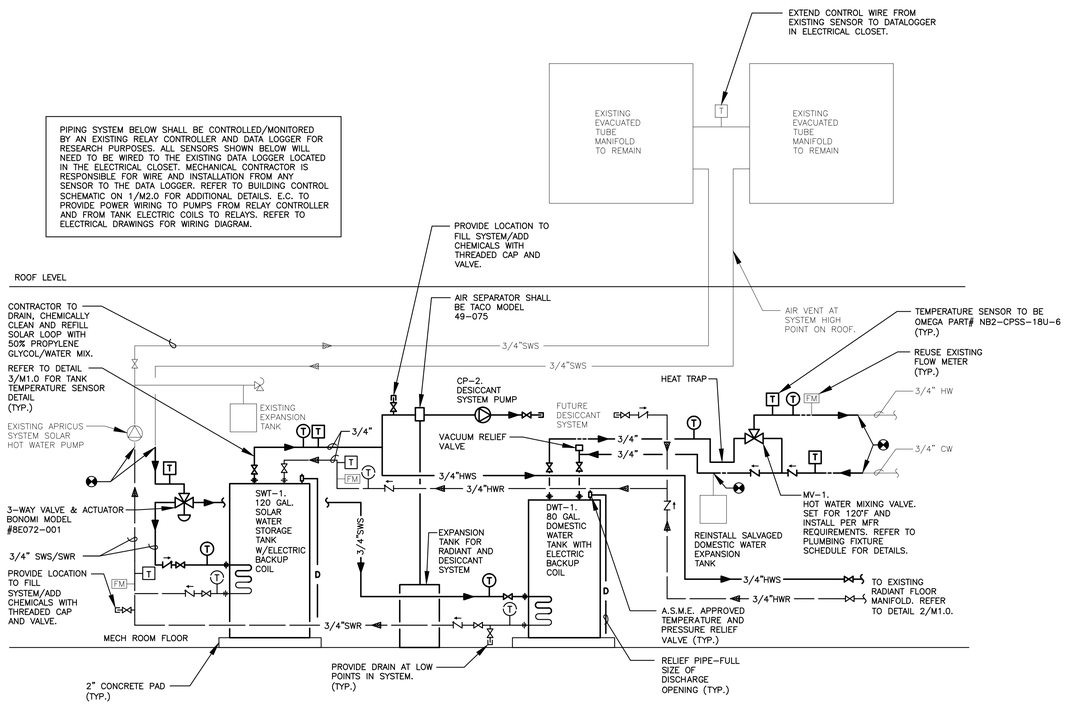

1 SOLAR WATER HEATING PIPING DIAGRAM

NOT TO SCALE

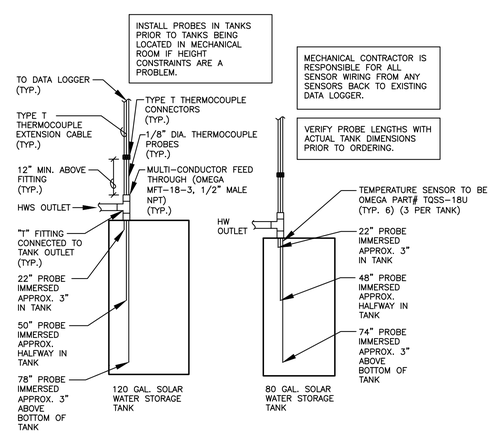

3 TANK TEMPERATURE SENSOR DETAIL

NOT TO SCALE

CONSULTANT:
KCL Engineering
2630 Westown Parkway
Suite 220
West Des Moines, Iowa 50266
info@kclengineering.com
515.724.7938

IOWA DEPARTMENT OF NATURAL RESOURCES
ENGINEERING SERVICES - WALLACE BUILING
502 E. 9TH ST., DES MOINES, IA 50319-0034
P: 515.281.5918
F: 515.281.8685

MECHANICAL FLOOR PLAN

MECHANICAL ROOM RENOVATIONS FOR:

HCR ACTIVITY CENTER

HONEY CREEK RESORT

APPANOOSE COUNTY, IOWA

NO.	BY / DATE	REVISION

DRAWN BY: CB	PROJECT NUMBER: 13-05-04-02
CHK'D BY: JC	DATE: 1.24.2014

SHEET No: M1.0

PUMP SCHEDULE

REFERENCE	CP-1	CP-2
MANUFACTURER	TACO	TACO
MODEL #	009F-IFC	009F-IFC
SERVES	RADIANT FLOOR SYSTEM	DESICCANT HOT WATER SYSTEM
GPM	2	2
TOTAL DEVELOPED HEAD (FT)	28	20
HP	1/8	1/8
PUMP RPM	3,450	3,450
VOLT/PHASE	120/1	120/1
NOTES	1, 2, 3	1, 2, 3

NOTES:
1. E.C. TO PROVIDE DISCONNECT.
2. PUMP TO BE CONTROLLED BY RELAY CONTROLLER / DATALOGGER.
3. PUMP TO BE PROVIDED WITH INTERNAL CHECK VALVE.

SOLAR WATER TANK WITH ELEC. COIL

REFERENCE	SWT-1
MANUFACTURER	RHEEM
MODEL #	82V120HE-1
SERVES	SOLAR HOT WATER SYSTEM
GALLONS	120
TANK APPROX. R VALUE	17.3
RECOVERY GPM 90F RISE	21
INPUT KW	4.50
VOLTAGE/PH	240 / 1
NOTES	1,2

NOTES:
1. UNIT TO BE CSA CERTIFIED AND ASME RATED T&P RELIEF VALVE
2. UNIT TO MEET REQUIREMENTS OF ASHRAE 90.1

SOLAR DOMESTIC WATER TANK WITH ELEC. COIL

REFERENCE	DWT-1
MANUFACTURER	RHEEM
MODEL #	81V80HE-1
SERVES	SOLAR HOT WATER SYSTEM
GALLONS	80
TANK APPROX. R VALUE	17.3
RECOVERY GPM 90F RISE	21
INPUT KW	4.50
VOLTAGE/PH	240 / 1
NOTES	1,2

NOTES:
1. UNIT TO BE CSA CERTIFIED AND ASME RATED T&P RELIEF VALVE
2. UNIT TO MEET REQUIREMENTS OF ASHRAE 90.1

PLUMBING FIXTURE SCHEDULE

REFERENCE	MFR	MODEL	DESCRIPTION	TRIM
MV-1	POWERS	LM496	PRIMARY THERMOSTATIC WATER MIXING VALVE WITH INTEGRAL CHECKS, 3/4" CONNECTIONS, 4 GPM AT 5 PSI PRESSURE DROP, 0.5 GPM MIN. FLOW PER ASSE 1069, 1070, ADJUSTABLE DISCHARGE TEMP. TEMP SET TO 120°F, MAX. HOT WATER TEMP OF 200°F. REFER TO SPECIFICATION 221119 FOR ADDITIONAL REQUIREMENTS.	NA

SENSOR WIRING SHALL BE OMEGA MODEL EXPP-T-20S-SLE TYPE T EXTENSION WIRE ONLY – NO SUBSTITUTIONS.

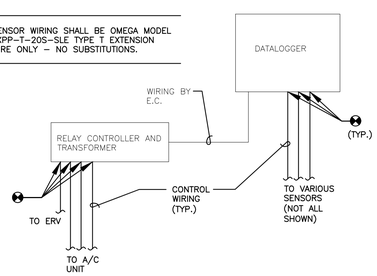

M.C. IS RESPONSIBLE FOR CONTROL WIRING FROM ERV AND A/C UNIT TO RELAY CONTROLLER AS WELL AS ALL CONTROL WIRING FROM ALL SENSORS AND FLOW METERS INDICATED ON THE PIPING DIAGRAM BACK TO THE DATA LOGGER. EXACT TERMINATION POINTS ON RELAY CONTROLLER AND DATALOGGER WILL NEED TO BE COORDINATED WITH THE OWNER'S RESEARCH TEAM PRIOR TO INSTALLATION.

ALL CONTROL WIRING SHALL BE RUN ALONG CEILING/WALLS NEATLY AND GROUPED TOGETHER WHERE POSSIBLE. WIRING DRAPED ACROSS ROOM IS NOT ACCEPTABLE.

REFER TO ELECTRICAL DRAWINGS FOR POWER WIRING BY E.C.

1 BUILDING CONTROL WIRING SCHEMATIC
NOT TO SCALE

CONSULTANT:
KCL Engineering
2630 Westown Parkway
Suite 220
West Des Moines, Iowa 50266
info@kclengineering.com
515.724.7938

IOWA DEPARTMENT OF NATURAL RESOURCES
ENGINEERING SERVICES - WALLACE BUILING
502 E. 9TH ST., DES MOINES, IA. 50319-0034
P: 515.281.5918
F: 515.281.8685

MECHANICAL SCHEDULES

MECHANICAL ROOM RENOVATIONS FOR:
HCR ACTIVITY CENTER
HONEY CREEK RESORT
APPANOOSE COUNTY, IOWA

NO.	BY / DATE	REVISION

DRAWN BY: CB
PROJECT NUMBER: 13-05-04-02
CHK'D BY: JC
DATE: 1.24.2014
SHEET No: M2.0