IOWA DEPARTMENT OF NATURAL RESOURCES

CONSTRUCTION DOCUMENTS FOR LACEY KEOSAUQUA SP LODGE ROOF REPLACEMENT VAN BUREN COUNTY, IOWA

PROJECT # 12-06-89-03

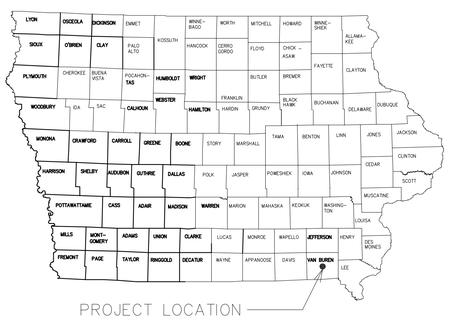

PROJECT LOCATION

LOCATION MAP

IOWA ONE CALL
800/292-8989
TOLL FREE
CALL - BEFORE - YOU DIG

PLANS PREPARED BY
ENGINEERING BUREAU
MANAGEMENT SERVICES DIVISION

SHEET INDEX

SHEET. NO.	SHEET TITLE
	ARCHITECTURAL
A-001	COVER SHEET
A-002	NOTES & SYMBOLS
A-110	ROOF PLAN
A-111	BUILDING ELEVATIONS

DIRECTORY

OWNER		DNR INSPECTOR	
COMPANY	IOWA DEPARTMENT OF NATURAL RESOURCES	COMPANY	IOWA DEPARTMENT OF NATURAL RESOURCES
ADDRESS	502 E. 9TH. ST.	ADDRESS	WILDCAT DEN SP
CITY,STATE,ZIP	DES MOINES, IA 50319	CITY,STATE,ZIP	MUSCATINE, IA 52761
CONTACT	N/A	CONTACT	BRUCE FLIPPIN
TELEPHONE	515.281.5918	TELEPHONE	515.250.3719
FAX	515.281.6794	FAX	–
EMAIL	N/A	EMAIL	BRUCE.FLIPPIN@DNR.IOWA.GOV
ARCHITECT			
COMPANY	IOWA DEPARTMENT OF NATURAL RESOURCES	COMPANY	–
ADDRESS	502 E. 9TH. ST.	ADDRESS	–
CITY,STATE,ZIP	DES MOINES, IA 50319	CITY,STATE,ZIP	–
CONTACT	RYAN RICHEY	CONTACT	–
TELEPHONE	515.979.0107	TELEPHONE	–
FAX	–	FAX	–
EMAIL	RYAN.RICHEY@DNR.IOWA.GOV	EMAIL	–
COMPANY	–	COMPANY	–
ADDRESS	–	ADDRESS	–
CITY,STATE,ZIP	–	CITY,STATE,ZIP	–
CONTACT	–	CONTACT	–
TELEPHONE	–	TELEPHONE	–
FAX	–	FAX	–
EMAIL	–	EMAIL	–
COMPANY	–	COMPANY	–
ADDRESS	–	ADDRESS	–
CITY,STATE,ZIP	–	CITY,STATE,ZIP	–
CONTACT	–	CONTACT	–
TELEPHONE	–	TELEPHONE	–
FAX	–	FAX	–
EMAIL	–	EMAIL	–

PROJECT DATA

BUILDING DATA

BUILDING:

ADDRESS: LACEY KEOSAUQUA STATE PARK
22895 LACEY TRAIL
KEOSAUQUA, IA 52565
USE – HISTORIC LODGE
BUILDING CONSTRUCTION – N/A
NUMBER OF STORIES – N/A
BUILDING HEIGHT – N/A
BUILDING AREA –5,500 SF
BUILDING OCCUPANCY – N/A

BUILDING CODES

PROJECT DESCRIPTION

HISTORIC LODGE AT LACEY KEOSAUQUA NEEDS SHINGLE REPLACEMENT AND NEW GUTTER SYSTEM. TO KEEP WITH THE ARCHITECTUAL STYLE OF THAT TIME, NEW COPPER FLASHING, RIDGE CAP AND 6" HALF-ROUND GUTTERS AND ROUND DOWNSPOUTS WILL BE USED FOR THIS PROJECT. LANDMARK TL WEATHERED WOOD SHINGLES WILL BE PLACED ON THE ROOF WITH NEW SHEATHING WHERE NECESSARY. A NEW FASCIA BOARD AND SOFFT BOARD WILL BE PLACED ON THIS BUILDING AS WELL.

AUTHORIZATION TO BID

AUTHORIZATION – PARKS | WILDLIFE | FISHERIES | LAW ENFORCEMENT | FORESTRY DATE

ENGINEERING BUREAU CHIEF DATE

BID ITEMS

ITEM NUMBER	DESCRIPTION	ESTIMATED QUANTITY
1	RESHINGLE ENTIRE ROOF WITH LANDMARK TL WEATHERED WOOD SHINGLES, 16OZ LEAD COATED COPPER DRIP EDGE, VALLEY FLASHING AND RIDGE CAP	1 LUMP SUM
2	NEW ROOF SHEATHING OVER ENTIRE ROOF WITH 30LB FELT AND WATER & ICE SHIELD 24 INCHES FROM EAVES AND RIDGES	1 LUMP SUM
3	NEW 6" COPPER HALF-ROUND GUTTERS AND ROUND DOWN SPOUTS	1 LUMP SUM
4	NEW 2X CEDAR FASCIA AROUND ENTIRE PERIMETER OF ROOF, PAINT TO MATCH BUILDING	1 LUMP SUM
5	REMOVE EXISTING SOFFIT AND REPLACE WITH NEW FIBER CEMENT BOARD SOFFIT, PAINT TO MATCH BUILDING	1 LUMP SUM
6	NEW 16OZ LEAD COATED COPPER STEP FLASHING AND NEW COPPER CRICKETS AROUND BOTH CHIMNEY STACKS	1 LUMP SUM
ALT#1	6" GUTTERS AND DOWN SPOUTS TO BE ALUMINUM	1 LUMP SUM

CONSULTANT:

IOWA DEPARTMENT OF NATURAL RESOURCES
ENGINEERING SERVICES - WALLACE BUILING
502 E. 9TH ST., DES MOINES, IA 50319-0034
P: 515.281.5918
F: 515.281.8685

COVER SHEET

ROOF REPLACEMENT FOR:

LACEY KEOSAUQUA LODGE:

VAN BUREN COUNTY, IOWA

22895 LACEY TRAIL, KEOSAUQUA

NO.	BY: DATE	REVISION

DRAWN BY:

PROJECT NUMBER: 12-06-89-03

CHK'D BY:

DATE: 7.24.2013

SHEET No:

A-001

DIMENSION NOTES

1. IN INTERIOR SPACES THE ACTUAL DIMENSIONS MAY BE LESS IMPORTANT THAN IF AT TWO ELEMENTS IN THE BUILDING WERE TO BE EQUAL. IN THESE CASES, THE WORD "EQUAL OR EQ" IS USED IN LIEU OF THE ACTUAL DIMENSIONS.
2. WHEN A ROOM CENTERLINE IS INDICATED ONLY ONE SIDE OF THE ROOMS ELEMENTS MAY BE DIMENSIONED.
3. COLUMN IDENTIFICATION: DETAILS WILL GOVERN ALL DIMENSIONS AND NO DIMENSIONS WILL BE SHOWN ON SMALL SCALE PLANS.
4. PARTITION CENTERED ON COLUMN OR GRID LINES WILL NOT BE DIMENSIONED ON SMALL SCALE PLANS.
5. PARTITION WITH A FINISHED FACE FLUSH WITH FINISH FACE OF COLUMN WILL NOT be DIMENSIONED ON SMALL SCALE PLANS.
6. PARTITION FINISH FACE ON COLUMN OR GRID LINE WILL NOT BE DIMENSIONED ON SMALL SCALE PLANS .
7. WHEN ONE JAMB OCCURS AT A COLUMN OR GRID LINE NO DIMENSIONS WILL BE SHOWN ON THE SMALL SCALE PLANS. THE OPENING WIDTH WILL BE GOVERNED BY CRITERIA OR SCHEDULES.
8. WHEN NEITHER JAMB OCCURS AT A COLUMN OR GRID LINE ONE JAMB WILL BE DIMENSIONED.
9. DOOR LOCATIONS ARE TO BE LOCATED BY ONE OF FOLLOWING:
   a. ONE JAMB FACE LOCATED BY A PARTITION AT RIGHT ANGLE. 4"TYPICAL UNLESS INDICATED ON PLAN.
   b. OR AS DIMENSIONED ON PLAN.
10. PARTITIONS ARE DIMENSIONED TO FACE OF CMU OR FACE OF STUD UNLESS OTHERWISE NOTED.
11. DIMENSIONS ARE INDICATED IN THE DOCUMENTS. THE DRAWINGS SHALL NOT BE SCALED FOR DIMENSIONS.

MATERIAL LEGEND

EARTH
COMPACTED EARTH
GRASS
GRAVEL
clay
fence
turf block
pavers
CONCRETE MASONRY UNIT
metal stud
PARTICLE BOARD
PLYWOOD
BATT INSULATION
ACOUSTICAL CEILING TILE
plastic
carpet
GYPSUM / STUCCO
grout
sand
foam INSULATION
RIGID INSULATION
ALUMINUM
STEEL
FINISHED WOOD
brick
CONCRETE
ASPHALT
cast stone
stone
glass
WOOD BLOCKING
CONTINUOUS WOOd

SYMBOL LEGEND

NORTH AAROW

00 TITLE
SCALE: 0 = 0'-0"
DRAWING / DETAIL IDENTIFICATION

00
A-000
SECTION REFERENCE

00
A-000
DETAIL REFERENCE

00
A-000
EXTERIOR ELEVATION

00/A-100
INTERIOR ELEVATION

ELEVATION : 0'-0"
DESCRIPTION1
ELEVATION TARGET

1
A
COLUMN GRID

00
A-000
00
A-000
MATCH LINES

ROOM
000
ROOM/SPACE IDENTIFICATION

100
DOOR TAG

00
WINDOW TAG

00
WALL TYPE REFERENCE

00
KEYNOTE NUMBER -NEW C.S.I. DIVISION/KEY

00
KEYNOTE - DEMOLITION

00
KEYNOTE - NEW/RENOVATION

00
KEYNOTE - FINISH/ACCESSORY

℄
PROPERTY LINE REFERENCE

℄
CENTER LINE REFERENCE

0"
LEVEL CHANGE REFERENCE

DETAIL CUT LINE

1
REVISION NUMBER AND CLOUD

GENERAL NOTES

THE FOLLOWING GENERAL NOTES SHALL PERTAIN TO THE ENTIRE SET OF CONTRACT DOCUMENTS

1. A GENERAL CONTRACTOR SHALL NOTE THAT THE ARCHITECTURAL DRAWINGS ARE ESTABLISHING A MINIMUM MATERIAL OR CONSTRUCTION METHOD STANDARD. THE GENERAL CONTRACTOR SHALL PROVIDE A BID PRICE BASED ON THE SPECIFIC MATERIALS NOTED.
2. DO NOT SCALE DRAWINGS. IF DIMENSIONS ARE IN QUESTION, THE CONTRACTOR SHALL BE RESPONSIBLE FOR OBTAINING CLARIFICATION FROM THE ARCHITECT BEFORE CONTINUING WITH CONSTRUCTION.
3. GENERAL CONTRACTOR AND SUBCONTRACTORS SHALL PERFORM THEIR WORK IN ACCORDANCE WITH ALL APPLICABLE CODES GOVERNING EACH TRADE.
4. THE CONTRACTOR SHALL MAINTAIN A CLEAN AND ORGANIZED JOB SITE, ACCEPTABLE TO THE OWNER.
5. THE CONTRACTOR SHALL COORDINATE THE SEQUENCE OF WORK WITH THE OWNER REPRESENTATIVE..
6. THERE SHALL BE NO DEVIATION BY THE GENERAL CONTRACTOR FROM THE CONSTRUCTION DOCUMENTS UNLESS APPROVED IN WRITING BY THE ARCHITECT.
7. EACH CONTRACTOR SHALL VERIFY EXISTING CONDITIONS IN THE FIELD PRIOR TO THE INITIATION OF WORK AND SHALL NOTIFY THE ARCHITECT OF ANY DISCREPANCIES OR CONDITIONS INTERFERING WITH THE ABILITY OF THE CONTRACTOR TO COMPLETE WORK AS OUTLINED ON THE CONSTRUCTION DRAWINGS.
8. ALL CONTRACTORS ARE REQUIRED TO COORDINATE THEIR WORK WITH OTHER TRADES. LACK OF THIS COORDINATION RESULTING IN ADDED COST TO THE CONTRACT WILL BE BORNE BY THE CONTRACTOR.
9. GENERAL CONTRACTOR SHALL BE RESPONSIBLE FOR KEEPING THE EXISTING BUILDING WATER TIGHT DURING CONSTRUCTION.
10. THE CONTRACTOR WILL VERIFY THAT EXIT EGRESS IS MAINTAINED FOR ALL OCCUPIED AREAS OF THE BUILDING THROUGHOUT ALL PHASES OF CONSTRUCTION.
11. PLAN DIMENSIONS ARE GIVEN TO FACE OF STUD OR BLOCK WALL. "CLEAR" DIMENSIONS ARE GIVEN TO THE FACE
12. THE OWNER WILL ASSUME ALL LIABILITY AND SHALL TAKE PERSONAL RESPONSIBILITY FOR ANY DECISIONS THAT THEY MAKE TO CHANGE OR ALTER THE CONSTRUCTION DOCUMENTS WITHOUT THE ARCHITECT'S WRITTEN APPROVAL.
13. PROTECT ALL EXISTING FINISHES AND MATERIALS TO REMAIN, IN ACCORDANCE WITH ACCEPTABLE TRADE PRACTICES, MANUFACTURER, RECOMMENDATIONS, OR AS DIRECTED BY THE ARCHITECT.
14. CUTTING OF EXISTING CONSTRUCTION FOR THE INSTALLATION OF ALL NEW WORK BY ALL TRADES, AND THE SUBSEQUENT PATCHING THEREOF, SHALL BE THE RESPONSIBILITY OF THE GENERAL CONTRACTOR, WHETHER THE WORK IS DONE BY HIS OWN FORCES OR NOT. GRINDING OF MATERIALS FOR REMOVAL SHALL NOT BE PERMITTED. CUTTING SHALL BE TO STRAIGHT LINE. UNWORKMAN-LIKE CUTTING, DAMAGE RESULTING THEREFROM AND UNACCEPTABLE PATCHING SHALL BE REPAIRED AND/OR REPLACED TO AN ACCEPTABLE CONDITION APPROVED BY THE ARCHITECT. A OWNER PROJECT REPRESENTATIVE SHALL BE NOTIFIED PRIOR TO CUTTING OF ANY STRUCTURAL ITEM (I.E. CONCRETE FLOOR, MASONRY, WALL, ETC.) WITHIN THE EXISTING BUILDING. METHOD OF CUTTING SHALL BE APPROVED BY THE OWNER PROJECT REPRESENTATIVE.
15. PATCHING MATERIAL SHALL MATCH EXISTING ADJACENT MATERIALS AS CLOSELY AS POSSIBLE IN COLOR, PATTERNS, AND/OR TEXTURES.
16. ALL SALVAGE MATERIALS REMOVED SHALL REMAIN THE PROPERTY OF THE OWNER. ALL NON-SALVAGE CONSTRUCTION MATERIALS AND DEBRIS FROM DEMOLITION WORK SHALL BE REMOVED FROM THE SITE AS WORK PROGRESSES, UNLESS OTHERWISE NOTED.
17. ISOLATE ALL DISSIMILAR METALS. G SHALL REQUEST APPROVAL BY THE ARCHITECT FOR MATERIALS USED FOR THIS PURPOSE, PRIOR TO INSTALLATION.
18. SEALANTS SHALL BE COMPATIBLE WITH ADJACENT SURFACE(S) THAT ARE IN CONTACT. REFER TO SPECIFICATIONS FOR APPROVED MANUFACTURERS AND PROCEDURES.
19. CAULK JOINTS OF DISSIMILAR EXPOSED TO VIEW MATERIALS AS REQUIRED BY THE ARCHITECT.
20. ALL DOOR HARDWARE TO BE FL. ADA COMPLIANT.
21. ALL EXTERIOR WALLS, DOORS AND WINDOWS ARE EXISTING U.N.O.
22. ALL FINISHES TO BE PER CLASS INDICATED ON A-004
23. NO CONSTRUCTION SHALL OCCUR WITHOUT SHOP DRAWING APPROVAL. SHOP DRAWINGS TO BE PROVIDED TO ARCHITECT FOR REVIEW UPON BEING REVIEWED AND SIGNED/DATED BY THE GENERAL CONTRACTOR AND SHALL INCLUDE BUT NOT BE LIMITED TO THE FOLLOWING ITEMS:
   - CABINETRY MILLWORK
   - RUNNING TRIM AND CASING PROFILES
   - PAINT/LAMINATE COLOR SAMPLES
   - ACOUSTICAL CEILING AND GRID
   - TOILET ACCESSORIES
   - KITCHEN EQUIPMENT
   - ROOF PENETRATIONS
   - HVAC EQUIPMENT
   - PLUMBING EQUIPMENT AND FIXTURES
   - ELECTRICAL EQUIPMENT AND FIXTURES
24. PRIOR TO COMMENCING WORK, THE CONTRACTOR SHALL SUBMIT (2) COPIES OF MATERIAL SAFETY DATA SHEETS (MSDS) FOR ALL PRODUCTS USED TO PERFORM THE WORK.

ABBREVIATIONS

ABV	ABOVE
AFF	ABOVE FINISH FLOOR
ACT	ACOUSTICAL CEILING TILE
AHU	AIR HANDLER UNIT
AL	ALUMINUM
AB	ANCHOR BOLT
@	AT
BM	BEAM
BRG	BEARING
BLK	BLOCK
BD	BOARD
BTM	BOTTOM
BLDG	BUILDING
BUR	BUILT-UP ROOF
CAB	CABINET
CPT	CARPET
CF	CEILING FINISH
CIP	CAST IN PLACE
CLG	CEILING
CL	CENTER LINE
CT	CERAMIC TILE
CLR	CLEAR
COL	COLUMN
CONC	CONCRETE
CMU	CONCRETE MASONRY UNIT
CONT	CONTINUOUS
CJ	CONTROL JOINT
DIA	DIAMETER
DEMO	DEMOLITION
DR	DOOR
DN	DOWN
DS	DOWNSPOUT
DWG	DRAWINGS
ELEC	ELECTRICAL
EWC	ELECTRIC WATER COOLER
ELEV	ELEVATION
EQ	EQUAL
EXIST	EXISTING
EJ	EXPANSION JOINT
EXT	EXTERIOR
FIN	FINISH
FV	FIELD VERIFY
FE	FIRE EXTINGUISHER
FLR	FLOOR
FD	FLOOR DRAIN
FTG	FOOTING
FR	FIRE RETARDANT
GA	GAUGE
GC	GENERAL CONTRACTOR
GALV	GALVANIZED
GFI	GROUND FAULT INTERRUPT
GYP	GYPSUM
HC	HANDICAPPED
HDW	HARDWARE
HT	HEIGHT
HDR	HEADER
HM	HOLLOW METAL
IC	INSTALLED BY CONTRACTOR
IO	INSTALLED BY OWNER
INSUL	INSULATION
INT	INTERIOR
JAN	JANITOR
JT	JOINT
LAM	LAMINATED
LF	LINEAR FEET
MANUF	MANUFACTURER
MAX	MAXIMUM
MO	MASONRY OPENING
MECH	MECHANICAL
MEMB	MEMBRANE
MTL	METAL
MIN	MINIMUM
N/A	NOT APPLICABLE
NIC	NOT IN CONTRACT
NTS	NOT TO SCALE
#, NO	NUMBER
OA	OVERALL
OC	ON CENTER
OCC	OCCUPANCY
OPNG	OPENING
OPP	OPPOSITE
OH	OVERHANG
PAV	PAVERS
PNT	PAINTED
PR	PAIR
PBO	PURCHASED BY OWNER
PF	PRE-FINISHED/PRIMED
PL	PLATE
PLMB	PLUMBING
PLYWD	PLYWOOD
PT	PRESSURE TREATED
POR	POINT OF REFERENCE
QT	QUARRY TILE
R	RADIUS
RCP	REFLECTED CEILING PLAN
REINF	REINFORCED
RENO	RENOVATION
REQ'D	REQUIRED
RD	ROOF DRAIN
RM	ROOM
RO	ROUGH OPENING
S	STAIN
SECT	SECTION
SIM	SIMILAR
SC	SOLID CORE
ST	STUCCO
SPEC	SPECIFICATION
SF	SQUARE FOOT
SS	STAINLESS STEEL
STL	STEEL
STRUCT	STRUCTURAL
STD	STANDARD
TR	TRUSS
TG	TEMPERED GLASS
TEXT	TEXTURED
TYP	TYPICAL
T&G	TONGUE & GROOVE
T&B	TOP & BOTTOM
UL	UNDERWRITERS LAB
UNO	UNLESS NOTED OTHERWISE
VP	VAPOR BARRIER
VB	VINYL BASE
VCT	VINYL COMPOSITION-TILE
VWC	VINYL WALL COVERING
WC	WATER COOLER
WH	WATER HEATER
WWF	WELDED WIRE FABRIC
WD	WOOD
W/	WITH
W/O	WITHOUT

WALLTYPES

08 NOT USED
EXISTING WD STUD W/ INSUL.

07 NOT USED
EXISTING 6" WD STUD WITH FURRING

06 NOT USED
EXISTING 4" WD STUD

05 NOT USED
2 1/2" MTL. FURRING STUD

WALLTYPES

04 NOT USED
5 5/8" MTL. STUD

03 NOT USED
2 1/2" MTL FURRING STUD

02 NOT USED
5 5/8" MTL. STUD

01 NOT USED
2 1/2" MTL. FURRING STUD

CONSULTANT:

IOWA DEPARTMENT OF NATURAL RESOURCES
ENGINEERING SERVICES - WALLACE BUILING
502 E. 9TH ST., DES MOINES, IA 50319-0034
P: 515.281.5918
F: 515.281.8685

NOTES & SYMBOLS

ROOF REPLACEMENT FOR:
LACEY KEOSAUQUA LODGE:
VAN BUREN COUNTY, IOWA
22895 LACEY TRAIL, KEOSAUQUA

NO.	BY / DATE	REVISION

DRAWN BY:
PROJECT NUMBER: 12-06-89-03
CHK'D BY:
DATE: 7.24.2013
SHEET No: A-002

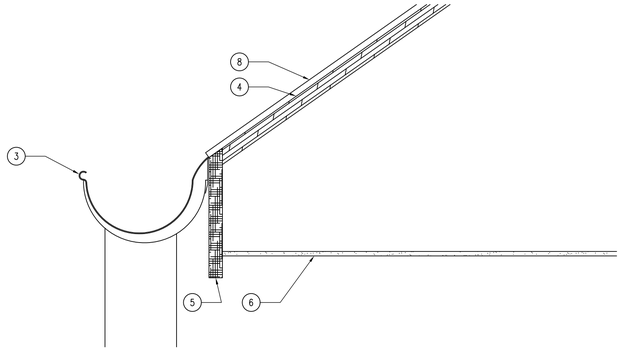

04 ROOF DETAIL – EAVE
SCALE: 3/16" = 1'-0"

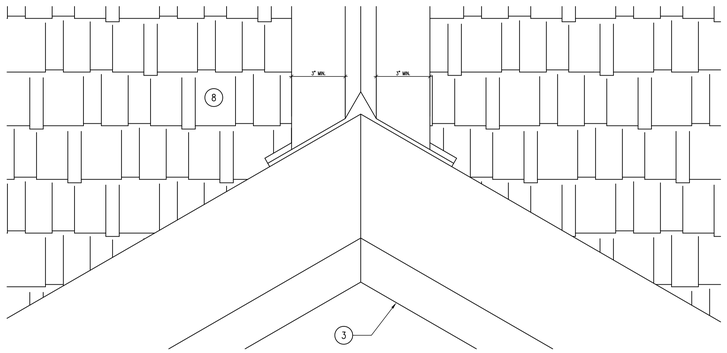

03 ROOF DETAIL – VALLEY
SCALE: 3/16" = 1'-0"

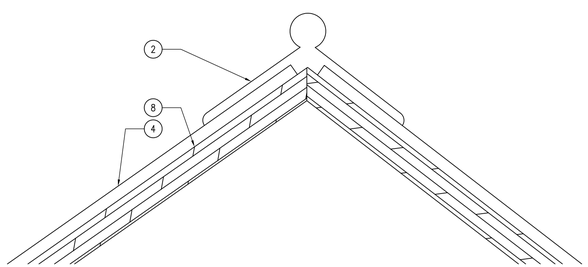

02 ROOF DETAIL – RIDGE
SCALE: 3/16" = 1'-0"

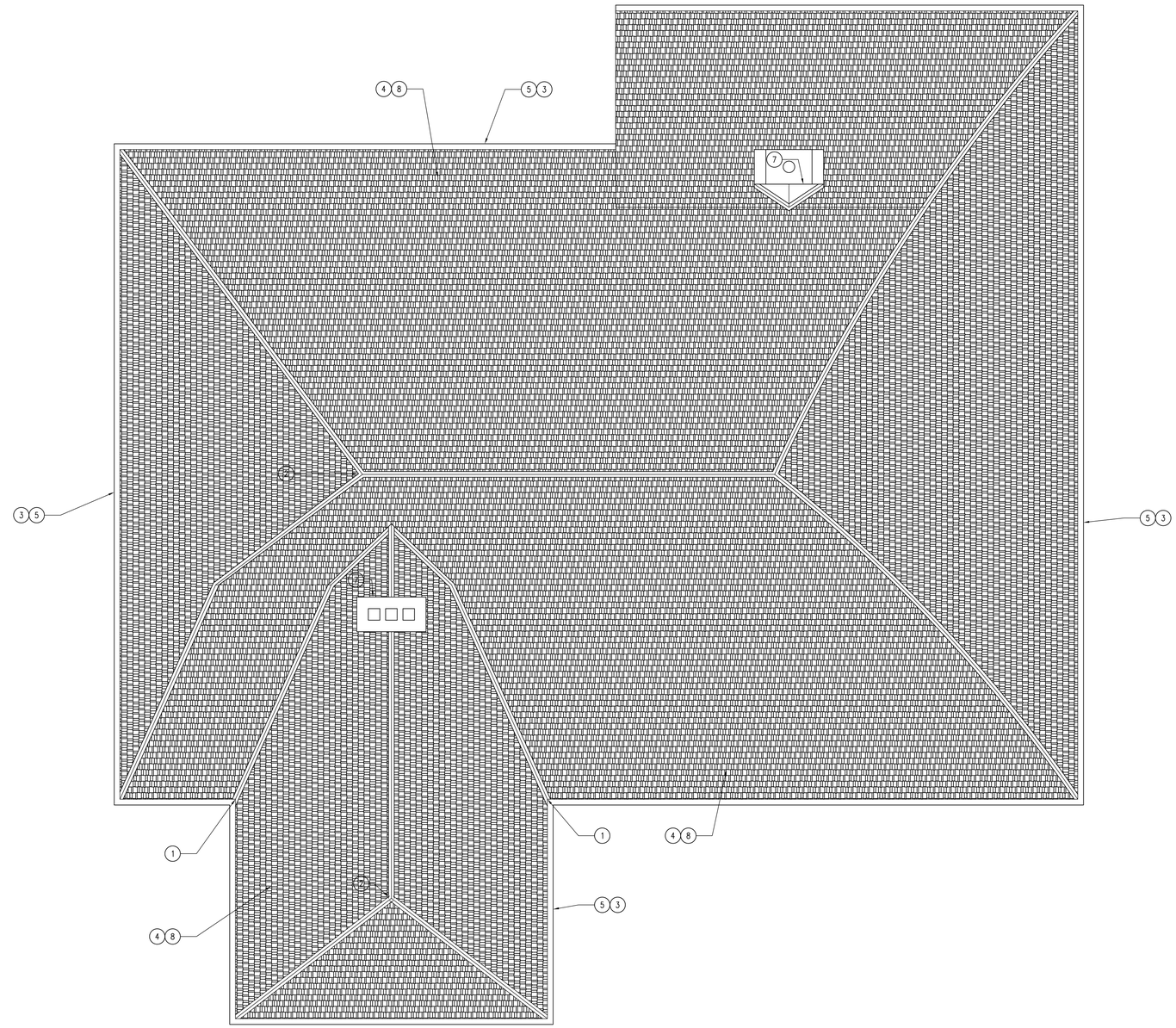

01 ROOF PLAN
SCALE: 3/16" = 1'-0"

KEYNOTES

1. 16OZ LEAD COATED COPPER OPEN-VALLEY FLASHING, EXPOSE 3" MINIMUM OF FLASHING EACH SIDE, SEE DETAIL 03/A-110.
2. 16OZ LEAD COATED COPPER RIDGE CAP ON ALL RIDGES, SEE DETAIL 02/A-110.
3. 6" LEAD COATED COPPER HALF-ROUND GUTTERS WITH 4" COPPER DOWNSPOUTS, EXTEND 20'-0" BEYOND BUILDING OF PER DNR INSPECTOR'S INSTRUCTIONS.
4. NEW 3/4" SHEATHING OVER ENTIRE ROOF WITH 30LB FELT WITH WATER & ICE SHEILD 24" FROM EAVES AND RIDGES.
5. NEW 2X8 WESTERN RED CEDAR FASCIA, PAINT TO MATCH EXISTING BUILDING.
6. NEW CERTAINTEED CEMENT BOARD SOFFITS, PAINT TO MATCH EXISTING BUILDING.
7. NEW STEP AND COUNTER FLASHING AROUND CHIMNEY WITH NEW COPPER CHIMNEY CRICKET.
8 .NEW CERTAINTEED LANDMARK TL WEATHERED WOOD SHINGLES.

GENERAL NOTES

A. FIELD VERIFY ALL DIMENSIONS PRIOR TO CONSTRUCTION.
B. INSTALL SHINGLES PER MANUFACTURER'S RECOMMENDATIONS.
C. DOWNSPOUTS SHALL BE EVERY 20'-0" OR PER DNR INSPECTOR'S GIVEN LOCATION. LOCATE DOWNSPOUTS AT LOGICAL LOCATIONS NOT TO INTERFERE WITH WINDOWS OR OTHER ARCHITECTURAL FEATURES.

CONSULTANTS:

IOWA DEPARTMENT OF NATURAL RESOURCES
ENGINEERING SERVICES - WALLACE BUILING
502 E. 9TH ST., DES MOINES, IA 50319-0034
P: 515.281.5918
F: 515.281.8685

LOWER LEVEL REFLECTED CEILING PLAN

ROOF REPLACEMENT FOR:
LACEY KEOSAUQUA LODGE:

22895 LACEY TRAIL, KEOSAUQUA
VAN BUREN COUNTY, IOWA

NO.	BY / DATE	REVISION

DRAWN BY:
PROJECT NUMBER: 12-06-89-03
CHK'D BY:
DATE: 7.24.2013
SHEET No:
A-110

04 ROOF PLAN
SCALE: 3/16" = 1'-0"

03 ROOF PLAN
SCALE: 3/16" = 1'-0"

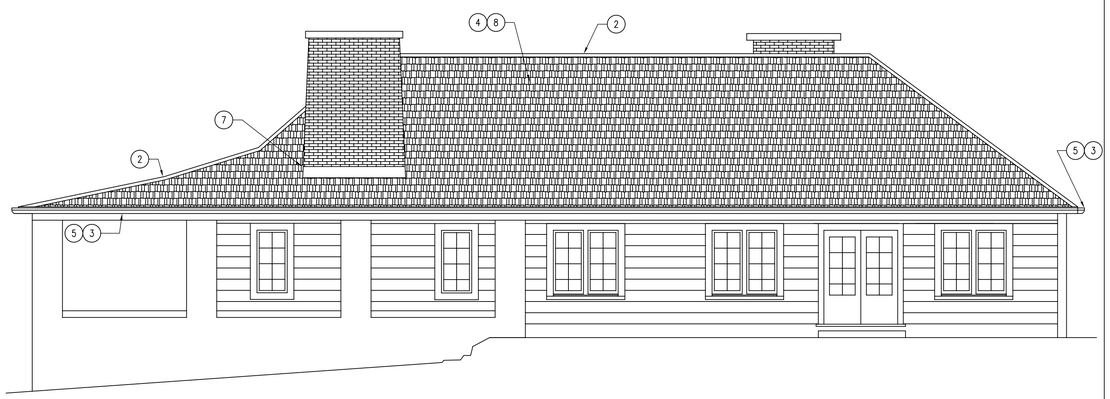

02 ROOF PLAN
SCALE: 3/16" = 1'-0"

01 ROOF PLAN
SCALE: 3/16" = 1'-0"

KEYNOTES

1. 16OZ LEAD COATED COPPER OPEN-VALLEY FLASHING, EXPOSE 3" MINIMUM OF FLASHING EACH SIDE, SEE DETAIL 03/A-110.
2. 16OZ LEAD COATED COPPER RIDGE CAP ON ALL RIDGES, SEE DETAIL 02/A-110.
3. 6" LEAD COATED COPPER HALF-ROUND GUTTERS WITH 4" COPPER DOWNSPOUTS, EXTEND 20'-0" BEYOND BUILDING OF PER DNR INSPECTOR'S INSTRUCTIONS.
4. NEW 3/4" SHEATHING OVER ENTIRE ROOF WITH 30LB FELT WITH WATER & ICE SHEILD 24" FROM EAVES AND RIDGES.
5. NEW 2X8 WESTERN RED CEDAR FASCIA, PAINT TO MATCH EXISTING BUILDING.
6. NEW CERTAINTEED CEMENT BOARD SOFFITS, PAINT TO MATCH EXISTING BUILDING.
7. NEW STEP AND COUNTER FLASHING AROUND CHIMNEY WITH NEW COPPER CHIMNEY CRICKET.
8. NEW CERTAINTEED LANDMARK TL WEATHERED WOOD SHINGLES.

GENERAL NOTES

A. FIELD VERIFY ALL DIMENSIONS PRIOR TO CONSTRUCTION.
B. INSTALL SHINGLES PER MANUFACTURER'S RECOMMENDATIONS.
C. DOWNSPOUTS SHALL BE EVERY 20'-0" OR PER DNR INSPECTOR'S GIVEN LOCATION. LOCATE DOWNSPOUTS AT LOGICAL LOCATIONS NOT TO INTERFERE WITH WINDOWS OR OTHER ARCHITECTURAL FEATURES.

CONSULTANTS:

IOWA DEPARTMENT OF NATURAL RESOURCES
ENGINEERING SERVICES - WALLACE BUILING
502 E. 9TH ST., DES MOINES, IA 50319-0034
P: 515.281.5918
F: 515.281.8685

BUILDING ELEVATIONS

ROOF REPLACEMENT FOR:
LACEY KEOSAUQUA LODGE:

VAN BUREN COUNTY, IOWA

22895 LACEY TRAIL, KEOSAUQUA

NO.	BY / DATE	REVISION

DRAWN BY:
PROJECT NUMBER: 12-06-89-03
CHK'D BY:
DATE: 7.24.2013
SHEET No:
A-111