IOWA DEPARTMENT OF NATURAL RESOURCES

CONSTRUCTION DOCUMENTS FOR PRAIRIE ROSE STATE PARK DREDGE SPOIL CONTAINMENT SITE

SHELBY COUNTY, IOWA

PROJECT # 12-04-83-05

LICENSED PROFESSIONAL ENGINEER
HEATH B. DELZELL
21074
IOWA

I HEREBY CERTIFY THAT THIS ENGINEERING DOCUMENT WAS PREPARED UNDER MY SUPERVISION AND THAT ENGINEERING DECISIONS WITH REGARD TO THE DESIGN WERE MADE BY ME UNDER THE LAWS OF THE STATE OF IOWA.

SIGNATURE DATE

HEATH B. DELZELL
PRINTED OR TYPED NAME

MY LICENCE RENEWAL DATE IS DECEMBER 31, 2013
PAGES COVERED BY THIS SEAL: 1 THRU X

IOWA ONE CALL
1-800-292-8989
www.iowaonecall.com
811 Know what's below. Call before you dig.

DIRECTORY

PROJECT MANAGER		CONSTRUCTION INSPECTOR	
COMPANY	IOWA DEPARTMENT OF NATURAL RESOURCES	COMPANY	IOWA DEPARTMENT OF NATURAL RESOURCES
ADDRESS	502 EAST 9TH STREET	ADDRESS	
CITY,STATE,ZIP	DES MOINES, IA, 50319	CITY,STATE,ZIP	BRAYTON, IA 50042
CONTACT	HEATH DELZELL	CONTACT	MARK JOHNSON
TELEPHONE	515-979-0104	TELEPHONE	515-250-3713
FAX	515-281-8685	FAX	
EMAIL	heath.delzell@dnr.iowa.gov	EMAIL	mark.johnson@dnr.iowa.gov

PROJECT DESCRIPTION

THIS PROJECT CONSISTS OF CONSTRUCTING AN EARTHEN EMBANKMENT FOR FUTURE USE AS A DREDGE SPOIL CONTAINMENT SITE.

AUTHORIZATION TO BID

AUTHORIZATION - PARKS | WILDLIFE | FISHERIES | LAW ENFORCEMENT | FORESTRY DATE

ENGINEERING BUREAU CHIEF DATE

SHEET INDEX

A.01	COVER SHEET
A.02	LOCATION MAP
B.01	FENCE DETAIL
B.02	TYPICAL DETAILS
C.01	QUANTITIES AND GENERAL INFORMATION
D.01	OVERALL PLAN
W.01	CROSS SECTIONS
W.02	CROSS SECTIONS

CONSULTANT:

IOWA DEPARTMENT OF NATURAL RESOURCES
ENGINEERING SERVICES - WALLACE BUILING
502 E. 9TH ST., DES MOINES, IA 50319-0034

COVER SHEET
DREDGE SPOIL CONTAINMENT SITE FOR:
PRAIRIE ROSE STATE PARK
SHELBY COUNTY

NO.	BY DATE	REVISION

DRAWN BY: PROJECT NUMBER: 12-04-83-05
CHK'D BY: DATE: XXX
SHEET No: A.01

Prairie Rose State Park

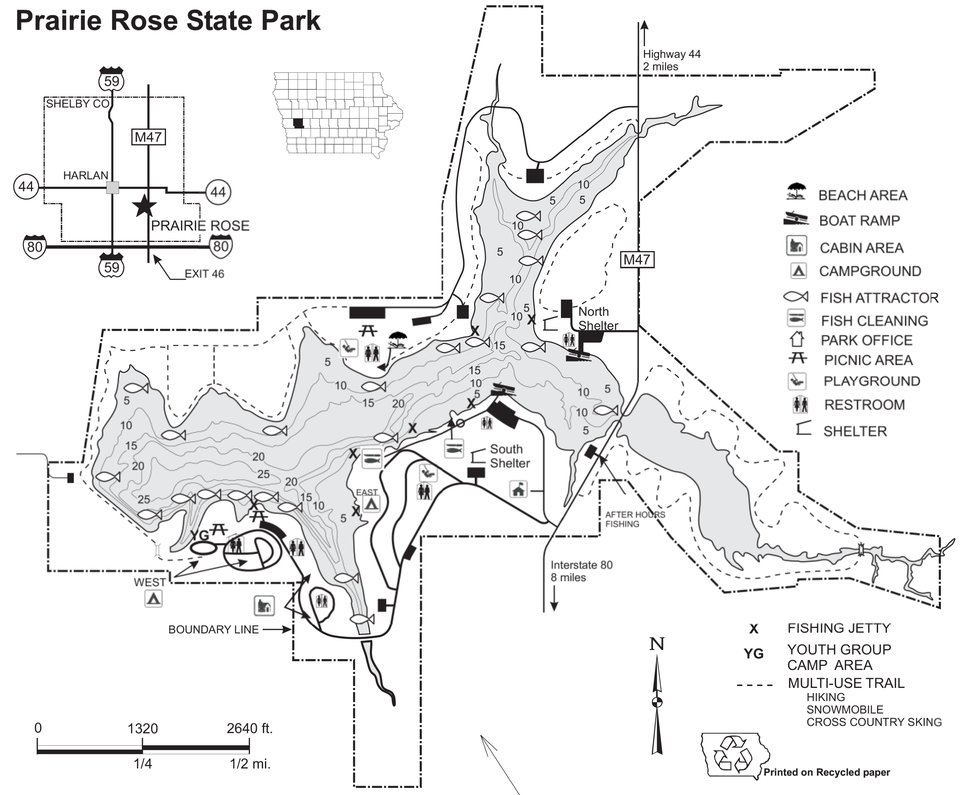

SPOIL SITE

PROJECT LOCATION

CONSULTANT:

IOWA DEPARTMENT OF NATURAL RESOURCES

ENGINEERING SERVICES - WALLACE BUILING
502 E. 9TH ST., DES MOINES, IA 50319-0034

PROJECT LOCATION MAP

DREDGE SPOIL CONTAINMENT SITE FOR:

PRAIRIE ROSE STATE PARK

SHELBY COUNTY

NO.	BY / DATE	REVISION

DRAWN BY: PROJECT NUMBER: 12-04-83-05

CHK'D BY: DATE:

SHEET No: **A.02**

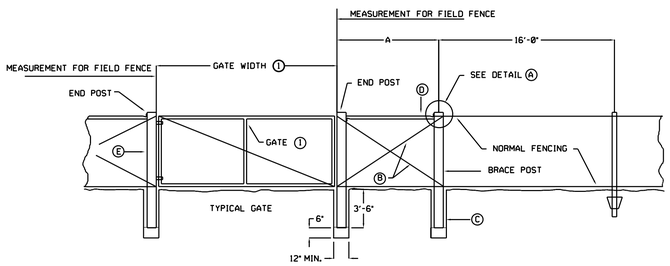

END POST ASSEMBLY

(ONE BRACE)

① UNLESS SPECIFIED OTHERWISE ON DETAIL PLANS, GATES SHALL BE 16 FEET IN WIDTH. DOUBLE GATE AS REQUIRED ONLY FOR WIDTHS MORE THAN 16 FEET. EXACT DETAILS OF GATE DESIGN SHALL BE SUBJECT TO APPROVAL OF THE ENGINEER. INSTALLATION SHALL BE AS RECOMMENDED BY THE MANUFACTURER.

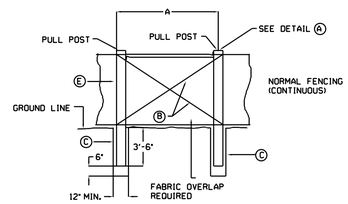

PULL POST ASSEMBLY

WARNING SIGN SIZE TO BE 12" X 18" OR AS APPROVED BY ENGINEER. SIGNS TO BE INCIDENTAL TO FENCE BID ITEM.

WARNING SIGNS TO BE INSTALLED AT 200' INTERVALS AROUND PERIMETER OF SITE. MOUNTED TO FENCE AS APPROVED BY ENGINEER.

LETTERING TO BE SOLID RED IN COLOR, AND 2" HEIGHT, ON A WHITE BACKGROUND

FENCE WARNING SIGN DETAIL

GENERAL NOTES:

CONSTRUCTION OF WOVEN WIRE FIELD FENCING SHALL BE IN CONFORMANCE WITH CURRENT IDOT STANDARD SPECIFICATIONS FOR FENCE MATERIALS AND INSTALLATION. DETAILS SHOWN ON THIS SHEET ARE TYPICAL. ALTERNATE DETAILS MAY BE SUBMITTED TO THE ENGINEER FOR APPROVAL. REFER TO APPROPRIATE OTHER IDOT STANDARD ROAD PLANS FOR ADDITIONAL FENCING REQUIREMENTS. REFER TO PROJECT PLANS FOR DETAILS OF INSTALLATION AND LAYOUT FOR PARTICULAR LOCATIONS.

UNLESS OTHERWISE STATED ON THE PLANS, TYPE 47 FENCE SHALL BE INSTALLED.

CONSTRUCTION OF ALL NECESSARY BRACE AND GATE POST ASSEMBLIES SHALL BE CONSIDERED INCIDENTAL TO THE PRICE BID FOR "FIELD FENCE".

PRICE BID FOR CONTRACT ITEMS SHALL INCLUDE ALL WORK AND MATERIAL NECESSARY TO CONSTRUCT FENCING AS INDICATED HEREON AND AS REQUIRED BY PROJECT PLANS AND SPECIFICATIONS.

CONSTRUCTION AND PLACEMENT OF PROJECT DANGER SIGNS TO BE CONSIDERED INCIDENTAL TO BID ITEM FOR FIELD FENCE.

ONE 16' STEEL PIPE GATE TO BE INCLUDED AS INCIDENTAL TO PRICE BID FOR FENCE CONSTRUCTION. GATE LOCATION TO BE AS APPROVED BY THE ENGINEER.

Ⓐ METAL BRACE PANELS: THE NUMBER OF METAL BRACE PANELS REQUIRED IS DETERMINED BY THE DISTANCE BETWEEN ANY COMBINATION OF "END POST" "GATE POST", "ANGLE POST" OR "PULL POST" ASSEMBLY. FOR THE ABOVE PURPOSE, THE BRACE POST ADJACENT TO "CORNER POST" OR "ANGLE POST" IS CONSIDERED AN "END POST". 165' OR LESS USE 1 METAL BRACE PANEL, OVER 165', USE 2 METAL BRACE PANELS.

Ⓑ BRACE WIRE: 4 STRANDS OF No. 9 WIRE.

Ⓒ DETAILS INDICATE PLACEMENT OF GRANULAR MATERIAL FOR CERTAIN POSTS. POSTS MAY BE DRIVEN IF SATISFACTORY METHOD IS DEMONSTRATED TO THE ENGINEER. GRANULAR MATERIAL NOT REQUIRED FOR DRIVEN POSTS.

Ⓓ METAL BRACE 8' LONG.

Ⓔ WRAP WIRE FABRIC AROUND BRACE POST.

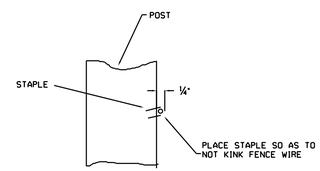

DETAIL STAPLE PLACEMENT

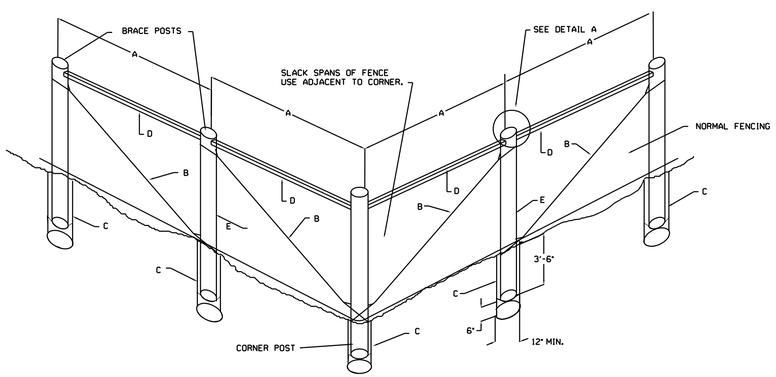

CORNER POST ASSEMBLY

USE WHERE HORIZONTAL ALIGNMENT CHANGES 10° OR MORE

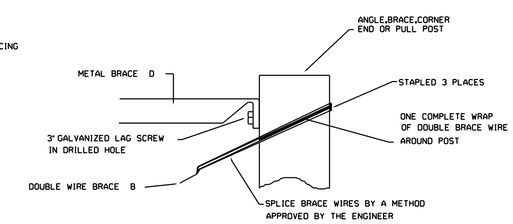

THE TWO BRACE WIRES SHALL BE TWISTED TOGETHER TO PRODUCE PROPER TENSION IN THE BRACE ASSEMBLY.

DETAIL A

BRACE WIRE INSTALLATION

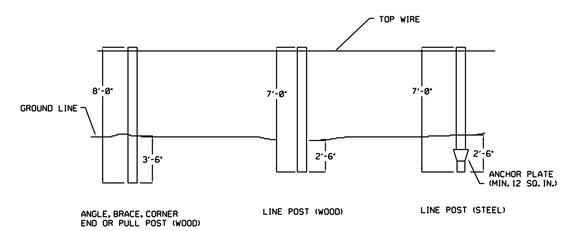

TYPICAL POST INSTALLATION

ALTERNATE DETAILS MAY BE SUBMITTED FOR APPROVAL WHERE ROCK IS ENCOUNTERED

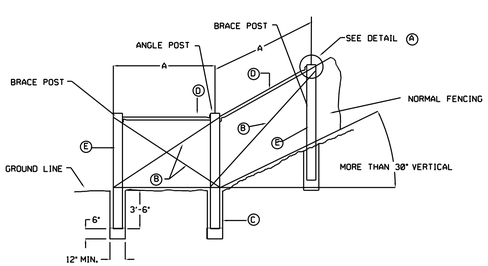

ANGLE POST ASSEMBLY

USE WHERE VERTICAL ALIGNMENT CHANGES 30° OR MORE

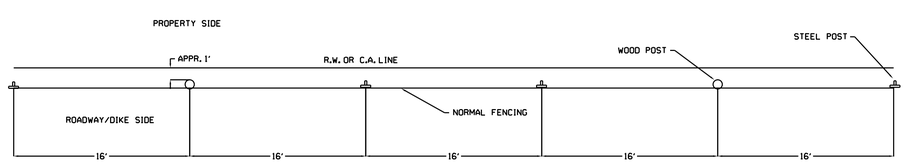

NOTE:
FABRIC SHALL NORMALLY BE PLACED ON ROADWAY/DIKE SIDE OF POSTS. FOR CERTAIN CURVES, STREAM CROSSINGS OR OTHER LOCATIONS SPECIFICALLY DIRECTED BY THE ENGINEER, FABRIC MAY BE PLACED ON THE SIDE OF THE POSTS AWAY FROM THE ROADWAY/DIKE SIDE.

TYPICAL PLAN OF FENCE

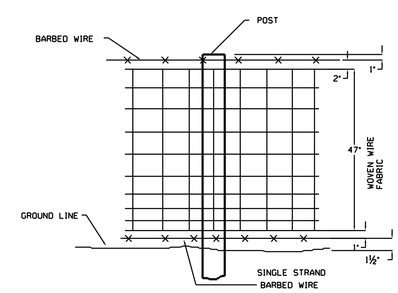

TYPE 47 FENCE

CONSULTANT:

IOWA DEPARTMENT OF NATURAL RESOURCES

ENGINEERING SERVICES - WALLACE BUILING
502 E. 9TH ST., DES MOINES, IA 50319-0034

FENCE DETAILS

DREDGE SPOIL CONTAINMENT SITE FOR:

PRAIRIE ROSE STATE PARK

SHELBY COUNTY

NO.	BY / DATE	REVISION

DRAWN BY:

PROJECT NUMBER: 12-04-83-05

CHK'D BY:

DATE:

SHEET No: B.01

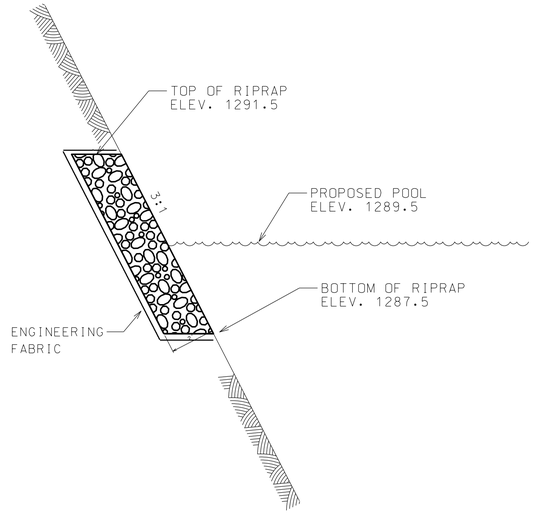

SHORELINE ARMORING DETAIL

NOT TO SCALE

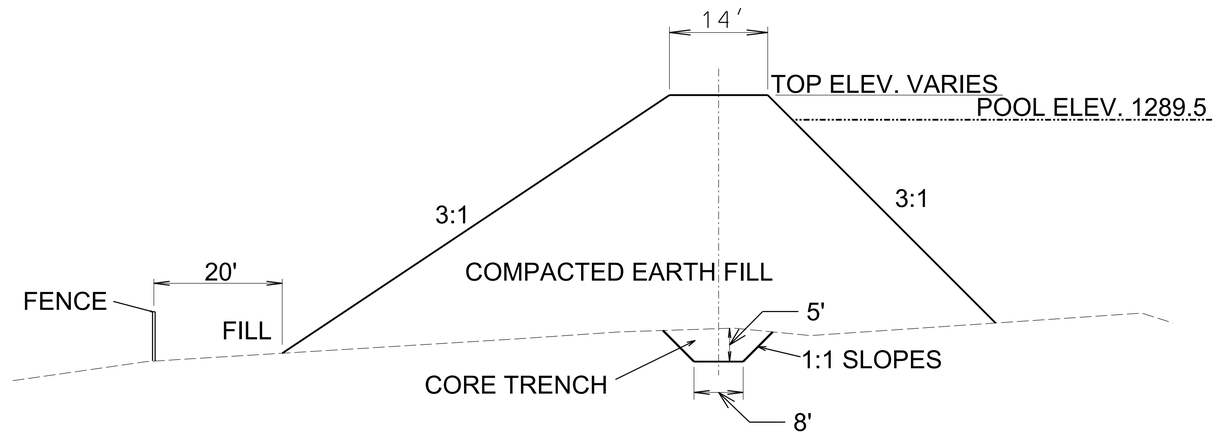

TYPICAL DIKE SECTION

NOT TO SCALE

FILTER DIAPHRAGM

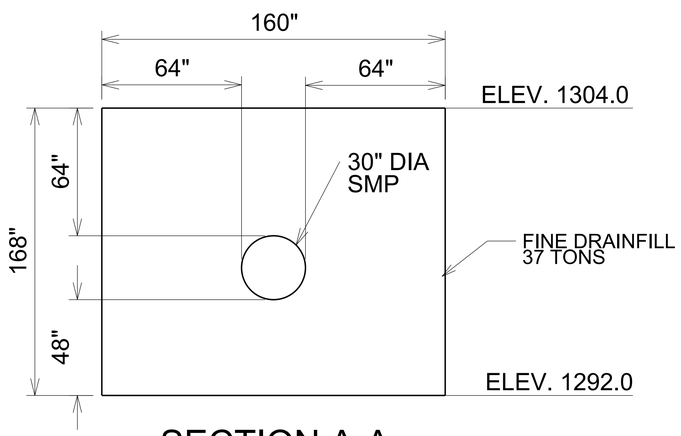

SECTION A-A

PIPE BEDDING

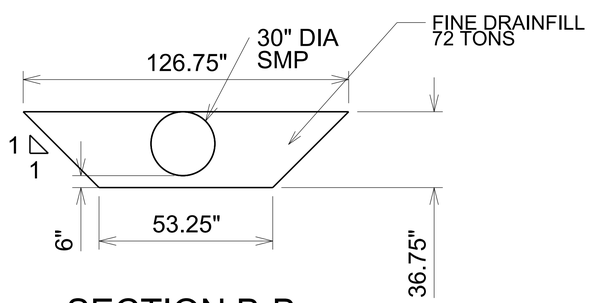

SECTION B-B

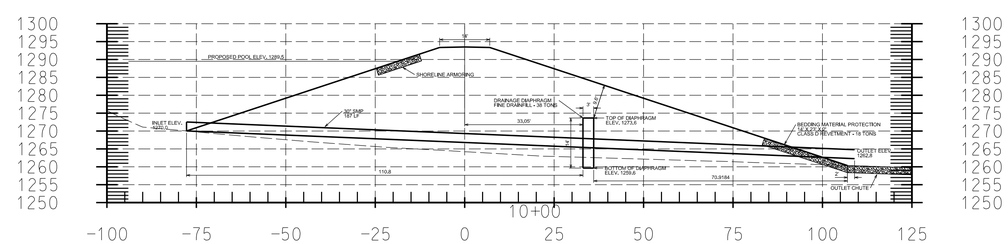

CONDUIT DETAIL

1"=20'

CONSULTANT:

IOWA DEPARTMENT OF NATURAL RESOURCES

ENGINEERING SERVICES - WALLACE BUILING
502 E. 9TH ST., DES MOINES, IA 50319-0034

TYPICAL DETAILS

DREDGE SPOIL CONTAINMENT SITE FOR:

PRAIRIE ROSE STATE PARK

SHELBY COUNTY

NO.	BY / DATE	REVISION

DRAWN BY:

PROJECT NUMBER: 12-04-83-05

CHK'D BY:

DATE:

SHEET No:

B.02

	Description	UNIT	QUANTITY
1	Mobilization	Lump Sum	1
2	Topsoiling	CY	26,538
3	Class 10 Excavation (Core Trench)	CY	4,169
4	Class 10 Excavation (Embankment)	CY	132,700
5	Class 10 Excavation (Waste)	CY	180,000
6	Silt Fence	LF	3,382
7	Field Fence	LF	3,217
8	Seeding and Fertilizing	Acres	6.1
9	Fine Drainfill	Tons	109
10	30" SMP	LF	187
11	30" Apron, Metal	Each	1
12	Class "D" Revetment	Tons	3,650
13	Construction Staking	Lump Sum	1
14	Engineering Fabric	SY	3,633
15	Tile Plugging	Each	3

General Notes
Verify actual locations and elevations with DNR Engineer.

All work shall conform to and be performed in accordance with all applicable codes and ordinances.

The contractor shall visit the site and inspect the project area and thoroughly familiarize themselves with the actual job conditions prior to bidding and the start of work. Failure to visit the project site shall not relieve the contractor from performing the work in accordance to the plans, specification, special provisions and contract.

The contractor shall verify, at the site, all dimensions and conditions shown on the plans and shall notify the DNR Engineer of any discrepancies, omissions, and/or conflicts prior to proceeding with the work.

It shall be the contractor's responsibility to provide waste areas or disposal sites for excess material (excavated material or broken concrete) which is not desirable to be incorporated into the work involved on this project. No payment for overhaul will be allowed for material hauled to these sites. No material shall be placed within the right-of-way, unless specifically stated in the plans or approved by the DNR Engineer.

The contractor shall not disturb desirable grass areas and desirable trees outside the construction limits. The contractor will not be permitted to park or service vehicles and equipment or use these areas for storage of materials. Storage, parking and service areas will be subject to the approval of the DNR Engineer.

Where utilities and fixtures are shown as Existing on the plans or encountered within the construction area, it shall be the responsibility of the contractor to notify the DNR Engineer of those utilities prior to the beginning of any construction. The contractor shall be afforded access to these facilities for necessary modification of services. Underground facilities, structures and utilities have been plotted from available surveys and records and therefore their locations must be considered approximate only. It is possible there may be others, the existence of which is presently not known or shown. It is the contractor's responsibility to determine their existence and exact location and to avoid damage thereto. No claims for additional compensation will be allowed to the contractor for any interference or delay caused by such work.

The contractor shall shape graded area to maintain surface drainage. All elevations are to finish grade.

The contractor is expected to have materials, equipment, and labor available on a daily basis to install and maintain erosion control features on the project. This may involve seeding, silt fence, rock ditch checks, silt basins or silt dikes.

ESTIMATE REFERENCE INFORMATION

ITEM NO.	DESCRIPTION
6	SILT FENCE A. Maintenance and removal is incidental to this bid item.
10	30" SMP A. Used pipe in good condition will be accepted.
12	Class D Revetment A. This material shall meet Iowa DOT requirements for Class D Revetment as specified in the Standard Specifications for Highway and Bridge Construction, Series 2012.

CONSULTANT:

IOWA DEPARTMENT OF NATURAL RESOURCES

ENGINEERING SERVICES - WALLACE BUILING
502 E. 9TH ST., DES MOINES, IA 50319-0034

QUANTITIES AND GENERAL INFORMATION

DREDGE SPOIL CONTAINMENT SITE FOR:

PRAIRIE ROSE STATE PARK

SHELBY COUNTY

NO.	BY / DATE	REVISION

DRAWN BY:

PROJECT NUMBER: 12-04-83-05

CHK'D BY:

DATE:

SHEET No: C.01

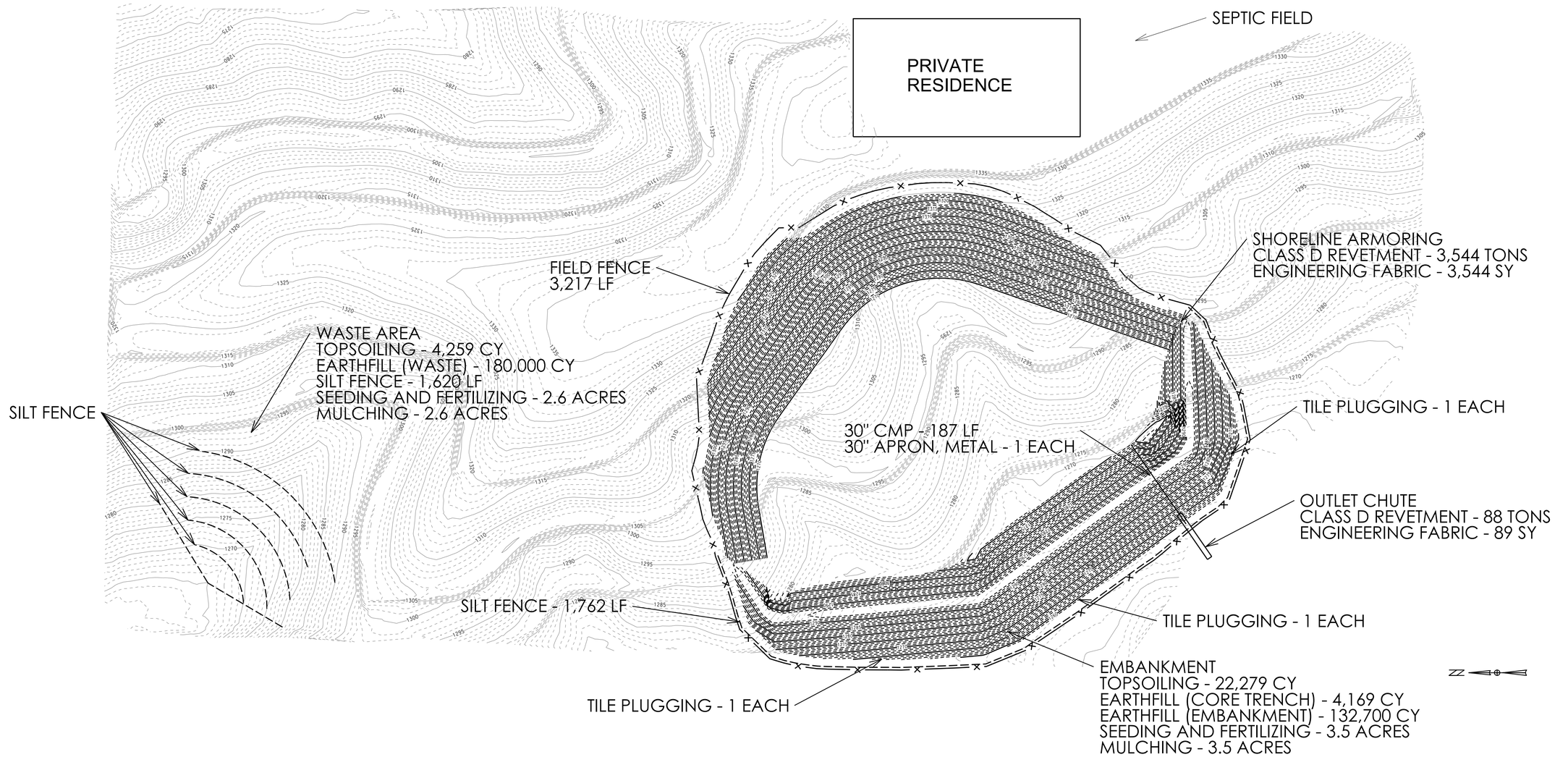

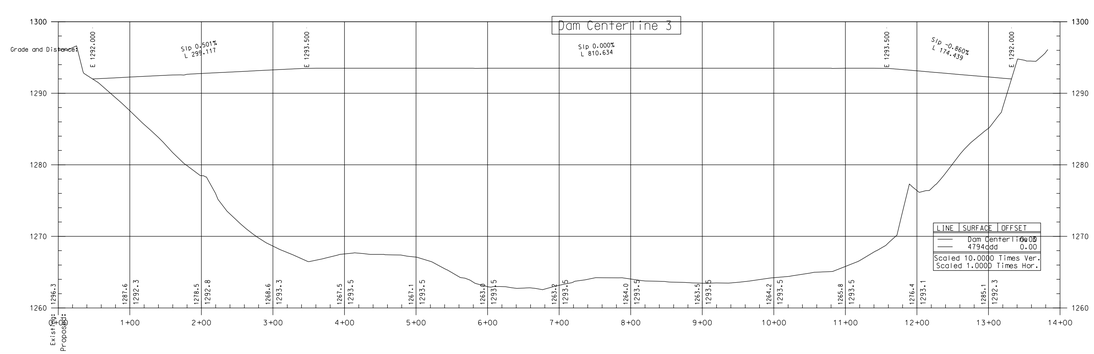

0 FEET 100

CONSULTANT:

IOWA DEPARTMENT OF NATURAL RESOURCES

ENGINEERING SERVICES - WALLACE BUILING
502 E. 9TH ST., DES MOINES, IA 50319-0034

OVERALL PLAN

DREDGE SPOIL CONTAINMENT SITE FOR:

PRAIRIE ROSE STATE PARK

SHELBY COUNTY

NO.	BY / DATE	REVISION

DRAWN BY:

PROJECT NUMBER: 12-04-83-05

CHK'D BY:

DATE:

SHEET No:

D.01

CONSULTANT:

IOWA DEPARTMENT OF NATURAL RESOURCES

ENGINEERING SERVICES - WALLACE BUILING
502 E. 9TH ST., DES MOINES, IA 50319-0034

CROSS SECTIONS

DREDGE SPOIL CONTAINMENT SITE FOR:

PRAIRIE ROSE STATE PARK

SHELBY COUNTY

NO.	BY / DATE	REVISION

DRAWN BY: PROJECT NUMBER: 12-04-83-05

CHK'D BY: DATE:

SHEET No: **W.01**

CONSULTANT:

IOWA DEPARTMENT OF NATURAL RESOURCES

ENGINEERING SERVICES - WALLACE BUILING
502 E. 9TH ST., DES MOINES, IA 50319-0034

CROSS SECTIONS

DREDGE SPOIL CONTAINMENT SITE FOR:

PRAIRIE ROSE STATE PARK

SHELBY COUNTY

NO.	BY / DATE	REVISION

DRAWN BY: PROJECT NUMBER: 12-04-83-05

CHK'D BY: DATE:

SHEET No: **W.02**