IOWA DEPARTMENT OF NATURAL RESOURCES

CONSTRUCTION DOCUMENTS FOR COLYN WMA RATHBUN HQ ADDITION LUCAS COUNTY, IOWA

PROJECT # 13-05-59-01

IOWA ONE CALL
800/292-8989
TOLL FREE
CALL - BEFORE - YOU DIG

PLANS PREPARED BY
ENGINEERING BUREAU
MANAGEMENT SERVICES DIVISION

REGISTERED PROFESSIONAL ARCHITECT
RYAN E. RICHEY
06461
IOWA

I hereby certify that this architectural document was prepared by me or under my direct personal supervision and that I am a duly Registered Professional Architect under the laws of the State of Iowa.

RYAN E. RICHEY DATE

My license renewal date is June 30, 2015.

Pages or sheets covered by this seal:

A-001 - A-600

LICENSED PROFESSIONAL ENGINEER
GABRIEL LEE
12882
IOWA

I hereby certify that this engineering document was prepared by me or under my direct personal supervision and that I am a duly LICENSED Professional ENGINEER under the laws of the State of Iowa.

GABRIEL LEE DATE

My license renewal date is DECEMBER 31, 2013.

Pages or sheets covered by this seal:

C1 - C3

LICENSED PROFESSIONAL ENGINEER
CHAD D. BASS
21397
IOWA

I hereby certify that this engineering document was prepared by me or under my direct personal supervision and that I am a duly LICENSED Professional ENGINEER under the laws of the State of Iowa.

CHAD D. BASS DATE

My license renewal date is DECEMBER 31, 2013.

Pages or sheets covered by this seal:

M0.0 - P2.0

LICENSED PROFESSIONAL ENGINEER
JAMES R. DEEDS IV
17588
IOWA

I hereby certify that this engineering document was prepared by me or under my direct personal supervision and that I am a duly LICENSED Professional ENGINEER under the laws of the State of Iowa.

JAMES R. DEEDS IV DATE

My license renewal date is DECEMBER 31, 2014.

Pages or sheets covered by this seal:

E0.0 - E1.0

SHEET INDEX

SHEET. NO.	SHEET TITLE
	ARCHITECTURAL
A-001	COVER SHEET
A-002	WALL TYPES, NOTES, SYMBOLS AND DEMO FLOOR PLAN
A-003	PROJECT LOCATION
	CIVIL
C1	OVERALL SITE PLAN
C2	DEMOLITION PLAN
C3	SITE PLAN
	ARCHITECTURAL
A-011	DEMOLITION PLAN
A-012	DEMOLITION ELEVATIONS
A-020	LIFE SAFETY PLAN
A-100	REFERENCE FLOOR PLANS
A-101	DIMENSION FLOOR PLAN
A-110	REFLECTED CEILING PLAN
A-200	BUILDING ELEVATIONS
A-300	BUILDING SECTIONS
A-600	FINISH, DOOR & WINDOW SCHEDULES
	MECHANICAL
MD1.0	MECHANICAL DEMO FLOOR PLAN
M1.0	MECHANICAL FLOOR PLAN
	ELECTRICAL
E1.0	ELECTRICAL FLOOR PLAN

DIRECTORY

OWNER		DNR INSPECTOR	
COMPANY	IOWA DEPARTMENT OF NATURAL RESOURCES	COMPANY	IOWA DEPARTMENT OF NATURAL RESOURCES
ADDRESS	502 E. 9TH. ST.	ADDRESS	-
CITY,STATE,ZIP	DES MOINES, IA 50319	CITY,STATE,ZIP	INDIANOLA, IA
CONTACT	N/A	CONTACT	JASON KRUSE
TELEPHONE	515.281.5918	TELEPHONE	515.250.3707
FAX	515.281.6794	FAX	515.281.8685
EMAIL	N/A	EMAIL	JASON.KRUSE@DNR.IOWA.GOV
ARCHITECT		**CIVIL**	
COMPANY	IOWA DEPARTMENT OF NATURAL RESOURCES	COMPANY	IOWA DEPARTMENT OF NATURAL RESOURCES
ADDRESS	502 E. 9TH. ST.	ADDRESS	502 E. 9TH. ST.
CITY,STATE,ZIP	DES MOINES, IA 50319	CITY,STATE,ZIP	DES MOINES, IA 50319
CONTACT	RYAN RICHEY	CONTACT	GABE LEE
TELEPHONE	515.979.0107	TELEPHONE	515.494.8647
FAX	515.281.8685	FAX	515.281.8685
EMAIL	RYAN.RICHEY@DNR.IOWA.GOV	EMAIL	GABE.LEE@DNR.IOWA.GOV
ELECTRICAL ENGINEER		**MECHANICAL ENGINEER**	
COMPANY	KCL ENGINEERING	COMPANY	KCL ENGINEERING
ADDRESS	2829 WESTOWN PARKWAY	ADDRESS	2829 WESTOWN PARKWAY
CITY,STATE,ZIP	WEST DES MOINES, IA 50226	CITY,STATE,ZIP	WEST DES MOINES, IA 50226
CONTACT	JAMES DEEDS	CONTACT	CHAD BASS
TELEPHONE	515.371.9970	TELEPHONE	515.205.1397
FAX	-	FAX	-
EMAIL	JDEEDS@KCLENGINEERING.COM	EMAIL	CBASS@KCLENGINEERING.COM
COMPANY	-	COMPANY	-
ADDRESS	-	ADDRESS	-
CITY,STATE,ZIP	-	CITY,STATE,ZIP	-
CONTACT	-	CONTACT	-
TELEPHONE	-	TELEPHONE	-
FAX	-	FAX	-
EMAIL	-	EMAIL	-

PROJECT DATA

OCCUPANT LOAD:
PROPOSED AREA OF IMPROVEMENT
GROUP S-1 - STORAGE
STORAGE AREAS - 960 GROSS (I.B.C. TABLE 1004.1.1)
900 S.F. / 300 = 3 = 3 OCCUPANTS

EXISTING BUILDING
GROUP S-1 STORAGE - 2,250 S.F.

TOTAL OCCUPANT LOAD = 11 OCCUPANTS

BUILDING DATA

MEANS OF EGRESS:

MIN. REQ'D # OF EXITS = 2 EXITS PER LEVEL (IBC TABLE 1021.1)
MAX TRAVEL DISTANCE = 200' (IBC 1016.1)
DEAD-END CORRIDOR = 20' MAX. (IBC 1018.4)
MIN. CORRIDOR WIDTH = 36" CLEAR
MIN. CLEAR OPENINGS FOR EXIT DOORS = 32" (ACTUAL 34")

FIRE EXTINGUISHERS:
THE NUMBER AND LOCATIONS OF FIRE EXTINGUISHERS TO BE DETERMINED BY THE FIRE MARSHAL PRIOR TO CERTIFICATE OF OCCUPANCY.

BUILDING:

ADDRESS: COLYN WMA
28248 415TH STREET
RUSSELL, IA 50238
USE - OFFICE / SHOP
BUILDING CONSTRUCTION - TYPE V-B
W/OUT AUTOMATIC SPRINKLER SYSTEM
NUMBER OF STORIES - 1 STORIES
BUILDING HEIGHT - 16'-0"
BUILDING ADDITION AREA - 960 GSF
BUILDING OCCUPANCY - GROUP S-1

BUILDING CODES

BUILDING CODE - 2009 INTERNATIONAL BUILDING CODE

STRUCTURAL CODE -2009 INTERNATIONAL BUILDING CODE

PLUMBING CODE - 2009 INTERNATIONAL BUILDING CODE

MECHANICAL CODE - 2009 INTERNATIONAL BUILDING CODE

ELECTRICAL CODE - 2009 INTERNATIONAL BUILDING CODE

FIRE PREVENTION CODE - 2009 INTERNATIONAL FIRE PREVENTION CODE

ACCESSIBILITY CODE - 2009 INTERNATIONAL BUILDING CODE, CHAPTER 11

ENERGY CODE - 2009 INTERNATIONAL ENERGY EFFICIENCY CODE

PROJECT DESCRIPTION

RATHBURN WILDLIFE HEADQUARTERS IS LOCATED AT THE COLYN WMA, NEAR THE TOWN OF LUCAS IN LUCAS COUNTY, IA. THIS PROJECT CONSISTS OF THE CONSTRUCTION OF A ONE STORY, PRE-ENGINEERED S.I.P.'S (STRUCTURAL INSULATED PANEL) BUILDING ADDITION WITH A METAL ROOF AND METAL SIDING, APPROXIMATELY 24'-0"X40'-0", INCLUDING ONE HEATED BAY WITH AN OVERHEAD DOOR, EGRESS DOOR AND A TOOL STORAGE CLOSET. PROJECT NUMBER 13-05-59-01

AUTHORIZATION TO BID

AUTHORIZATION - PARKS | WILDLIFE | FISHERIES | LAW ENFORCEMENT | FORESTRY DATE

ENGINEERING BUREAU CHIEF DATE

BID ITEMS

ITEM NUMBER	DESCRIPTION	ESTIMATED QUANTITY
1	4" PVC SDR 23.5	20 LF
2	30" PRECAST CONCRETE SPLASH BLOCKS	1 EACH
3	4" RAT GUARD (AGRI-DRAIN RG04, OR EQUAL)	1 EACH
4	1" PE WATER LINE	32 LF
5	YARD HYDRANT (WOODFORD MODEL S-3, OR EQUAL)	1 EACH
6	6" REINFORCED PCC	64 YARDS
7	8" FILTER SOCK	LUMP SUM
8	LP TANK (PER LOCAL LP SUPPLIER RECOMMENDATIONS) 5" CONCRETE PAD, 5'-0" X 10'-0" AND LP SUPPLY LINE TO BUILDING ADDITION	LUMP SUM
9	GRADING	LUMP SUM
10	PAD GRANULAR BASE	LUMP SUM
11	SEEDING	LUMP SUM
12	CONSTRUCTION STAKING	LUMP SUM
13	BUILDING AND ALL ASSOCIATED EQUIPMENT (ARCHITECTURAL, MECHANICAL & ELECTRICAL)	LUMP SUM

CONSULTANTS:

IOWA DEPARTMENT OF NATURAL RESOURCES
ENGINEERING SERVICES - WALLACE BUILING
502 E. 9TH ST., DES MOINES, IA 50319-0034
P: 515.281.5918
F: 515.281.8685

COVER SHEET

SHOP ADDITION FOR:
COLYN WMA

LUCAS COUNTY, IOWA

28248 415TH ST., RUSSELL

NO.	BY / DATE	REVISION

DRAWN BY:
PROJECT NUMBER: 13-05-59-01
CHK'D BY:
DATE: 05.29.2013
SHEET No:

A-001

DIMENSION NOTES

1. IN INTERIOR SPACES THE ACTUAL DIMENSIONS MAY BE LESS IMPORTANT THAN IF AT TWO ELEMENTS IN THE BUILDING WERE TO BE EQUAL. IN THESE CASES, THE WORD "EQUAL OR EQ" IS USED IN LIEU OF THE ACTUAL DIMENSIONS.
2. WHEN A ROOM CENTERLINE IS INDICATED ONLY ONE SIDE OF THE ROOMS ELEMENTS MAY BE DIMENSIONED.
3. COLUMN IDENTIFICATION: DETAILS WILL GOVERN ALL DIMENSIONS AND NO DIMENSIONS WILL BE SHOWN ON SMALL SCALE PLANS.
4. PARTITION CENTERED ON COLUMN OR GRID LINES WILL NOT BE DIMENSIONED ON SMALL SCALE PLANS.
5. PARTITION WITH A FINISHED FACE FLUSH WITH FINISH FACE OF COLUMN WILL NOT be DIMENSIONED ON SMALL SCALE PLANS.
6. PARTITION FINISH FACE ON COLUMN OR GRID LINE WILL NOT BE DIMENSIONED ON SMALL SCALE PLANS .
7. WHEN ONE JAMB OCCURS AT A COLUMN OR GRID LINE NO DIMENSIONS WILL BE SHOWN ON THE SMALL SCALE PLANS. THE OPENING WIDTH WILL BE GOVERNED BY CRITERIA OR SCHEDULES.
8. WHEN NEITHER JAMB OCCURS AT A COLUMN OR GRID LINE ONE JAMB WILL BE DIMENSIONED.
9. DOOR LOCATIONS ARE TO BE LOCATED BY ONE OF FOLLOWING:
   a. ONE JAMB FACE LOCATED BY A PARTITION AT RIGHT ANGLE. 4"TYPICAL UNLESS INDICATED ON PLAN.
   b. OR AS DIMENSIONED ON PLAN.
10. PARTITIONS ARE DIMENSIONED TO FACE OF CMU OR FACE OF STUD UNLESS OTHERWISE NOTED.
11. DIMENSIONS ARE INDICATED IN THE DOCUMENTS. THE DRAWINGS SHALL NOT BE SCALED FOR DIMENSIONS.

MATERIAL LEGEND

EARTH
COMPACTED EARTH
GRASS
GRAVEL
clay
fence
turf block
pavers
CONCRETE MASONRY UNIT
metal stud
PARTICLE BOARD
PLYWOOD
BATT INSULATION
ACOUSTICAL CEILING TILE
plastic
carpet
GYPSUM / STUCCO
grout
sand
foam INSULATION
RIGID INSULATION
ALUMINUM
STEEL
FINISHED WOOD
brick
CONCRETE
ASPHALT
cast stone
stone
glass
WOOD BLOCKING
CONTINUOUS WOOd

SYMBOL LEGEND

NORTH AAROW

00 TITLE
SCALE: 0 = 0'-0"
DRAWING / DETAIL IDENTIFICATION

00 / A-000
SECTION REFERENCE

00 / A-000
DETAIL REFERENCE

00 / A-000
EXTERIOR ELEVATION

00/A-100
INTERIOR ELEVATION

ELEVATION : 0'-0"
DESCRIPTION1
ELEVATION TARGET

1 / A
COLUMN GRID

00 / A-000
00 / A-000
MATCH LINES

ROOM 000
ROOM/SPACE IDENTIFICATION

100
DOOR TAG

00
WINDOW TAG

00
WALL TYPE REFERENCE
KEYNOTE NUMBER -NEW
C.S.I. DIVISION/KEY

00
KEYNOTE – DEMOLITION

00
KEYNOTE – NEW/RENOVATION

00
KEYNOTE – FINISH/ACCESSORY

PROPERTY LINE REFERENCE

CENTER LINE REFERENCE

0"
LEVEL CHANGE REFERENCE

DETAIL CUT LINE

1
REVISION NUMBER AND CLOUD

GENERAL NOTES

THE FOLLOWING GENERAL NOTES SHALL PERTAIN TO THE ENTIRE SET OF CONTRACT DOCUMENTS

1. A GENERAL CONTRACTOR SHALL NOTE THAT THE ARCHITECTURAL DRAWINGS ARE ESTABLISHING A MINIMUM MATERIAL OR CONSTRUCTION METHOD STANDARD. THE GENERAL CONTRACTOR SHALL PROVIDE A BID PRICE BASED ON THE SPECIFIC MATERIALS NOTED.
2. DO NOT SCALE DRAWINGS. IF DIMENSIONS ARE IN QUESTION, THE CONTRACTOR SHALL BE RESPONSIBLE FOR OBTAINING CLARIFICATION FROM THE ARCHITECT BEFORE CONTINUING WITH CONSTRUCTION.
3. GENERAL CONTRACTOR AND SUBCONTRACTORS SHALL PERFORM THEIR WORK IN ACCORDANCE WITH ALL APPLICABLE CODES GOVERNING EACH TRADE.
4. THE CONTRACTOR SHALL MAINTAIN A CLEAN AND ORGANIZED JOB SITE, ACCEPTABLE TO THE OWNER.
5. THE CONTRACTOR SHALL COORDINATE THE SEQUENCE OF WORK WITH THE OWNER REPRESENTATIVE..
6. THERE SHALL BE NO DEVIATION BY THE GENERAL CONTRACTOR FROM THE CONSTRUCTION DOCUMENTS UNLESS APPROVED IN WRITING BY THE ARCHITECT.
7. EACH CONTRACTOR SHALL VERIFY EXISTING CONDITIONS IN THE FIELD PRIOR TO THE INITIATION OF WORK AND SHALL NOTIFY THE ARCHITECT OF ANY DISCREPANCIES OR CONDITIONS INTERFERING WITH THE ABILITY OF THE CONTRACTOR TO COMPLETE WORK AS OUTLINED ON THE CONSTRUCTION DRAWINGS.
8. ALL CONTRACTORS ARE REQUIRED TO COORDINATE THEIR WORK WITH OTHER TRADES. LACK OF THIS COORDINATION RESULTING IN ADDED COST TO THE CONTRACT WILL BE BORNE BY THE CONTRACTOR.
9. GENERAL CONTRACTOR SHALL BE RESPONSIBLE FOR KEEPING THE EXISTING BUILDING WATER TIGHT DURING CONSTRUCTION.
10. THE CONTRACTOR WILL VERIFY THAT EXIT EGRESS IS MAINTAINED FOR ALL OCCUPIED AREAS OF THE BUILDING THROUGHOUT ALL PHASES OF CONSTRUCTION.
11. PLAN DIMENSIONS ARE GIVEN TO FACE OF STUD OR BLOCK WALL. "CLEAR" DIMENSIONS ARE GIVEN TO THE FACE
12. THE OWNER WILL ASSUME ALL LIABILITY AND SHALL TAKE PERSONAL RESPONSIBILITY FOR ANY DECISIONS THAT THEY MAKE TO CHANGE OR ALTER THE CONSTRUCTION DOCUMENTS WITHOUT THE ARCHITECT'S WRITTEN APPROVAL.
13. PROTECT ALL EXISTING FINISHES AND MATERIALS TO REMAIN, IN ACCORDANCE WITH ACCEPTABLE TRADE PRACTICES, MANUFACTURER, RECOMMENDATIONS, OR AS DIRECTED BY THE ARCHITECT.
14. CUTTING OF EXISTING CONSTRUCTION FOR THE INSTALLATION OF ALL NEW WORK BY ALL TRADES, AND THE SUBSEQUENT PATCHING THEREOF, SHALL BE THE RESPONSIBILITY OF THE GENERAL CONTRACTOR, WHETHER THE WORK IS DONE BY HIS OWN FORCES OR NOT. GRINDING OF MATERIALS FOR REMOVAL SHALL NOT BE PERMITTED. CUTTING SHALL BE TO STRAIGHT LINE. UNWORKMAN-LIKE CUTTING, DAMAGE RESULTING THEREFROM AND UNACCEPTABLE PATCHING SHALL BE REPAIRED AND/OR REPLACED TO AN ACCEPTABLE CONDITION APPROVED BY THE ARCHITECT. A OWNER PROJECT REPRESENTATIVE SHALL BE NOTIFIED PRIOR TO CUTTING OF ANY STRUCTURAL ITEM (I.E. CONCRETE FLOOR, MASONRY, WALL, ETC.) WITHIN THE EXISTING BUILDING. METHOD OF CUTTING SHALL BE APPROVED BY THE OWNER PROJECT REPRESENTATIVE.
15. PATCHING MATERIAL SHALL MATCH EXISTING ADJACENT MATERIALS AS CLOSELY AS POSSIBLE IN COLOR, PATTERNS, AND/OR TEXTURES.
16. ALL SALVAGE MATERIALS REMOVED SHALL REMAIN THE PROPERTY OF THE OWNER. ALL NON-SALVAGE CONSTRUCTION MATERIALS AND DEBRIS FROM DEMOLITION WORK SHALL BE REMOVED FROM THE SITE AS WORK PROGRESSES, UNLESS OTHERWISE NOTED.
17. ISOLATE ALL DISSIMILAR METALS. G SHALL REQUEST APPROVAL BY THE ARCHITECT FOR MATERIALS USED FOR THIS PURPOSE, PRIOR TO INSTALLATION.
18. SEALANTS SHALL BE COMPATIBLE WITH ADJACENT SURFACE(S) THAT ARE IN CONTACT. REFER TO SPECIFICATIONS FOR APPROVED MANUFACTURERS AND PROCEDURES.
19. CAULK JOINTS OF DISSIMILAR EXPOSED TO VIEW MATERIALS AS REQUIRED BY THE ARCHITECT.
20. ALL DOOR HARDWARE TO BE FL. ADA COMPLIANT.
21. ALL EXTERIOR WALLS, DOORS AND WINDOWS ARE EXISTING U.N.O.
22. ALL FINISHES TO BE PER CLASS INDICATED ON A-004
23. NO CONSTRUCTION SHALL OCCUR WITHOUT SHOP DRAWING APPROVAL. SHOP DRAWINGS TO BE PROVIDED TO ARCHITECT FOR REVIEW UPON BEING REVIEWED AND SIGNED/DATED BY THE GENERAL CONTRACTOR AND SHALL INCLUDE BUT NOT BE LIMITED TO THE FOLLOWING ITEMS:
   - CABINETRY MILLWORK
   - RUNNING TRIM AND CASING PROFILES
   - PAINT/LAMINATE COLOR SAMPLES
   - ACOUSTICAL CEILING AND GRID
   - TOILET ACCESSORIES
   - KITCHEN EQUIPMENT
   - ROOF PENETRATIONS
   - HVAC EQUIPMENT
   - PLUMBING EQUIPMENT AND FIXTURES
   - ELECTRICAL EQUIPMENT AND FIXTURES
24. PRIOR TO COMMENCING WORK, THE CONTRACTOR SHALL SUBMIT (2) COPIES OF MATERIAL SAFETY DATA SHEETS (MSDS) FOR ALL PRODUCTS USED TO PERFORM THE WORK.

ABBREVIATIONS

ABV	ABOVE
AFF	ABOVE FINISH FLOOR
ACT	ACOUSTICAL CEILING TILE
AHU	AIR HANDLER UNIT
AL	ALUMINUM
AB	ANCHOR BOLT
@	AT
BM	BEAM
BRG	BEARING
BLK	BLOCK
BD	BOARD
BTM	BOTTOM
BLDG	BUILDING
BUR	BUILT-UP ROOF
CAB	CABINET
CPT	CARPET
CF	CEILING FINISH
CIP	CAST IN PLACE
CLG	CEILING
CL	CENTER LINE
CT	CERAMIC TILE
CLR	CLEAR
COL	COLUMN
CONC	CONCRETE
CMU	CONCRETE MASONRY UNIT
CONT	CONTINUOUS
CJ	CONTROL JOINT
DIA	DIAMETER
DEMO	DEMOLITION
DR	DOOR
DN	DOWN
DS	DOWNSPOUT
DWG	DRAWINGS
ELEC	ELECTRICAL
EWC	ELECTRIC WATER COOLER
ELEV	ELEVATION
EQ	EQUAL
EXIST	EXISTING
EJ	EXPANSION JOINT
EXT	EXTERIOR
FIN	FINISH
FV	FIELD VERIFY
FE	FIRE EXTINGUISHER
FLR	FLOOR
FD	FLOOR DRAIN
FTG	FOOTING
FR	FIRE RETARDANT
GA	GAUGE
GC	GENERAL CONTRACTOR
GALV	GALVANIZED
GFI	GROUND FAULT INTERRUPT
GYP	GYPSUM
HC	HANDICAPPED
HDW	HARDWARE
HT	HEIGHT
HDR	HEADER
HM	HOLLOW METAL
IC	INSTALLED BY CONTRACTOR
IO	INSTALLED BY OWNER
INSUL	INSULATION
INT	INTERIOR
JAN	JANITOR
JT	JOINT
LAM	LAMINATED
LF	LINEAR FEET
MANUF	MANUFACTURER
MAX	MAXIMUM
MO	MASONRY OPENING
MECH	MECHANICAL
MEMB	MEMBRANE
MTL	METAL
MIN	MINIMUM
N/A	NOT APPLICABLE
NIC	NOT IN CONTRACT
NTS	NOT TO SCALE
#, NO	NUMBER
OA	OVERALL
OC	ON CENTER
OCC	OCCUPANCY
OPNG	OPENING
OPP	OPPOSITE
OH	OVERHANG
PAV	PAVERS
PNT	PAINTED
PR	PAIR
PBO	PURCHASED BY OWNER
PF	PRE-FINISHED/PRIMED
PL	PLATE
PLMB	PLUMBING
PLYWD	PLYWOOD
PT	PRESSURE TREATED
POR	POINT OF REFERENCE
QT	QUARRY TILE
R	RADIUS
RCP	REFLECTED CEILING PLAN
REINF	REINFORCED
RENO	RENOVATION
REQ'D	REQUIRED
RD	ROOF DRAIN
RM	ROOM
RO	ROUGH OPENING
S	STAIN
SECT	SECTION
SIM	SIMILAR
SC	SOLID CORE
ST	STUCCO
SPEC	SPECIFICATION
SF	SQUARE FOOT
SS	STAINLESS STEEL
STL	STEEL
STRUCT	STRUCTURAL
STD	STANDARD
TR	TRUSS
TG	TEMPERED GLASS
TEXT	TEXTURED
TYP	TYPICAL
T&G	TONGUE & GROOVE
T&B	TOP & BOTTOM
UL	UNDERWRITERS LAB
UNO	UNLESS NOTED OTHERWISE
VP	VAPOR BARRIER
VB	VINYL BASE
VCT	VINYL COMPOSITION-TILE
VWC	VINYL WALL COVERING
WC	WATER COOLER
WH	WATER HEATER
WWF	WELDED WIRE FABRIC
WD	WOOD
W/	WITH
W/O	WITHOUT

WALLTYPES

08 NOT USED

07 NOT USED

06 NOT USED

05 NOT USED

WALLTYPES

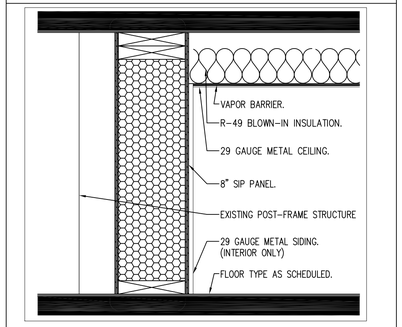

04 NON-RATED/BEARING
8" INTERIOR SIP PANEL, POST-FRAME STRUCTURE ADJACENT

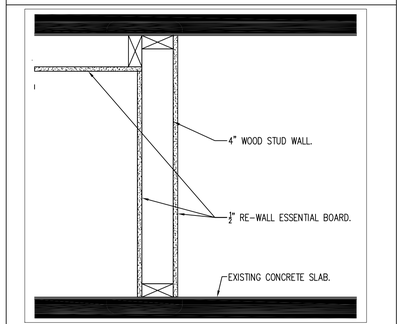

03 NON-RATED/NON-BEARING
4" WD STUD WALL W/ 1/2" RE-WALL ESSENTIAL BOARD

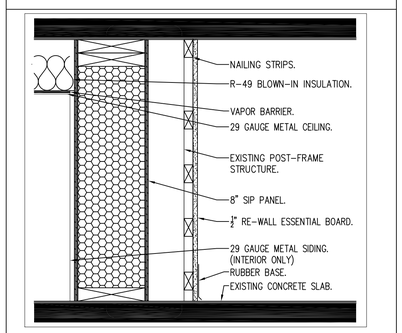

02 NON-RATED/BEARING
8" INTERIOR SIP PANEL W/ 29 GAUGE MTL. SIDING

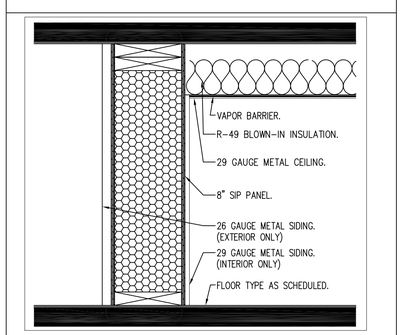

01 NON-RATED/BEARING
8" EXTERIOR SIP PANEL W/ 26 GAUGE EXTERIOR MTL. SIDING.

CONSULTANT:

IOWA DEPARTMENT OF NATURAL RESOURCES
ENGINEERING SERVICES - WALLACE BUILING
502 E. 9TH ST., DES MOINES, IA 50319-0034
P: 515.281.5918
F: 515.281.8685

WALL TYPES, NOTES & SYMBOLS

SHOP ADDITION FOR:
COLYN WMA

LUCAS COUNTY, IOWA

28248 415TH ST., RUSSELL

NO.	BY	DATE	REVISION

DRAWN BY: JL
PROJECT NUMBER: 13-05-59-01
CHK'D BY: RR
DATE: 05.29.2013
SHEET No: A-002

LOCATION MAP

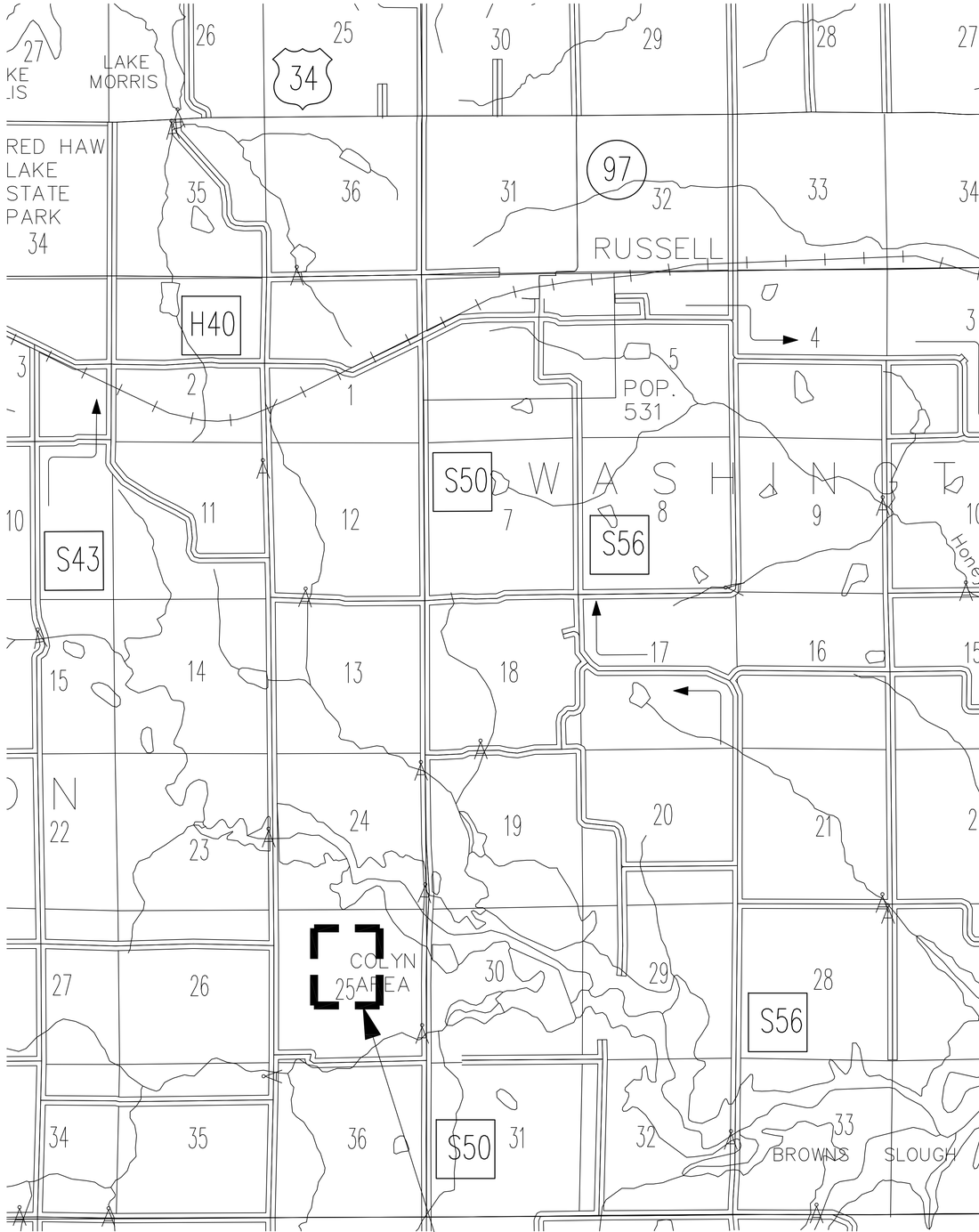

VICINITY MAP

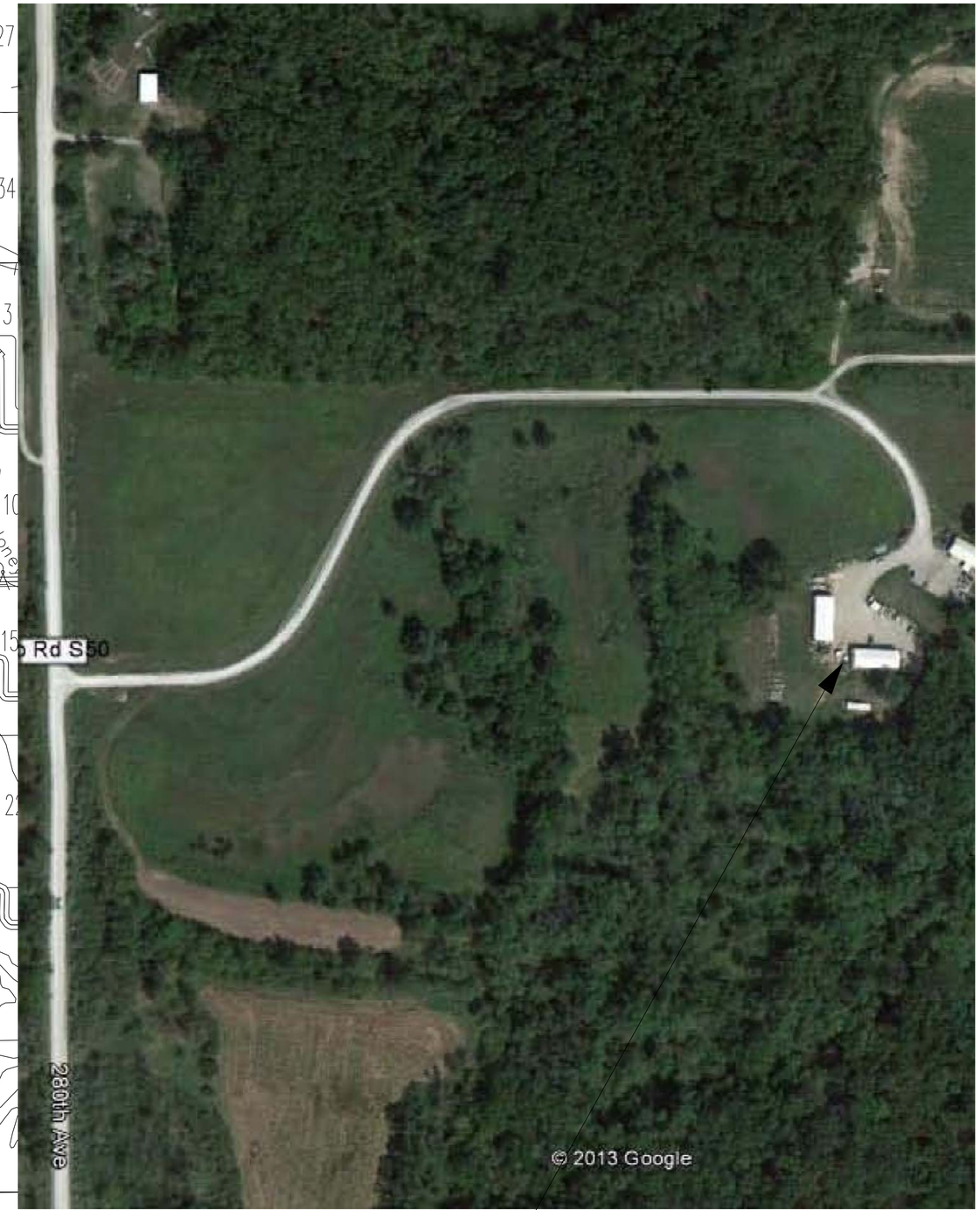

PROJECT LOCATION

CONSULTANTS:

IOWA DEPARTMENT OF NATURAL RESOURCES

ENGINEERING SERVICES - WALLACE BUILING
502 E. 9TH ST., DES MOINES, IA 50319-0034
P: 515.281.5918
F: 515.281.8685

PROJECT LOCATION

SHOP ADDITION FOR:
COLYN WMA

LUCAS COUNTY, IOWA

28248 415TH ST., RUSSELL

NO.	BY: DATE	REVISION

DRAWN BY:	PROJECT NUMBER:
JL	13-05-59-01
CHK'D BY: RR	DATE: 05.29.2013

SHEET No:

A-003

LEGEND

EXISTING/PROPOSED

—— —— ST 4" ——	DRAIN PIPE
—— —— E ——	ELECTRIC LINE
—— —— W 2" ——	WATER MAIN
HYD	YARD HYDRANT
990 990	ELEVATION
X X	8" FILTER SOCK

NORTH

Scale: 1"=500'

0' 500' 1000'

CONSULTANT:

IOWA DEPARTMENT OF NATURAL RESOURCES

ENGINEERING SERVICES - WALLACE BUILING
502 E. 9TH ST., DES MOINES, IA 50319-0034

OVERALL SITE PLAN

BUILDING EXPANSION FOR:

COLYN WILDLIFE MANAGEMENT AREA

LUCAS COUNTY, IOWA

NO.	BY DATE	REVISION

DRAWN BY:

PROJECT NUMBER: 13-05-59-01

CHK'D BY:

DATE: 6/03/2013

SHEET No: C1

LEGEND

EXISTING/PROPOSED

— — ST 4" — —	DRAIN PIPE
— — E — —	ELECTRIC LINE
— — W 2" — —	WATER MAIN
HYD	YARD HYDRANT
990 990	ELEVATION
X X	8" FILTER SOCK

NORTH

Scale: 1"=10'

0' 10' 20'

CONSULTANT:

IOWA DEPARTMENT OF NATURAL RESOURCES

ENGINEERING SERVICES - WALLACE BUILING
502 E. 9TH ST., DES MOINES, IA 50319-0034

DNR

DEMOLITION PLAN

BUILDING EXPANSION FOR:

COLYN WILDLIFE MANAGEMENT AREA

LUCAS COUNTY, IOWA

NO.	BY DATE	REVISION

DRAWN BY:

PROJECT NUMBER: 13-05-59-01

CHK'D BY:

DATE: 6/03/2013

SHEET No: **C2**

ELEC LINE

WATERLINE

EXISTING BUILDING

INSTALL 24'x24' 6-INCH REINFORCED PCC (64 SY) WITH 4-INCH GRANULAR BASE, #4'S 2' ON CENTER EACH WAY. INSTALL EXPANSION JOINTS NEXT TO BUILDING ADDITION SLAB AND EXISTING SIDEWALK.

FUEL DEPOT

ELEC LINE

CONNECT TO EXISTING WATER VALVE AND INSTALL 32 LF 1-INCH PE WATER LINE AND YARD HYDRANT

PROTECT EXISTING ELECTRIC AND WATER LINES DURING CONSTRUCTION

LP TANK LOCATION ON 5'x10' 5-INCH PCC PAD (VERIFY LOCATION WITH DNR INSPECTOR

LP SUPPLY LINE TO BUILDING ADDITION

PIPE BOLLARDS (SEE ARCHITECTURAL PLANS FOR DETAILS)

FFE=955.43

EXISTING BUILDING

24'X40' BUILDING ADDITION

4-INCH PVC STUBBED 5.0' OFF BUILDING, FL=951.00 (SEE MECHANICAL PLANS FOR CONTINUATION

20 L.F. 4-INCH PVC (MAX SDR 35) @ 5.0%

INSTALL 4-INCH PVC BACKWATER VALVE @ OUTLET FL=950.00. USE ZURN MODEL #BW2930-PV4 OR EQUIV. INSTALL RODENT GUARD @ OUTLET (AGRI DRAIN RG04 OR EQUIV.). INSTALL 30-INCH PRECAST CONCRETE SPLASH BLOCK @ OUTLET.

80 LF 8-INCH FILTER SOCK

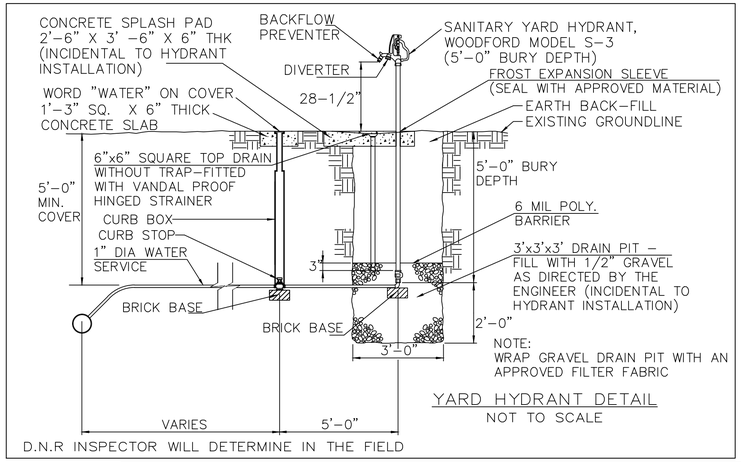

ZURN LIGHT COMMERCIAL LC

BW2930 Backwater Valve

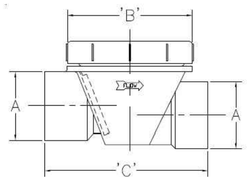

BODY TYPE	MODEL NUMBER	'A' CONNECTIONS	'B'	'C'
PVC	BW2930-PV4	4" [102]PVC Solvent Weld	7-5/8"	11-3/8"

- Recommended for light commercial or residential applications.
- PVC or ABS body is furnished with threaded access cover.
- Complete with valve seat and flapper which hangs closed while not in use.

REV. A DATE: 04/20/09 C.N. NO. 99917
DWG. NO. 62296 PRODUCT NO. BW2930

ZURN LIGHT COMMERCIAL PLUMBING PRODUCTS ♦ 2640 South Work Street ♦ Falconer, NY 14733
Phone: 1-800/906-5060 ♦ Fax: 716/665-3126 ♦ World Wide Web: www.zurn.com

LEGEND

EXISTING/PROPOSED

- ST 4" — DRAIN PIPE
- E — ELECTRIC LINE
- W 1" — WATER MAIN
- YARD HYDRANT
- 990 — ELEVATION
- 8" FILTER SOCK

NORTH

Scale: 1"=10'

0' 10' 20'

CONSULTANT:

IOWA DEPARTMENT OF NATURAL RESOURCES

ENGINEERING SERVICES - WALLACE BUILING
502 E. 9TH ST., DES MOINES, IA 50319-0034

DNR

SITE PLAN

BUILDING EXPANSION FOR:
COLYN WILDLIFE MANAGEMENT AREA
LUCAS COUNTY, IOWA

NO.	BY DATE	REVISION

DRAWN BY:
PROJECT NUMBER: 13-06-57-04
CHK'D BY:
DATE: 6/03/2013
SHEET No: C3

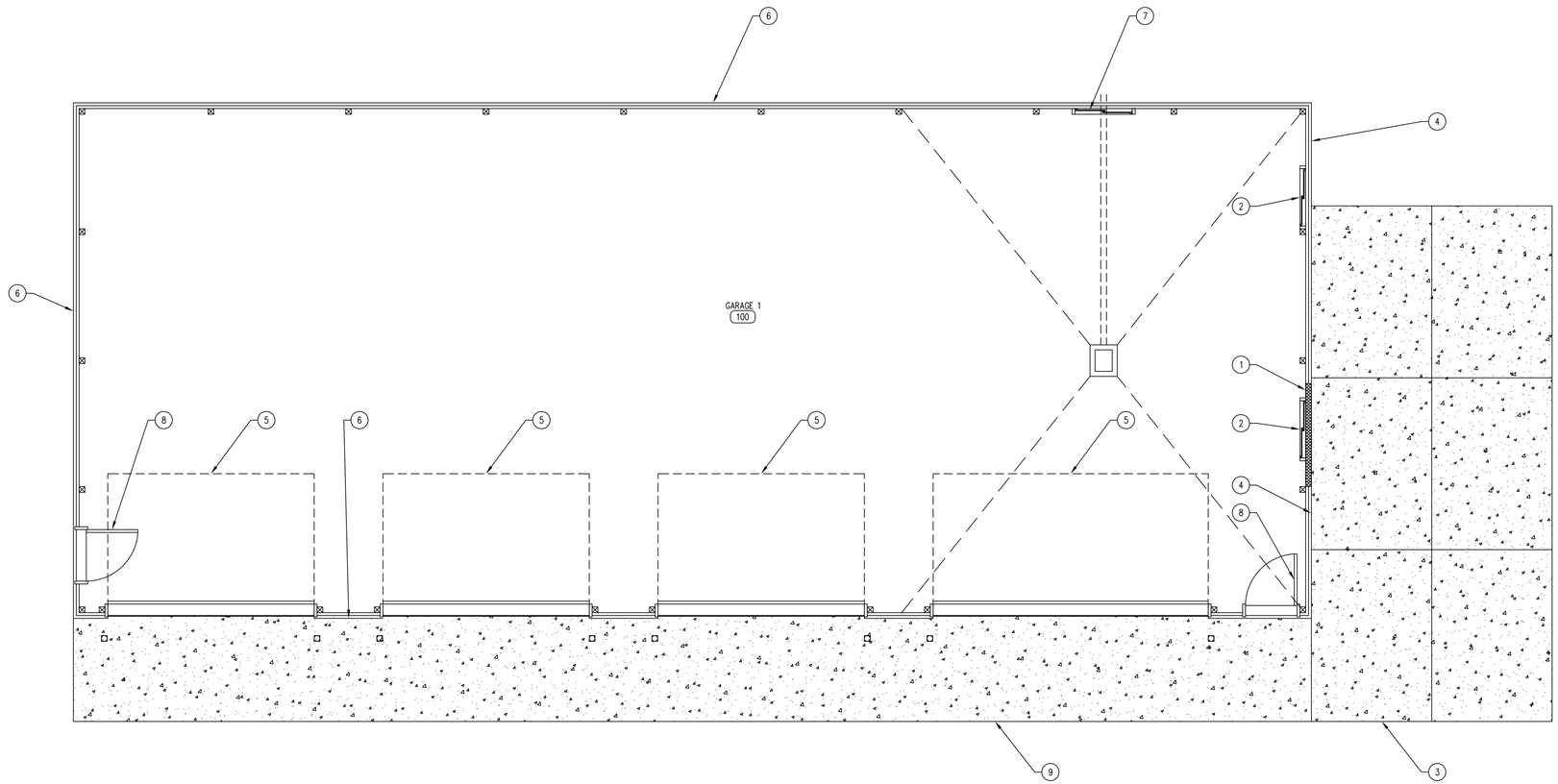

01 DEMOLITION FLOOR PLAN
SCALE: 1/4" = 1'-0"

KEYNOTES

1. DEMOLISH WALL SECTION, REFER TO SHEET A-012 FOR EXACT DIMENSIONS.
2. REMOVE EXISTING WINDOW.
3. DEMOLISH AND DISPOSE OF EXISTING CONCRETE APRON, AS SPECIFIED BY THE IOWA DNR CONSTRUCTION INSPECTOR.
4. REMOVE EXISTING METAL SIDING.
5. EXISTING OVERHEAD GARAGE DOOR TO REMAIN.
6. EXISTING METAL SIDING TO REMAIN.
7. EXISTING WINDOW TO REMAIN.
8. EXISTING MAN-DOOR TO REMAIN.
9. CONCRETE APRON TO REMAIN.

GENERAL NOTES

A. REFER TO FINISH SCHEDULE, SHEET A-600.
B. REFER TO DOOR SCHEDULE. SHEET A-600.
C. REFER TO REFLECTED CEILING PLAN FOR CEILING HEIGHTS, SHEET A-110.
D. REFER TO INDEX SHEET FOR WALL TYPES, SHEET A-002.
E. FIELD VERIFY ALL DIMENSIONS PRIOR TO CONSTRUCTION, SHEET A-101.
F. ALL ELECTRICAL TO BE NEC 2010 CODE COMPLIANT.
G. REFER TO FINISH SCHEDULE SHEET FOR COLOR AND MATERIAL SELECTIONS, SHEET A-600.

CONSULTANTS:

IOWA DEPARTMENT OF NATURAL RESOURCES
ENGINEERING SERVICES - WALLACE BUILING
502 E. 9TH ST., DES MOINES, IA 50319-0034
P: 515.281.5918
F: 515.281.8685

DEMOLITION PLAN

SHOP ADDITION FOR:
COLYN WMA

LUCAS COUNTY, IOWA

28248 415TH ST., RUSSELL

NO.	BY / DATE	REVISION

DRAWN BY: JL
PROJECT NUMBER: 13-05-59-01
CHK'D BY: RR
DATE: 05.29.2013
SHEET No: A-011

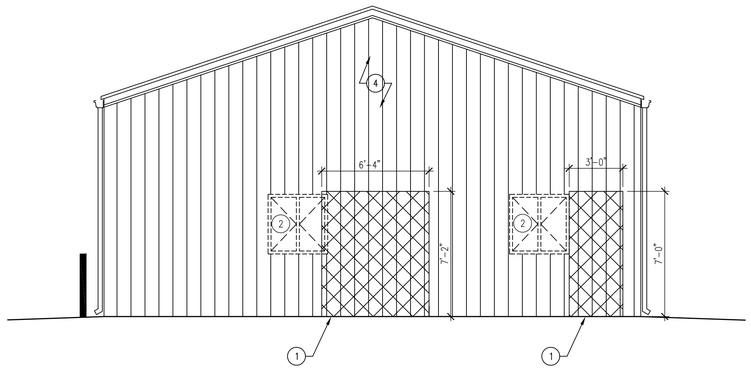

04 DEMOLITION PLAN ELELVATION-WEST
SCALE: 1/4" = 1'-0"

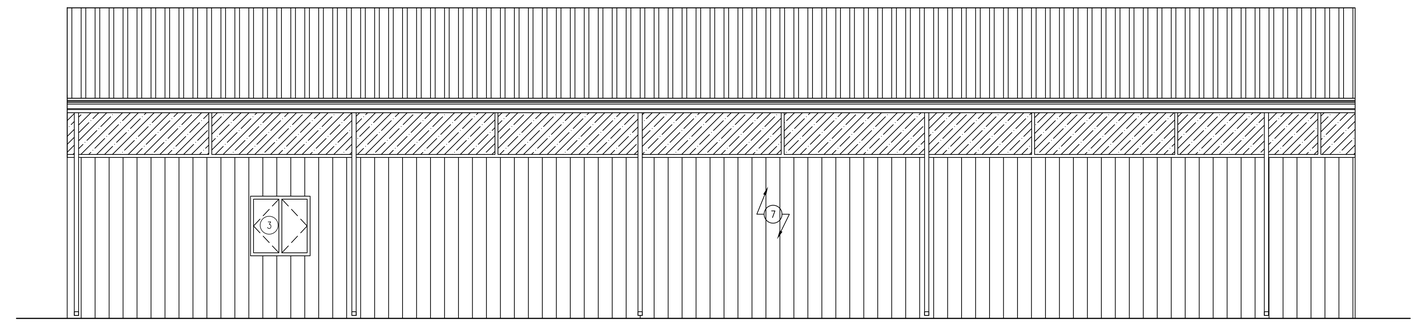

02 DEMOLITION PLAN ELEVATION-SOUTH
SCALE: 1/4" = 1'-0"

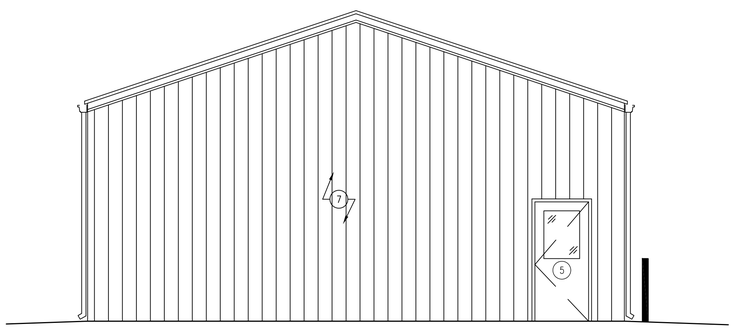

03 DEMOLITION PLAN ELEVATION-EAST
SCALE: 1/4" = 1'-0"

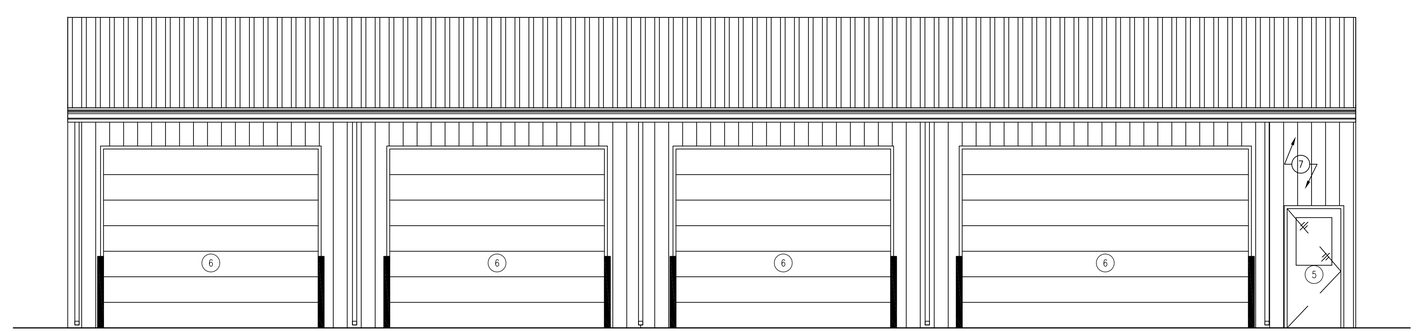

01 DEMOLITION PLAN ELEVATION-NORTH
SCALE: 1/4" = 1'-0"

KEYNOTES

1. CUT AND REMOVE AREA FOR NEW PASS THROUGH BETWEEN BUILDINGS & NEW MAN-DOOR.
2. REMOVE EXISTING WINDOW.
3. EXISTING WINDOW TO REMAIN.
4. REMOVE EXISTING METAL SIDING.
5. EXISTING MAN-DOOR TO REMAIN.
6. EXISTING OVERHEAD GARAGE DOOR TO REMAIN.
7. EXISTING METAL SIDING TO REMAIN.

GENERAL NOTES

A. FIELD VERIFY ALL DIMENSIONS PRIOR TO CONSTRUCTION, SHEET A-101.

CONSULTANTS:

IOWA DEPARTMENT OF NATURAL RESOURCES
ENGINEERING SERVICES - WALLACE BUILING
502 E. 9TH ST., DES MOINES, IA 50319-0034
P: 515.281.5918
F: 515.281.8685

DEMO ELEVATIONS

SHOP ADDITION FOR:
COLYN WMA

LUCAS COUNTY, IOWA

28248 415TH ST., RUSSELL

NO.	BY / DATE	REVISION

DRAWN BY: JL
PROJECT NUMBER: 13-05-59-01
CHK'D BY: RR
DATE: 05.29.2013
SHEET No:
A-012

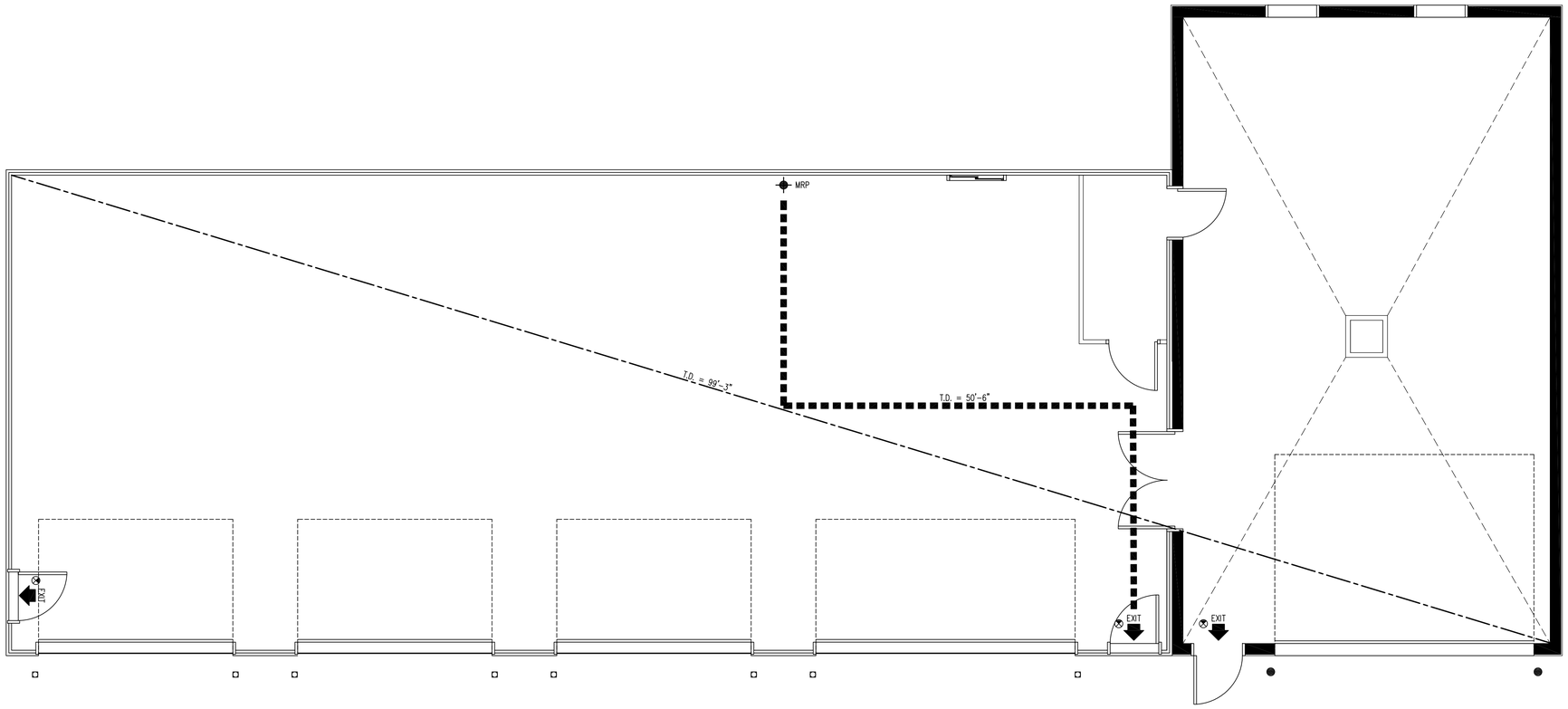

01 LIFE SAFETY PLAN
SCALE: 1/4" = 1'-0"

INTERIOR FINISH CLASSIFICATION

OCCUPANCY GROUP	WITHOUT AUTOMATIC SPRINKLER SYSTEM . (FBC TBL 803.5)		
	VERTICAL EXITS & EXIT PASSAGEWAYS	EXIT ACCESS CORRIDORS	ROOMS & ENCLOSED SPACES
GROUP B	CLASS A	CLASS B	CLASS C

CODE SUMMARY

BUILDING AREA	3,127 GSF
TENANT AREA	2,962 NSF
CONSTRUCTION TYPE	V-B WITHOUT SPRINKLER SYSTEM
OCCUPANCY	GROUP S2 – STORAGE

	REQUIRED	PROVIDED
ALLOWABLE BLDG AREA (IBC TBL 503)	9,000 SF	3,127 SF
HEIGHT LIMITATION (IBC TBL 503)	2 STORIES (40')	1 STORY (16')
AUTOMATIC SPRINKLER SYSTEM (NFPA 13)	NO	NO
EXIT ACCESS TRAVEL DISTANCE (IBC 1016.1)	200'-0"	99'-3"
EXIT ACCESS DOORWAYS (IBC TBL 1019.1)	2	3
EGRESS WIDTH PER OCCUPANT (IBC TBL 1005.1) LEVEL [.2"]	(.2") X 14 = 2.8"	3 DOORS @ 36"= 108"

LIFE SAFETY LEGEND

SYMBOL	DESCRIPTION	LINE TYPE
D.E.	EXIT TO EXIT IN LINEAR FEET	– – – – – – – – – – – –
T.D.	TRAVEL DISTANCE FROM M.R.P.	■■■■■■■■■■■■
⊗	EXIT LIGHT	
M.R.P.	MOST REMOTE POINT	✛
⬆	EXIT / ENTRY	
FEC	FIRE EXTINGUISHER	

GENERAL NOTES

A. INFORMATION PROVIDED ON THE LIFE SAFETY PLAN INDICATES EGREESS REQUIREMENTS .
B. ALL CODE REFERENCES ARE FROM INTERNATIONAL BUILDING CODE, W/ AMENDMENTS UNLESS OTHERWISE NOTED.

CONSULTANTS:

IOWA DEPARTMENT OF NATURAL RESOURCES
ENGINEERING SERVICES - WALLACE BUILING
502 E. 9TH ST., DES MOINES, IA 50319-0034
P: 515.281.5918
F: 515.281.8685

LIFE SAFETY PLAN

SHOP ADDITION FOR:
COLYN WMA

LUCAS COUNTY, IOWA

28248 415TH ST., RUSSELL

NO.	BY	DATE	REVISION

DRAWN BY: JL
PROJECT NUMBER: 13-05-59-01
CHK'D BY: RR
DATE: 05.29.2013
SHEET No: A-020

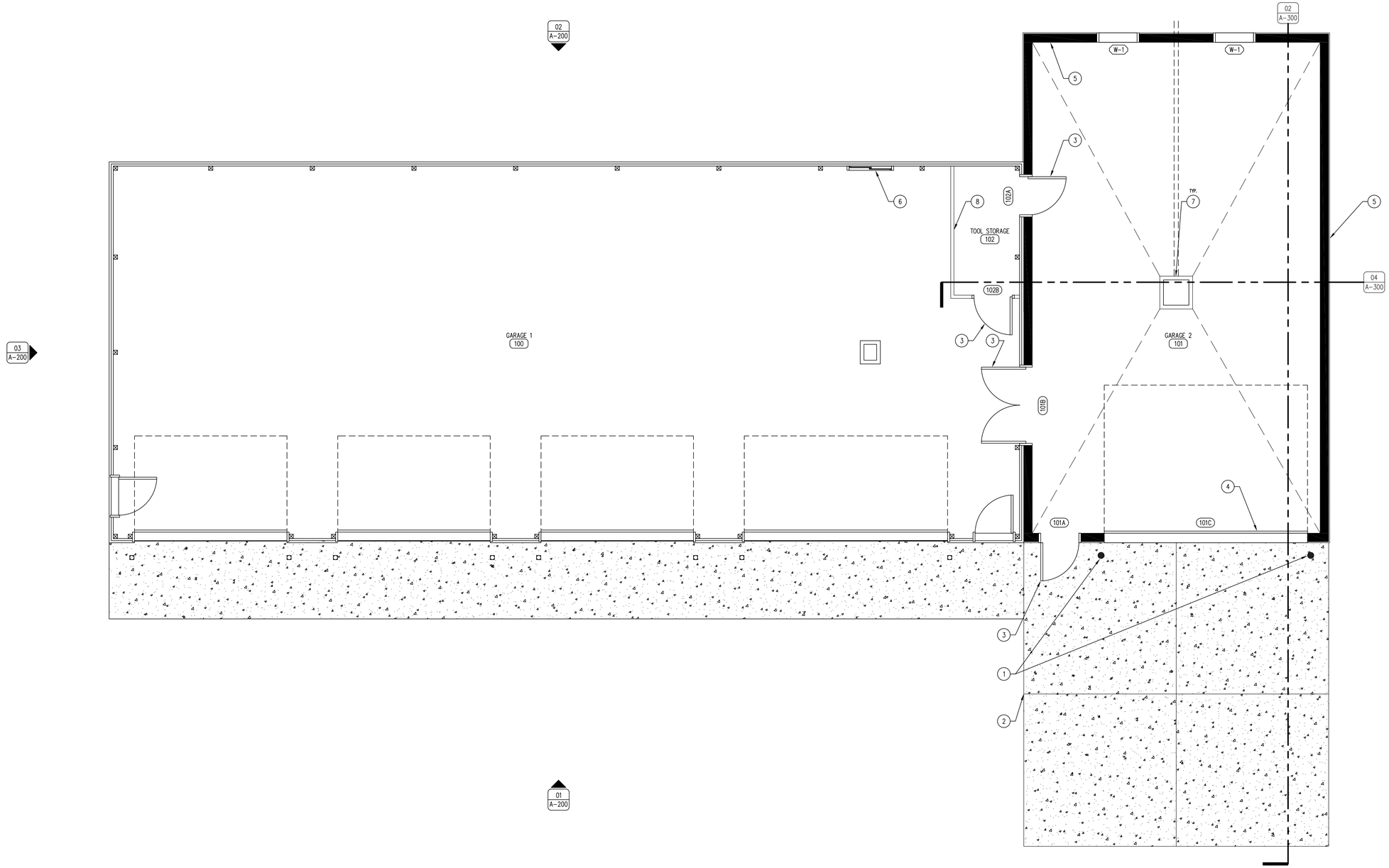

01 REFERENCE FLOOR PLAN
SCALE: 1/4" = 1'-0"

KEYNOTES

1. TRAFFIC BOLLARD WITH PLASTIC SLEEVE. REFER TO A-101 FOR DETAILS.
2. 6" CONCRETE APRON WITH #4 REBAR 24" O.C. BOTH DIRECTIONS WITH 4" SUB-BASE. SLOPE AWAY FROM BUILDING.
3. DOOR AS SCHEDULED. REFER TO SHEET A-600.
4. OVERHEAD GARAGE DOOR. REFER TO SHEET A-600.
5. S.I.P. PANEL BUILDING BY BUILDING MANUFACTURE. 29 GAUGE INTERIOR & CEILING METAL SIDING & 26 GAUGE EXTERIOR METAL SIDING. COLOR TO BE DETERMINED. SUBMIT SAMPLES.
6. EXISTING WINDOW TO REMAIN.
7. 24"x24" CONCRETE SUMP VAULT PIT W/ HEAVY-DUTY STEEL GRATE. REFER TO SHEET A-300 FOR MORE INFO.
8. 2"x4" STUD WALL 16" O.C. 8' FROM FINISHED FLOOR, COVERED WITH $\frac{1}{2}$" RE-WALL ESSENTIAL BOARD ON BOTH SIDES.

GENERAL NOTES

A. REFER TO FINISH SCHEDULE, SHEET A-600.
B. REFER TO DOOR SCHEDULE. SHEET A-600.
C. REFER TO REFLECTED CEILING PLAN FOR CEILING HEIGHTS, SHEET A-110.
D. REFER TO INDEX SHEET FOR WALL TYPES, SHEET A-002.
E. FIELD VERIFY ALL DIMENSIONS PRIOR TO CONSTRUCTION, SHEET A-101.
F. ALL ELECTRICAL TO BE NEC 2010 CODE COMPLIANT.
G. REFER TO FINISH SCHEDULE SHEET FOR COLOR AND MATERIAL SELECTIONS, SHEET A-600.

CONSULTANTS:

IOWA DEPARTMENT OF NATURAL RESOURCES
ENGINEERING SERVICES - WALLACE BUILING
502 E. 9TH ST., DES MOINES, IA 50319-0034
P: 515.281.5918
F: 515.281.8685

REFERENCE FLOOR PLAN

SHOP ADDITION FOR:
COLYN WMA

LUCAS COUNTY, IOWA

28248 415TH ST., RUSSELL

NO.	BY / DATE	REVISION

DRAWN BY: JL
PROJECT NUMBER: 13-05-59-01
CHK'D BY: RR
DATE: 05.29.2013
SHEET No:
A-100

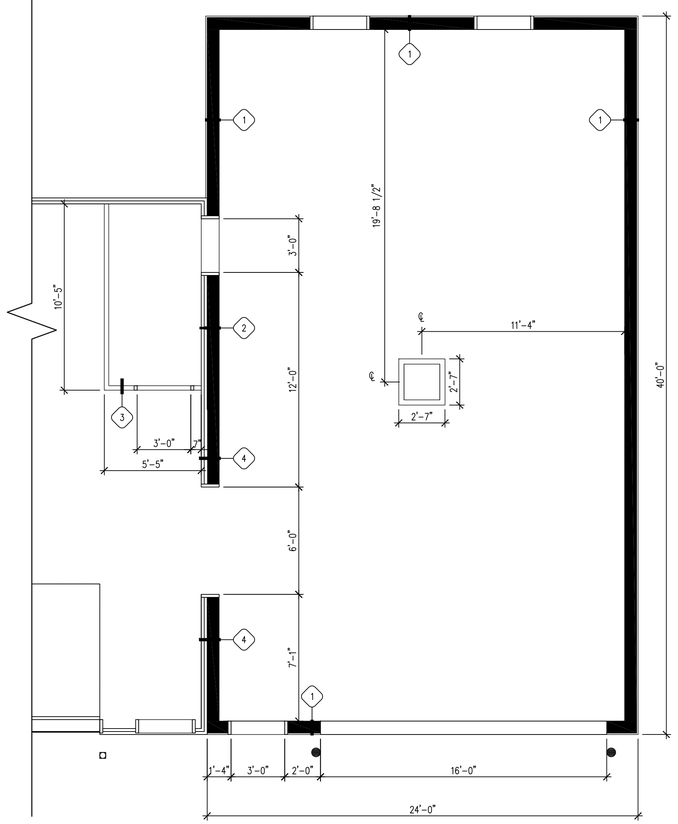

08 DIMENSION FLOOR PLAN
SCALE: 1/4" = 1'-0"

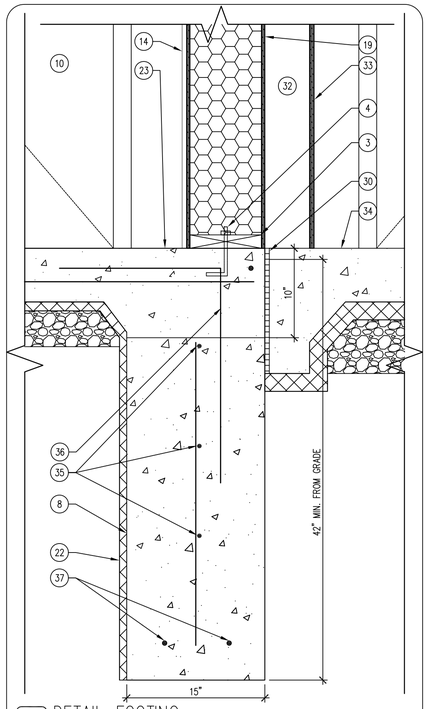

07 DETAIL-FOOTING
SCALE: 1-1/2" = 1'-0"

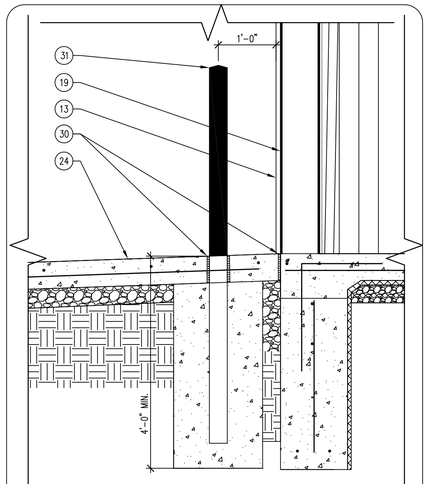

06 DETAIL-BOLLARD
SCALE: 3/4" = 1'-0"

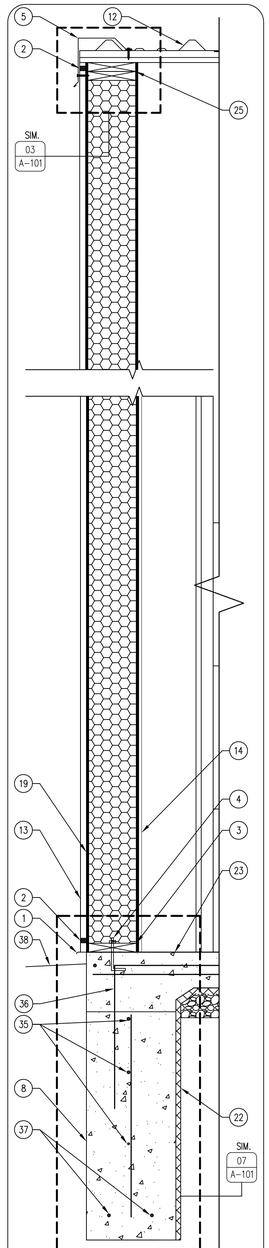

05 WALL SECTION
SCALE: 1" = 1'-0"

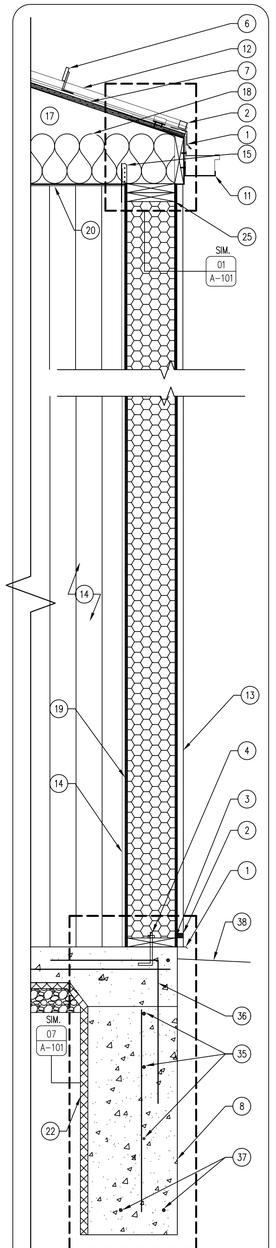

04 WALL SECTION
SCALE: 1" = 1'-0"

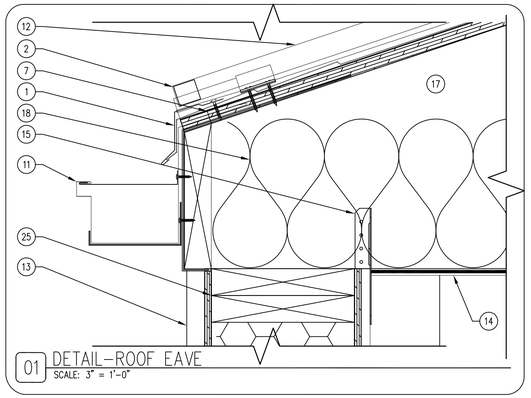

01 DETAIL-ROOF EAVE
SCALE: 3" = 1'-0"

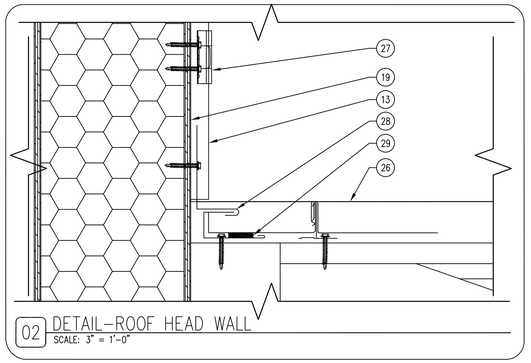

02 DETAIL-ROOF HEAD WALL
SCALE: 3" = 1'-0"

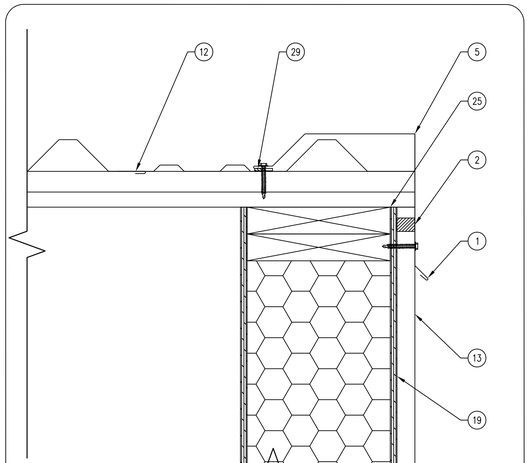

03 DETAIL-ROOF GABLE
SCALE: 3" = 1'-0"

KEYNOTES

1. FLASHING & DRIP EDGE.
2. NEOPRENE GASKET, PER MANUFACTURER'S RECOMMENDATION.
3. SIP SILL PLATE, PER MANUFACTURER'S PLANS.
4. SILL ANCHOR BOLT, $\frac{1}{2}$" DIAMETER 4'-0" O.C. MAXIMUM, EMBED 12" MINIMUM.
5. METAL SILL FLASHING BY ROOFING MANUFACTURER.
6. SNOW & ICE GUARD BAR. PLACE OVER ENTIRE PERIMETER OF ROOF TO PROTECT GUTTERS. 2' FROM EAVE.
7. $\frac{3}{4}$" PLYWOOD ROOF DECK SHEATHING WITH 30# FELT PER ROOFING MANUFACTURER'S RECOMMENDATION.
8. CONTINUOUS PERIMETER CONCRETE TRENCH FOUNDATION. MINIMUM OF 12" OVERLAP ON ALL REBAR PLACEMENT.
9. NOT USED.
10. DOOR AS SCHEDULED. REFER TO SHEET A-600.
11. METAL GUTTER AND DOWNSPOUT SYSTEM TO MATCH EXISTING STRUCTURE.
12. PRO-LOC 1, 24 GAUGE, HIDDEN FASTENER, PREFORMED METAL ROOF WITH KYNAR 500 FINISH OR APPROVED EQUAL. COLOR TO MATCH EXISTING STRUCTURE, SUBMIT SAMPLES.
13. CLASSIC PROFILE 26 GAUGE, PREFORMED METAL SIDING WITH KYNAR 500 FINISH. COLOR TO MATCH EXISTING. SUBMIT SAMPLES.
14. 29 GAUGE, PREFORMED METAL SIDING LINER PANEL. INTERIOR ONLY. COLOR-WHITE.
15. TRUSS HANGER CLIP (SPECIFIED BY PRE-ENGINEERED BUILDING SUPPLIER).
16. 2"x4" STUD WALL 16" O.C. COVERED WITH RE-WALL ESSENTIAL BOARD INTERIOR, EXTERIOR & CEILING OF ROOM. REFER TO SHEET A-600.
17. TRUSS (SPECIFIED BY PRE-ENGINEERED BUILDING SUPPLIER).
18. R-49 CERTAINTEED FIBER GLASS BLOWN-IN INSULATION.
19. STRUCTURAL INSULATED PANEL (SIP) WALL.
20. 29 GAUGE, PREFORMED METAL LINER PANEL CEILING WITH VAPOR BARRIER, PER MANUFACTURER'S RECOMMENDATION. COLOR-WHITE.
21. 24"x24" CONCRETE SUMP VAULT PIT W/ HEAVY-DUTY STEEL GRATE.
22. 1" SUB-SLAB RIGID INSULATION UNDER 6" CONCRETE SLAB - ASTM C758 TYPE V (100 PSI INSULATION). TAPE AND SEAL ALL JOINTS.
23. 6" CONCRETE SLAB, CONTINUOUS #4 REBAR 12" O.C. BOTH DIRECTIONS WITH 6" OF SUB-BASE. SLOPE SLAB TOWARDS CONCRETE VAULT.
24. 6" CONCRETE APRON WITH #4 REBAR 24" O.C. BOTH DIRECTIONS WITH 4" SUB-BASE. SLOPE AWAY FROM BUILDING.
25. TOP PLATE WITH SEALANT ON ALL POINTS, PER MANUFACTURER'S RECOMMENDATION.
26. EXISTING STRUCTURE ROOFING SYSTEM.
27. ROOF CLIPS, PER MANUFACTURER'S RECOMMENDATIONS.
28. METAL HEAD-WALL FLASHING BY PANEL MANUFACTURER.
29. SEALANT TAPE TOP & BOTTOM OF CLOSURE, PER MANUFACTURER'S RECOMMENDATION.
30. $\frac{3}{4}$" EXPANSION JOINT WITH SEALANT.
31. TRAFFIC BOLLARD WITH PLASTIC SLEEVE. 4" DIAMETER x $\frac{5}{16}$" STEEL POST, 7'-0" LONG EMBEDDED IN CONCRETE FOOTING. FILL POST SOLID WITH CONCRETE/GROUT & FILL MATERIAL.
32. EXISTING POST FRAME STRUCTURE.
33. $\frac{3}{4}$" RE-WALL ESSENTIAL BOARD.
34. EXISTING CONCRETE SLAB.
35. REINFORCEMENT BAR (#4 12" O.C. BOTH DIRECTIONS).
36. REINFORCEMENT BAR (#4 12" O.C.).
37. REINFORCEMENT BAR (#4 CONTINUOUS).
38. GRADE.

GENERAL NOTES

A. REFER TO FINISH SCHEDULE, SHEET A-600.
B. REFER TO DOOR SCHEDULE. SHEET A-600.
C. REFER TO REFLECTED CEILING PLAN FOR CEILING HEIGHTS, SHEET A-110.
D. REFER TO INDEX SHEET FOR WALL TYPES, SHEET A-002.
E. FIELD VERIFY ALL DIMENSIONS PRIOR TO CONSTRUCTION, SHEET A-101.
F. ALL ELECTRICAL TO BE NEC 2010 CODE COMPLIANT.
G. REFER TO FINISH SCHEDULE SHEET FOR COLOR AND MATERIAL SELECTIONS, SHEET A-600.

CONSULTANT:

IOWA DEPARTMENT OF NATURAL RESOURCES
ENGINEERING SERVICES - WALLACE BUILING
502 E. 9TH ST., DES MOINES, IA 50319-0034
P: 515.281.5918
F: 515.281.8685

DIMENSION FLOOR PLAN & DETAILS

SHOP ADDITION FOR:
COLYN WMA

LUCAS COUNTY, IOWA

28248 415TH ST., RUSSELL

NO.	BY DATE	REVISION

DRAWN BY: JL
PROJECT NUMBER: 13-05-59-01
CHK'D BY: RR
DATE: 05.29.2013
SHEET No: A-101

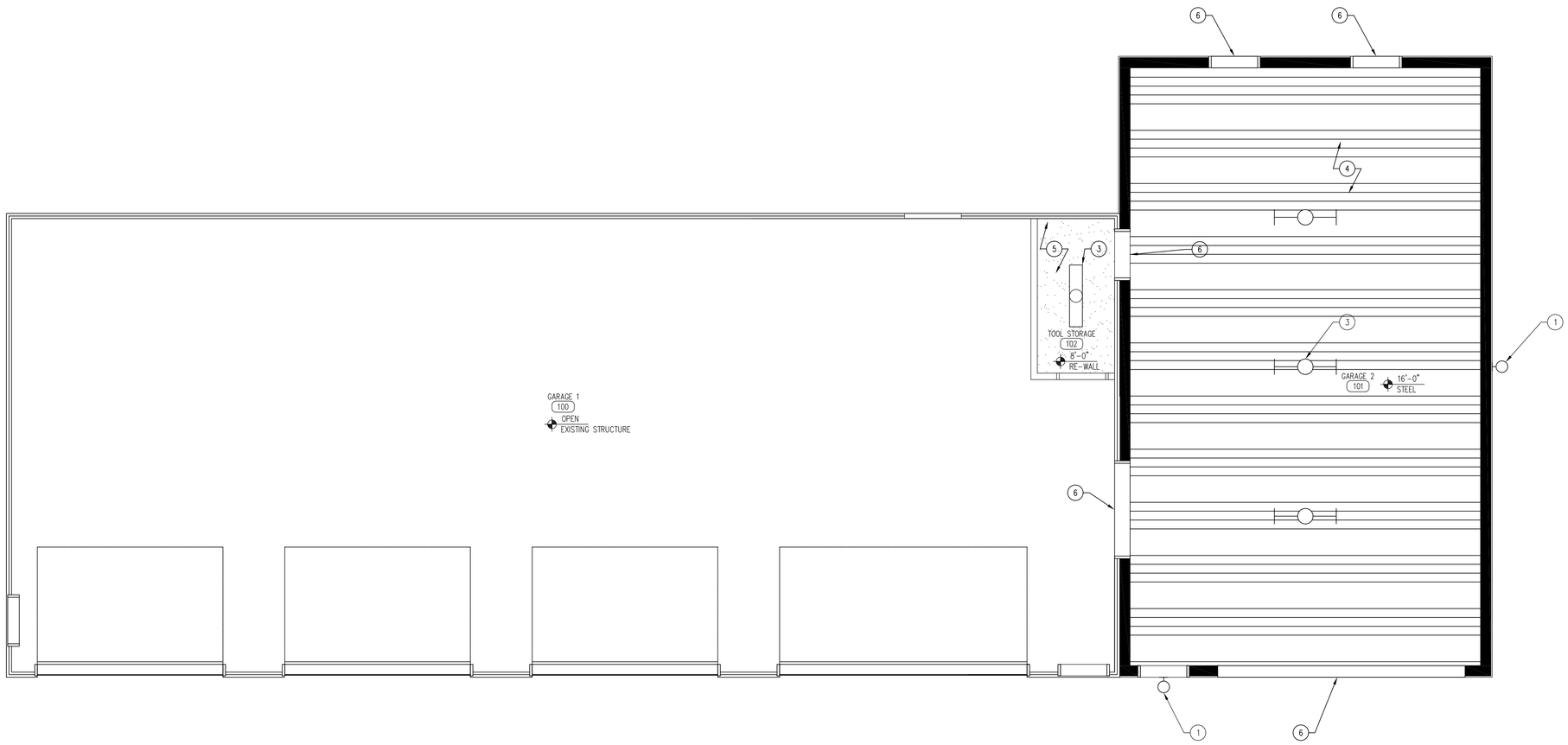

01 REFLECTED CEILING PLAN
SCALE: 1/4" = 1'-0"

CEILING FINISH LEGEND

29 GAUGE METAL CEILING W/ VAPOR BARRIER

½" RE-WALL ESSENTIAL BOARD

LIGHTING LEGEND

LED WALL PACK

4' INDUSTRIAL LIGHT

SURFACE MOUNTED FLUORESCENT LIGHT FIXTURE

KEYNOTES

1. LED WALL PACK INTEGRAL PHOTOCELL, BLACK FINISH, REFER TO ELECTRICAL PLANS.
2. NOT USED.
3. ELECTRICAL LIGHT FIXTURE. REFER TO ELECTRICAL DRAWINGS FOR FIXTURE SPECIFICATIONS AND POWER REQUIREMENTS.
4. 29 GAUGE STEEL LINER PANEL W/ VAPOR BARRIER, REFER TO SHEET A-600.
5. ½" RE-WALL ESSENTIAL BOARD.
6. DOOR/WINDOW HEADER BELOW.

GENERAL NOTES

A. REFER TO FINISH SCHEDULE, SHEET A-600.
B. REFER TO DOOR SCHEDULE. SHEET A-600.
C. REFER TO REFLECTED CEILING PLAN FOR CEILING HEIGHTS, SHEET A-110.
D. REFER TO INDEX SHEET FOR WALL TYPES, SHEET A-002.
E. FIELD VERIFY ALL DIMENSIONS PRIOR TO CONSTRUCTION, SHEET A-101.
F. ALL ELECTRICAL TO BE NEC 2010 CODE COMPLIANT.
G. REFER TO FINISH SCHEDULE SHEET FOR COLOR AND MATERIAL SELECTIONS, SHEET A-600.

CONSULTANT:

IOWA DEPARTMENT OF NATURAL RESOURCES
ENGINEERING SERVICES - WALLACE BUILING
502 E. 9TH ST., DES MOINES, IA 50319-0034
P: 515.281.5918
F: 515.281.8685

REFLECTED CEILING PLAN

SHOP ADDITION FOR:
COLYN WMA

LUCAS COUNTY, IOWA

28248 415TH ST., RUSSELL

NO.	BY / DATE	REVISION

DRAWN BY: JL
PROJECT NUMBER: 13-05-59-01
CHK'D BY: RR
DATE: 05.29.2013
SHEET No: A-110

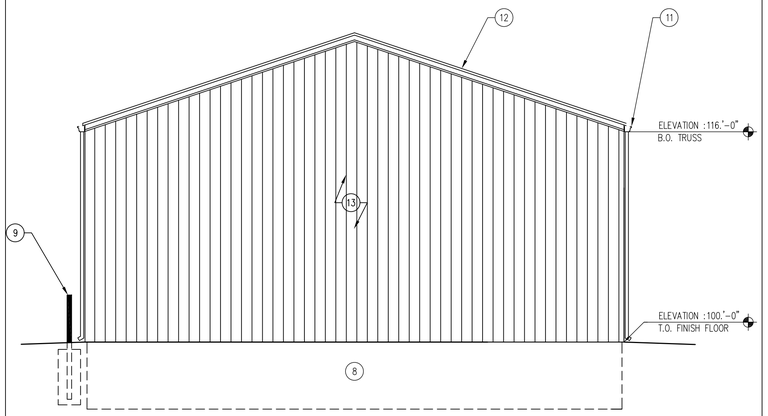

04 BUILDING ELEVATION-WEST
SCALE: 3/16" = 1'-0"

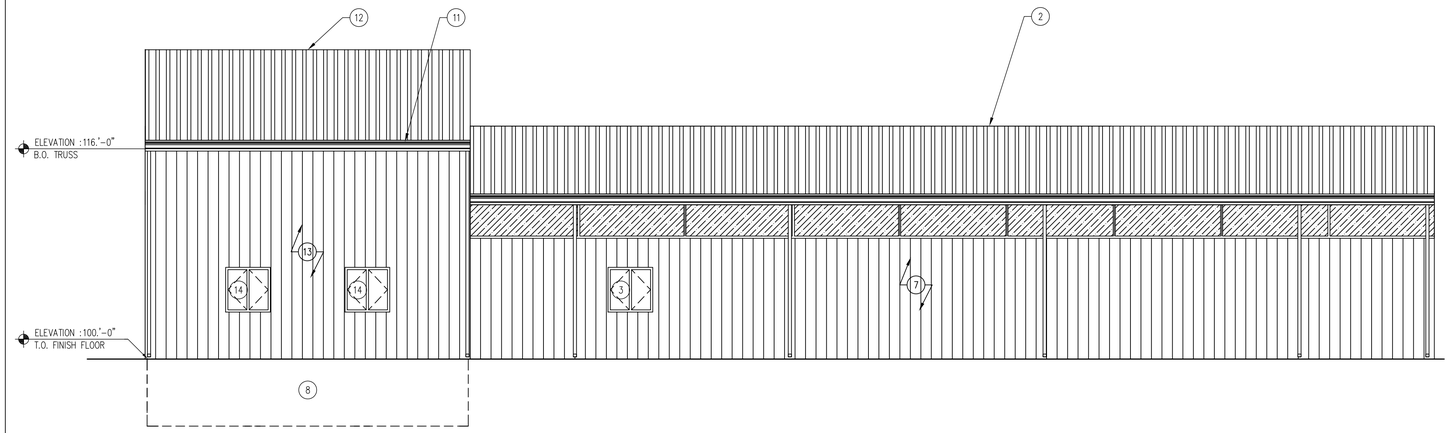

02 BUILDING ELEVATION-SOUTH
SCALE: 3/16" = 1'-0"

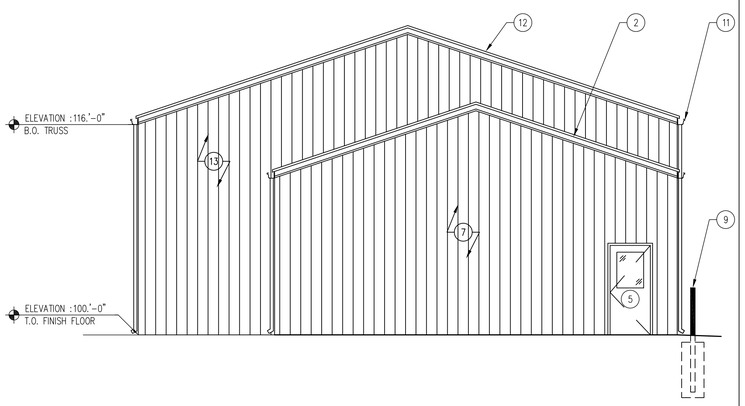

03 BUILDING ELEVATION-EAST
SCALE: 3/16" = 1'-0"

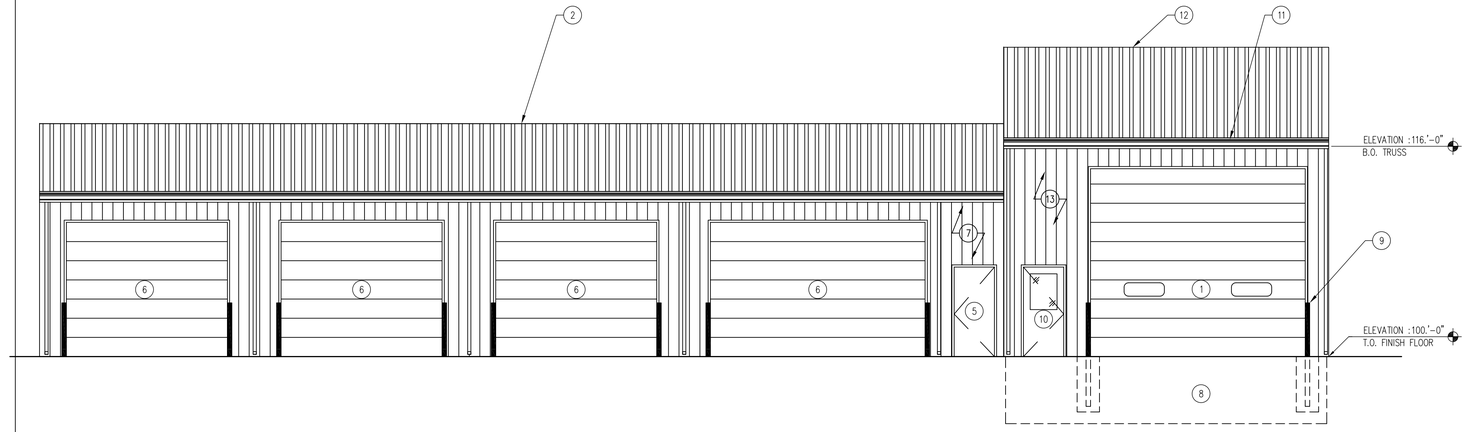

01 BUILDING ELEVATION-NORTH
SCALE: 3/16" = 1'-0"

KEYNOTES

1. OVERHEAD GARAGE DOOR AS SCHEDULED. REFER TO SHEET A-600.
2. EXISTING ROOFING SYSTEM TO REMAIN.
3. EXISTING WINDOW TO REMAIN.
4. NOT USED.
5. EXISTING MAN-DOOR TO REMAIN.
6. EXISTING OVERHEAD GARAGE DOOR TO REMAIN.
7. EXISTING METAL SIDING TO REMAIN.
8. CONTINUOUS PERIMETER CONCRETE TRENCH FOUNDATION. AS SHOWN.
9. TRAFFIC BOLLARD WITH PLASTIC SLEEVE. REFER TO SHEET A-101.
10. DOOR AS SCHEDULED. REFER TO SHEET A-600.
11. METAL GUTTER AND DOWNSPOUT SYSTEM TO MATCH EXISTING STRUCTURE.
12. PRO-LOC 1, 24 GAUGE, HIDDEN FASTENER, PREFORMED METAL ROOF WITH KYNAR 500 FINISH OR APPROVED EQUAL. COLOR TO MATCH EXISTING STRUCTURE, SUBMIT SAMPLES.
13. CLASSIC PROFILE 26 GAUGE, PREFORMED METAL SIDING WITH KYNAR 500 FINISH. COLOR TO MATCH EXISTING. SUBMIT SAMPLES.
14. WINDOW AS SCHEDULED. REFER TO SHEET A-600.

GENERAL NOTES

A. REFER TO FINISH SCHEDULE, SHEET A-600.
B. REFER TO DOOR SCHEDULE. SHEET A-600.
C. REFER TO REFLECTED CEILING PLAN FOR CEILING HEIGHTS, SHEET A-110.
D. REFER TO INDEX SHEET FOR WALL TYPES, SHEET A-002.
E. FIELD VERIFY ALL DIMENSIONS PRIOR TO CONSTRUCTION, SHEET A-101.
F. ALL ELECTRICAL TO BE NEC 2010 CODE COMPLIANT.
G. REFER TO FINISH SCHEDULE SHEET FOR COLOR AND MATERIAL SELECTIONS, SHEET A-600.

CONSULTANTS:

IOWA DEPARTMENT OF NATURAL RESOURCES
ENGINEERING SERVICES - WALLACE BUILING
502 E. 9TH ST., DES MOINES, IA 50319-0034
P: 515.281.5918
F: 515.281.8685

EXTERIOR ELEVATIONS

SHOP ADDITION FOR:
COLYN WMA

LUCAS COUNTY, IOWA

28248 415TH ST., RUSSELL

NO.	BY / DATE	REVISION

DRAWN BY: JL
PROJECT NUMBER: 13-05-59-01
CHK'D BY: RR
DATE: 05.29.2013
SHEET No:
A-200

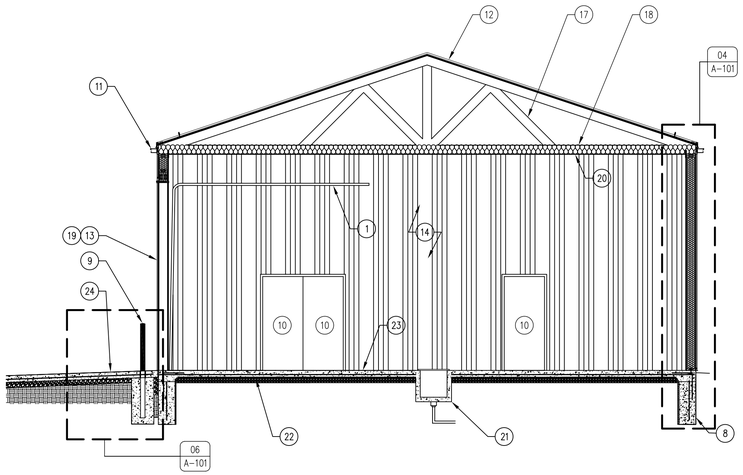

04 BUILDING SECTION
SCALE: 3/16" = 1'-0"

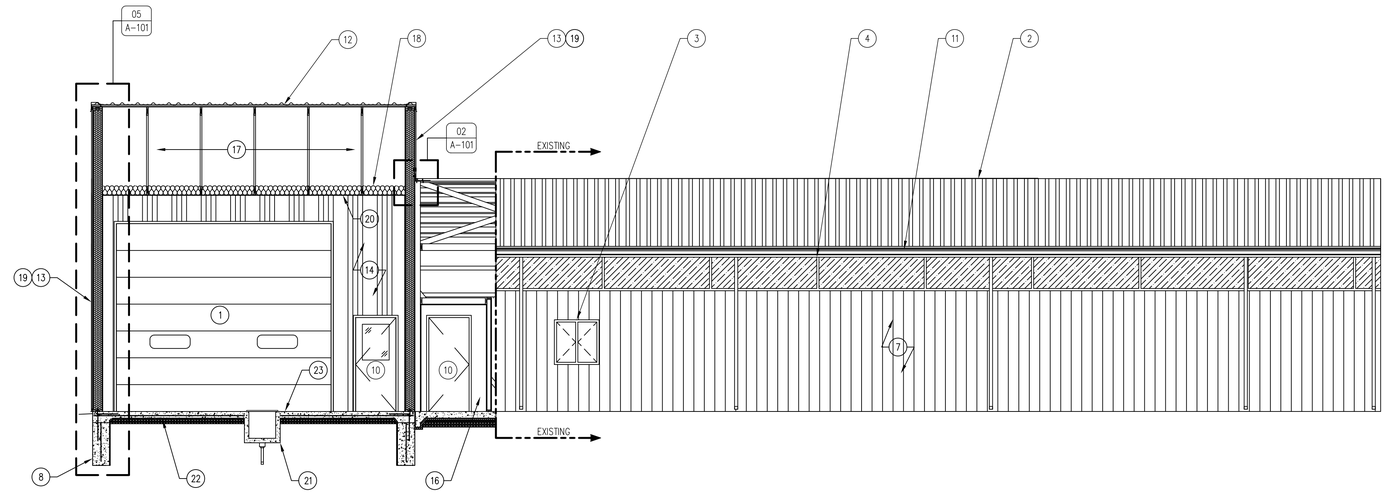

02 BUILDING SECTION
SCALE: 3/16" = 1'-0"

03 NOT USED

01 NOT USED

KEYNOTES

1. OVERHEAD GARAGE DOOR AS SCHEDULED. REFER TO SHEET A-600.
2. EXISTING ROOFING SYSTEM TO REMAIN.
3. EXISTING WINDOW TO REMAIN.
4. EXISTING POLY-CARBONATE TRANSLUCENT SIDING PANEL TO REMAIN.
5. EXISTING MAN-DOOR TO REMAIN.
6. EXISTING OVERHEAD GARAGE DOOR TO REMAIN.
7. EXISTING METAL SIDING TO REMAIN.
8. CONTINUOUS PERIMETER CONCRETE TRENCH FOUNDATION. AS SHOWN.
9. TRAFFIC BOLLARD WITH PLASTIC SLEEVE. REFER TO SHEET A-101.
10. DOOR AS SCHEDULED. REFER TO SHEET A-600.
11. METAL GUTTER AND DOWNSPOUT SYSTEM TO MATCH EXISTING STRUCTURE.
12. PRO-LOC 1, 24 GAUGE, HIDDEN FASTENER, PREFORMED METAL ROOF WITH KYNAR 500 FINISH OR APPROVED EQUAL. COLOR TO MATCH EXISTING STRUCTURE, SUBMIT SAMPLES.
13. CLASSIC PROFILE 26 GAUGE, PREFORMED METAL SIDING WITH KYNAR 500 FINISH. COLOR TO MATCH EXISTING. SUBMIT SAMPLES.
14. 29 GAUGE, PREFORMED METAL LINER PANEL. INTERIOR ONLY. COLOR-WHITE.
15. NOT USED.
16. 2"x4" STUD WALL 16" O.C. COVERED WITH RE-WALL ESSENTIAL BOARD INTERIOR, EXTERIOR & CEILING OF ROOM. REFER TO SHEET A-600.
17. TRUSS (SPECIFIED BY PRE-ENGINEERED BUILDING SUPPLIER).
18. R-49 CERTAINTEED FIBER GLASS BLOWN-IN INSULATION.
19. STRUCTURAL INSULATED PANEL (SIP) WALL.
20. 29 GAUGE, PREFORMED METAL CEILING WITH LINING BACKED WITH VAPOR BARRIER, PER MANUFACTURER'S RECOMMENDATION. COLOR-WHITE.
21. 24"x24" CONCRETE SUMP PUMP VAULT W/ HEAVY-DUTY STEEL GRATE.
22. 1" SUB-SLAB RIGID INSULATION UNDER 6" CONCRETE SLAB - ASTM C758 TYPE V (100 PSI INSULATION). TAPE AND SEAL ALL JOINTS.
23. 6" CONCRETE SLAB, CONTINUOUS #4 REBAR 12" O.C. BOTH DIRECTIONS WITH 6" OF SUB-BASE. SLOPE SLAB TOWARDS CONCRETE VAULT.
24. 6" CONCRETE APRON WITH #4 REBAR 24" O.C. BOTH DIRECTIONS WITH 4" SUB-BASE. SLOPE AWAY FROM BUILDING.

GENERAL NOTES

A. REFER TO FINISH SCHEDULE, SHEET A-600.
B. REFER TO DOOR SCHEDULE. SHEET A-600.
C. REFER TO REFLECTED CEILING PLAN FOR CEILING HEIGHTS, SHEET A-110.
D. REFER TO INDEX SHEET FOR WALL TYPES, SHEET A-002.
E. FIELD VERIFY ALL DIMENSIONS PRIOR TO CONSTRUCTION, SHEET A-101.
F. ALL ELECTRICAL TO BE NEC 2010 CODE COMPLIANT.
G. REFER TO FINISH SCHEDULE SHEET FOR COLOR AND MATERIAL SELECTIONS, SHEET A-600.

CONSULTANTS:

IOWA DEPARTMENT OF NATURAL RESOURCES
ENGINEERING SERVICES - WALLACE BUILING
502 E. 9TH ST., DES MOINES, IA 50319-0034
P: 515.281.5918
F: 515.281.8685

BUILDING SECTIONS

SHOP ADDITION FOR:
COLYN WMA

LUCAS COUNTY, IOWA

28248 415TH ST., RUSSELL

NO.	BY / DATE	REVISION

DRAWN BY: JL
PROJECT NUMBER: 13-05-59-01
CHK'D BY: RR
DATE: 05.29.2013
SHEET No:
A-300

DOOR TYPES

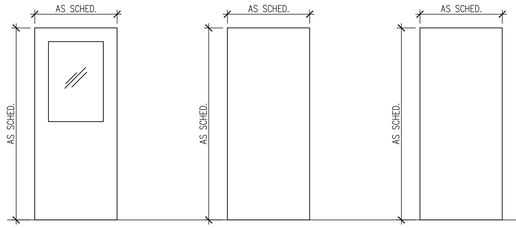

D-1
STEELCRAFT "L" SERIES
HALF-LIGHT
INSULATED

D-2
STEELCRAFT "L" SERIES
STEEL DOOR
INSULATED

D-3
SOLID CORE
PREMIUM GRADE "A"
MAPLE

FRAME TYPES

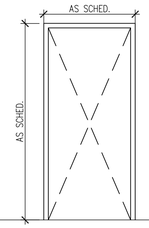

F-1
HOLLOW METAL

WINDOW TYPES

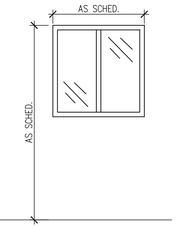

W-1
VINLY
SLIDER WINDOW
PELLA ENCOMPASS

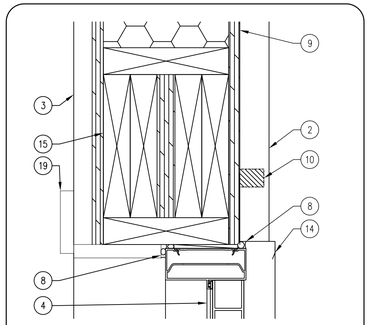

01 DOOR DETAIL-HEADER
SCALE: 3" = 1'-0"

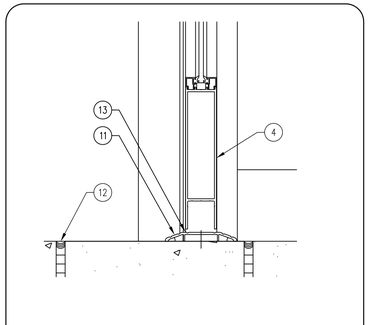

02 DOOR DETAIL-THRESHOLD
SCALE: 3" = 1'-0"

08 NOT USED
SCALE: 3" = 1'-0"

07 NOT USED
SCALE: 3" = 1'-0"

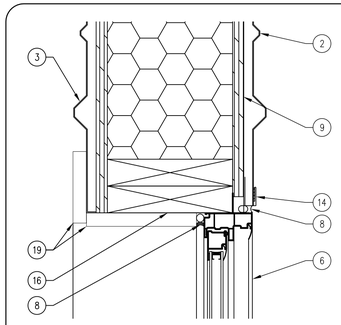

06 WNDOW DETAIL-JAMB
SCALE: 3" = 1'-0"

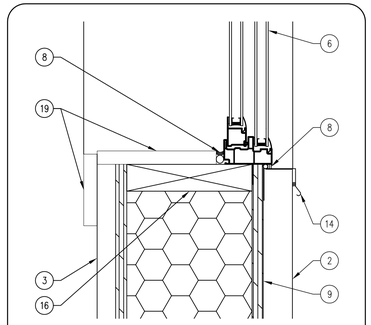

05 WINDOW DETAIL-SILL
SCALE: 3" = 1'-0"

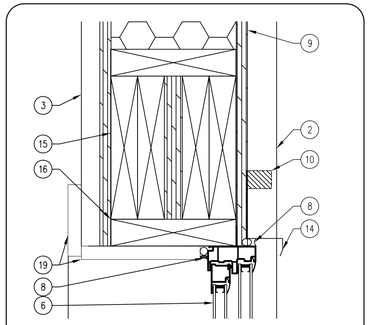

04 WINDOW DETAIL-HEADER
SCALE: 3" = 1'-0"

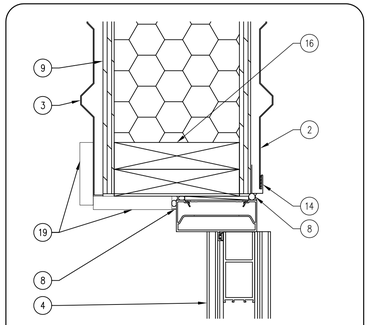

03 DOOR DETAIL-JAMB
SCALE: 3" = 1'-0"

FINISH SCHEDULE

ROOM #	ROOM NAME	FLOORING	BASE	NORTH WALL FINISH	EAST WALL FINISH	SOUTH WALL FINISH	WEST WALL FINISH	CEILING	NOTES
101	GARAGE 2	CONC-1	–	SS-1	SS-1	SS-1	SS-1	SS-1	W/ VAPOR BARRIER (CEILING ONLY)
102	TOOL STORAGE	CONC-1	–	RWL-1	RWL-1	RWL-1	RWL-1	ERW-1	–
–	–	–	–	–	–	–	–	–	–
–	–	–	–	–	–	–	–	–	–
–	–	–	–	–	–	–	–	–	–
–	–	–	–	–	–	–	–	–	–
–	–	–	–	–	–	–	–	–	–
–	–	–	–	–	–	–	–	–	–
–	–	–	–	–	–	–	–	–	–
–	–	–	–	–	–	–	–	–	–

FINISH DESCRIPTION

FINISH MARK	MATERIAL	MANUFACTURER INFO		DIMENSION	COLOR	FINISH	COMMENTS
		COMPANY NAME	PRODUCT NUMBER				
FLOOR FINISH							
CONC-1	ACID STAINED & SEALED CONCRETE	–	–	–	TBD	SEALED	SUBMIT SAMPLES FOR APPROVAL
–	–	–	–	–	–	–	–
–	–	–	–	–	–	–	–
–	–	–	–	–	–	–	–
–	–	–	–	–	–	–	–
–	–	–	–	–	–	–	–
CEILING FINISH							
SS-1	STEEL LINER SIDING PANEL	–	–	29 GAUGE	WHITE		W/ VAPOR BARRIER (CEILING ONLY)
RWL-1	ESSENTIAL RE-WALL	RE-WALL COMPANY	REWALL ESSENTIAL BOARD	1/2"	WHITE	–	–
–	–	–	–	–	–	–	–
ROOFING							
SS-2	PRO-LOC I STEEL ROOF	METAL SALES MNAUFACTURING CO.	–	24 GAUGE	TBD	KYNAR 500	–
–	–	–	–	–	–	–	–
–	–	–	–	–	–	–	–
–	–	–	–	–	–	–	–
–	–	–	–	–	–	–	–
EXTERIOR FINISH							
SS-3	STEEL LINER SIDING PANEL	METAL SALES MNAUFACTURING CO.	CLASSIC PROFILE I	26 GAUGE	TBD	KYNAR 500	–
–	–	–	–	–	–	–	–
INTERIOR FINISH							
SS-1	STEEL STORM SIDING PANEL	METAL SALES MNAUFACTURING CO.	CLASSIC-PROFILE I	29 GAUGE	WHITE	–	W/ STORM PANEL LINER
RWL-1	ESSENTIAL RE-WALL	RE-WALL COMPANY	REWALL ESSENTIAL BOARD	1/2"	WHITE	–	–
–	–	–	–	–	–	–	–

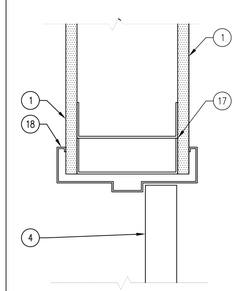

09 DOOR DETAIL-JAMB
SCALE: 3" = 1'-0"

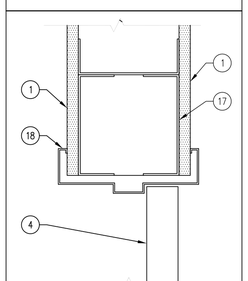

10 DOOR DETAIL-HEADER
SCALE: 3" = 1'-0"

DOOR SCHEDULED

	DOOR NUMBER	DOOR: DIMENSION WIDTH	DOOR: DIMENSION HEIGHT	DOOR: DIMENSION THICK.	DOOR: TYPE	DOOR: GLASS	DOOR: FINISH	FRAME: DETAILS HEAD	FRAME: DETAILS JAMB	FRAME: DETAILS THRESHOLD	FRAME: TYPE	FRAME: FINISH	FIRE RATING LABEL	HARDWARE SET #	HARDWARE KEYSIDE ROOM NUMBER	COMMENTS
EXTERIOR	101A	3'-0"	7'-0"	1 3/4"	D-1	MANUF.	MANUF.	01/A-600	03/A-600	02/A-600	F-1	MANUF.	–	3	N/A	EXT. STEELCRAFT "L" SERIES HALF-LIGHT
EXTERIOR	101C	16'-0"	14'-0"	–	MANUF.	MANUF.	–	–	–	–	MANUF.	MANUF.	–	–	–	R-6 GARAGE DOOR W/ SAFETY WINDOWS
EXTERIOR	–	–	–	–	–	–	–	–	–	–	–	–	–	–	–	–
INTERIOR	101B	6'-0"	7-0"	1 3/4"	D-2	–	MANUF.	01/A-600	03/A-600	–	F-1	MANUF.	–	2	100	DOUBLE LEAF W/ ASTRAGAL
INTERIOR	102A	3'-0"	7-0"	1 3/4"	D-3	–	MANUF.	10/A-600	09/A-600	–	F-1	MANUF.	–	1	101	PREMIUM GRADE "A" SOLID WOOD-MAPLE
INTERIOR	102B	3'-0"	7'-0"	1-3/4"	D-3	–	MANUF.	10/A-600	09/A-600	–	F-1	MANUF.	–	1	100	PREMIUM GRADE "A" SOLID WOOD-MAPLE

WINDOW SCHEDULE

WINDOW TYPE	WINDOW: DIMENSION WIDTH	WINDOW: DIMENSION HEIGHT	WINDOW: TYPE	WINDOW: GLASS	WINDOW: FINISH	FRAME: DETAILS HEAD	FRAME: DETAILS JAMB	FRAME: DETAILS SILL	FRAME: TYPE	FRAME: FINISH	QUANTITY	COMMENTS
W-1	36"	36	1	CLEAR	TBD	04/A-600	06/A-600	05/A-600	–	TBD	2	PELLA ENCOMPASS- SLIDER WINDOW

HARDWARE TYPES

HARDWARE SET NO. – DOORS: 102A & 102B

3 EA. HINGES	FBB179 4 1/2 X 4 1/2
1 EA. OFFICE LOCKSET	ND80PD (ATHENS)
1 EA. FLOOR STOP	FS 444
3 EA. SILENCERS	SR66 (BLACK)

HARDWARE SET NO. 2 – DOORS: 101B

6 EA. HINGES	FBB179 4 1/2 X 4 1/2
2 EA. PASSAGE	ND10S (ATHENS)
2 EA. FLOOR STOPS	FS 444
6 EA. SILENCERS	SR66 (BLACK)

HARDWARE SET NO. 3 – DOORS: 101A

3 EA. HINGES	FBB179 4 1/2 X 4 1/2
1 EA. PASSAGE	ND50PD (ATHENS)
1 EA. FLOOR STOPS	FS 444
3 EA. SILENCERS	SR66 (BLACK)

KEYNOTES

1. ½" RE-WALL ESSENTIAL BOARD
2. 26 GAUGE METAL SIDING
3. 29 GAUGE METAL SIDING (INTERIOR ONLY)
4. DOOR AS SCHEDULED
5. FLOOR AS SCHEDULED
6. WINDOW AS SCHEDULED
7. MTL. BOX STUD HEADER
8. CONTINUOUS SEALANT AND BACKER ROD
9. S.I.P. WALL SYSTEM AS SCHEDULED
10. NEOPRENE GASKET, PER SIDING MANUFACTURER.
11. ADA COMPLIANT EXTERIOR THRESHOLD
12. ½" EXPANSION JOINT WITH SEALANT
13. BRUSH TYPE GASKET FOR EXTERIOR DOORS
14. METAL FLASHING W/ SEALANT AS REQUIRED
15. S.I.P. HEADER, PER MANUFACTURER RECOMMENDATION
16. TREATED 2X, PER MANUFACTURER RECOMMENDATION
17. BOX STUD HEADER
18. DOOR FRAME AS SCHEDULED
19. HARD MAPLE TRIM/SILL

GENERAL NOTES

A. WOOD DOORS TO BE GRADE "A " MAPLE WOOD VENEER SOLID CORE WITH CLEAR URETHANE FINISH TO BE APPROVED BY ARCHITECT.
B. ALL HARDWARE MODEL NUMBERS BASED ON SCHLAGE "D-SERIES " LEVERS AND "IVES" ARCHITECTURAL TRIM/ STOPS UNLESS NOTED OTHERWISE.
C. HARDWARE FINISH TO BE : "SATIN NICKEL (619) ", UNLESS NOTED OTHERWISE.

CONSULTANTS:

IOWA DEPARTMENT OF NATURAL RESOURCES
ENGINEERING SERVICES - WALLACE BUILING
502 E. 9TH ST., DES MOINES, IA 50319-0034
P: 515.281.5918
F: 515.281.8685

FINISH, DOOR & FRAME SCHEDULES

SHOP ADDITION FOR:
COLYN WMA

LUCAS COUNTY, IOWA

28248 415TH ST., RUSSELL

NO.	BY / DATE	REVISION

DRAWN BY:
PROJECT NUMBER: 13-05-59-01
CHK'D BY:
DATE: 05.29.2013
SHEET No: A-600

MECHANICAL SYMBOLS

CW	COLD WATER
SS	SOIL, WASTE, OR SANITARY SEWER BELOW FLOOR OR GRADE
LP	LIQUEFIED PETROLEUM
FD-1	FLOOR DRAIN – TYPE AND SIZE AS NOTED
HB-1	HOSE BIBB – TYPE AND SIZE AS NOTED
T	LOCATION OF THERMOSTAT/ROOM TEMPERATURE SENSOR +48" OR AS NOTED
HHP A	EQUIPMENT TAG
	RISER DOWN (ELBOW)
	RISER UP (ELBOW)
	NEW PIPING
	SHUT OFF VALVE (BALL, BUTTERFLY, ETC. REFER TO SPECS)
	EXISTING PIPING TO REMAIN
	EXISTING PIPING TO BE REMOVED

HVAC GENERAL NOTES

MECHANICAL CONTRACTOR TO PROVIDE A COMPLETE HVAC SYSTEM, INCLUDING COMBUSTION AIR AND FLUE PIPING, MECHANICAL EQUIPMENT, SUPPORTS, HANGERS AND ALL APPURTENANCES. INSTALL ALL EQUIPMENT PER MANUFACTURER'S RECOMMENDATIONS. INSTALL SYSTEM TO MEET ALL CITY AND STATE CODES AND REQUIREMENTS.

PLUMBING GENERAL NOTES

MECHANICAL CONTRACTOR TO PROVIDE A COMPLETE PLUMBING SYSTEM, INCLUDING, PIPE, HANGERS, SUPPORTS, EQUIPMENT, VALVES AND ALL APPURTENANCES. INSTALL ALL EQUIPMENT PER MANUFACTURER'S RECOMMENDATIONS. SIZE AND INSTALL SYSTEM PER PLUMBING CODE. COMPLY WITH ALL LOCAL AND STATE CODES AND REQUIREMENTS.

DRAWING PLANS, SCHEMATICS, AND DIAGRAMS INDICATE GENERAL LOCATION AND ARRANGEMENT OF PLUMBING SYSTEM.

MECHANICAL GENERAL NOTES

COORDINATE LOCATION/INSTALLATION OF MECHANICAL AND ELECTRICAL WORK WITH ALL OTHER TRADES. NO ASPECT OF A SYSTEM INSTALLATION OR ITS ROUGH-IN SHALL COMMENCE UNTIL PROPER AND TIMELY COORDINATION WITH ALL TRADES ASSOCIATED WITH THE INSTALLATION HAS TRANSPIRED. ITEMS TO BE COORDINATED SHALL INCLUDE BUT NOT BE LIMITED TO: BUILDING STRUCTURE, ALL PIPING SYSTEMS, LIGHT FIXTURES, CONDUITS, ETC. REFER TO ALL GENERAL, MECHANICAL, AND ELECTRICAL DRAWINGS AND SPECIFICATIONS FOR THIS PROJECT.

INCORPORATE INTO INSTALLATION MECHANICAL SPECIFICATIONS, DRAWINGS, STATE AND LOCAL CODES, AND OTHER APPLICABLE REQUIREMENTS.

PIPING SHALL NOT BLOCK CLEARANCES TO MECHANICAL EQUIPMENT. INSTALLING CONTRACTOR SHALL BE RESPONSIBLE FOR RELOCATING PIPING IF ACCESS CLEARANCES ARE OBSTRUCTED.

MECHANICAL DEMOLITION NOTES

MECHANICAL DEMOLITION DRAWINGS SHOWING EXISTING CONDITIONS HAVE BEEN PREPARED BASED ON FIELD OBSERVATION AND ORIGINAL DRAWINGS. ADDITIONAL COMPONENTS MAY EXIST WHICH DO NOT SHOW, AND SUCH ITEMS SHALL BE DEALT WITH IN A MANNER SIMILAR TO THOSE ITEMS WHICH DO SHOW.

CONTRACTOR SHALL THOROUGHLY FAMILIARIZE HIMSELF WITH EXISTING MECHANICAL SYSTEMS WHICH WILL BE AFFECTED BY THE DEMOLITION WORK. CONTRACTOR SHALL OBTAIN PERMISSION FROM OWNER'S REPRESENTATIVE TO SHUT OFF SERVICES OR SYSTEMS WHICH MAY AFFECT OTHER AREAS BEYOND THE LIMITS OF THE IMMEDIATE DEMOLITION AREA. SUCH PERMISSION WILL BE GRANTED ONLY AFTER OWNER'S REPRESENTATIVE IS INFORMED OF THE REASON FOR AND DURATION OF THE SHUTDOWN AND IS SATISFIED THAT THE SHUTDOWN CAN BE MADE WITH AS LITTLE INCONVENIENCE TO OTHER AREAS AS POSSIBLE.

PIPING SHOWN ON PLANS SHALL BE REMOVED UNLESS NOTED OTHERWISE. REMOVAL SHALL BE DONE IN A TIMELY MANNER IN ACCORDANCE WITH THE GENERAL DEMOLITION WORK. COORDINATE WITH THE OWNER AND OTHER CONTRACTORS.

MECHANICAL WARRANTY NOTES

MECHANICAL CONTRACTOR SHALL WARRANT ALL EQUIPMENT AND INSTALLATION FOR A MINIMUM OF 1 YEAR FROM THE DATE OF SUBSTANTIAL COMPLETION. ALL DEFECTS THAT BECOME APPARENT WITHIN THE WARRANTY PERIOD SHALL BE REPAIRED BY THE MECHANICAL CONTRACTOR AS DIRECTED BY THE ENGINEER THROUGH THE OWNERS REPRESENTATIVE. WARRANTY WILL NOT OBLIGATE THE MECHANICAL CONTRACTOR TO REPAIR DAMAGE RESULTING FROM ACCIDENT OR IMPROPER OPERATION OF CARE ON THE PART OF THE OWNER AND NOT DUE TO DEFECTIVE MATERIAL. REFER TO SPECIFICATIONS FOR ADDITIONAL DETAILS AND OTHER WARRANTY INFORMATION.

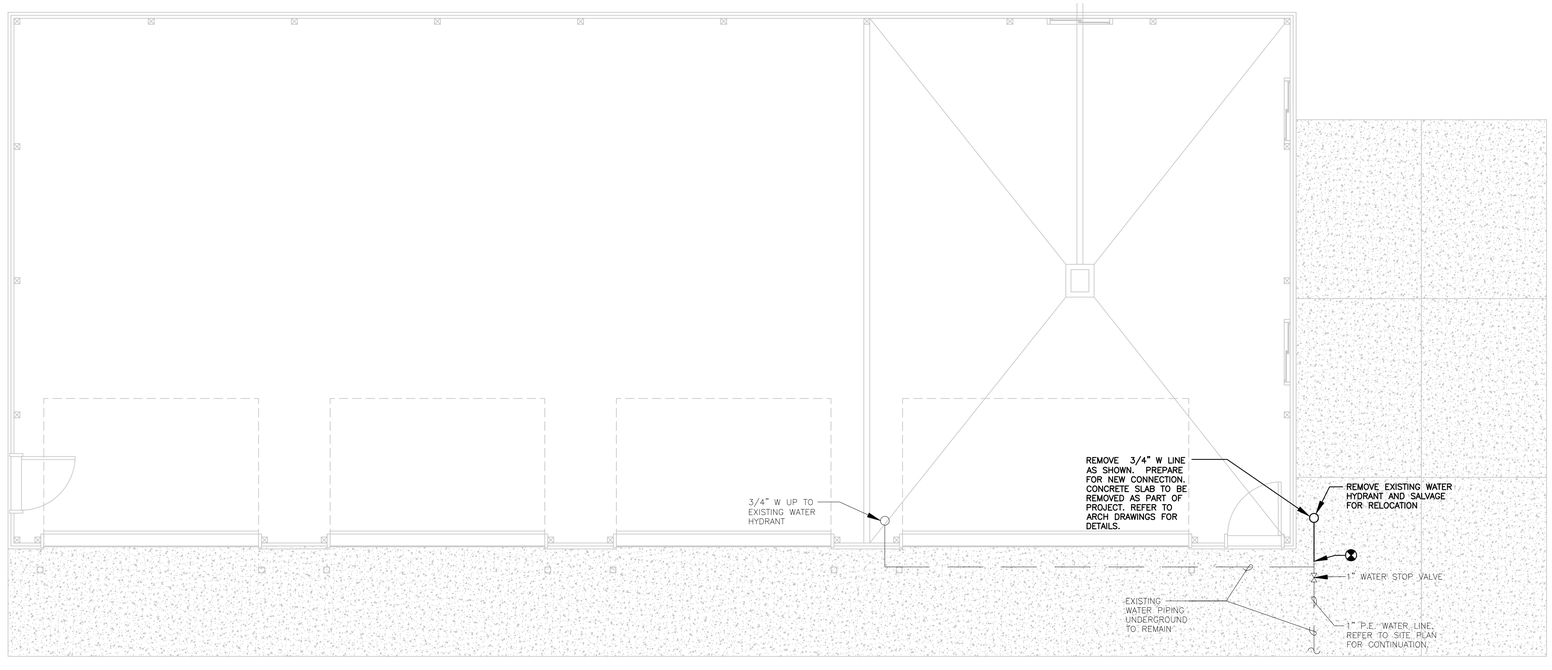

N

MECH DEMOLITION PLAN

SCALE: 1/4" = 1'-0"

CONSULTANT:
KCL Engineering
2829 Westown Parkway
Suite 220
West Des Moines, Iowa 50266
info@kclengineering.com
515.724.7938

IOWA DEPARTMENT OF NATURAL RESOURCES
ENGINEERING SERVICES - WALLACE BUILING
502 E. 9TH ST., DES MOINES, IA 50319-0034
P: 515.281.5918
F: 515.281.8685

MECHANICAL DEMO FLOOR PLAN

SHOP ADDITION FOR:
COLYN WMA:

LUCAS COUNTY, IOWA

28248 415TH ST., RUSSELL

NO.	BY DATE	REVISION

DRAWN BY: CDB	PROJECT NUMBER: 13-05-59-01
CHK'D BY: MTL	DATE: 05.29.2013

SHEET No: MD1.0

UNIT HEATERS SCHEDULE - GAS FIRED

REFERENCE	UH-1	UH-2
MANUFACTURER	REZNOR	REZNOR
MODEL #	UDAS-30	UDAS-30
TYPE	LOW STATIC PROPELLER	LOW STATIC PROPELLER
SERVES	ADDITION	ADDITION
CFM	450	450
FUEL TYPE	PROPANE	PROPANE
INPUT (MBH)	30.0	30.0
OUTPUT (MBH)	24.6	24.6
EFFICIENCY	82%	82%
VOLTAGE/PH	120/1	120/1
AMPS (FLA)	1.9	1.9
MOCP	15	15
NOTES	1,2,3	1,2,3

NOTES:
1. PROVIDE UNIT WITH THERMOSTAT AND DISCONNECT. MOUNT THERMOSTAT ON WALL, EXTEND 24V POWER AND CONDUIT TO HEATER.
2. REFER TO DRAWINGS FOR ROUTING OF COMBUSTION AIR AND FLUE PIPING. SIZE AND TERMINATE PER MFR RECOMMENDATIONS.
3. PROVIDE UNIT WITH CONCENTRIC WALL TERMINATION KIT.

PLUMBING FIXTURE SCHEDULE

REFERENCE	MFR	MODEL	DESCRIPTION	TRIM
FD-1	WATTS	FD-100-K	CAST IRON BODY FLOOR DRAIN, ADJUSTABLE 5" ROUND NICKEL BRONZE DOME STRAINER. OUTLET SIZE AS NOTED ON DRAWINGS.	NA
H-1	WOODFORD	24	WALL HYDRANT, BRASS VALVE BODY AND SEAT, STANDARD FINISH, NON-FERROUS METAL STEM, AUTOMATIC DRAINING, ANTI-SIPHON VACUUM BREAKER, 3/4" MALE HOSE THREAD, WALL CLAMP, ASSE 1019 APPROVED AND LISTED. INSTALL AT 18" ABOVE FINISH FLOOR.	NA

GENERAL NOTES
1. REFER TO MD1.0 FOR GENERAL NOTES.
2. NEW CONCRETE SLAB WILL BE PROVIDED WHERE NEW WATER PIPING IS INSTALLED. REFER TO ARCH DRAWINGS FOR DETAILS.
3. PROVIDE ADEQUATE HANGERS/SUPPORTS FOR ALL PIPING INCLUDING C.A./FLUE PIPING FOR UNIT HEATERS.
4. SUPPORT UNIT HEATERS PER MFR'S RECOMMENDATIONS.

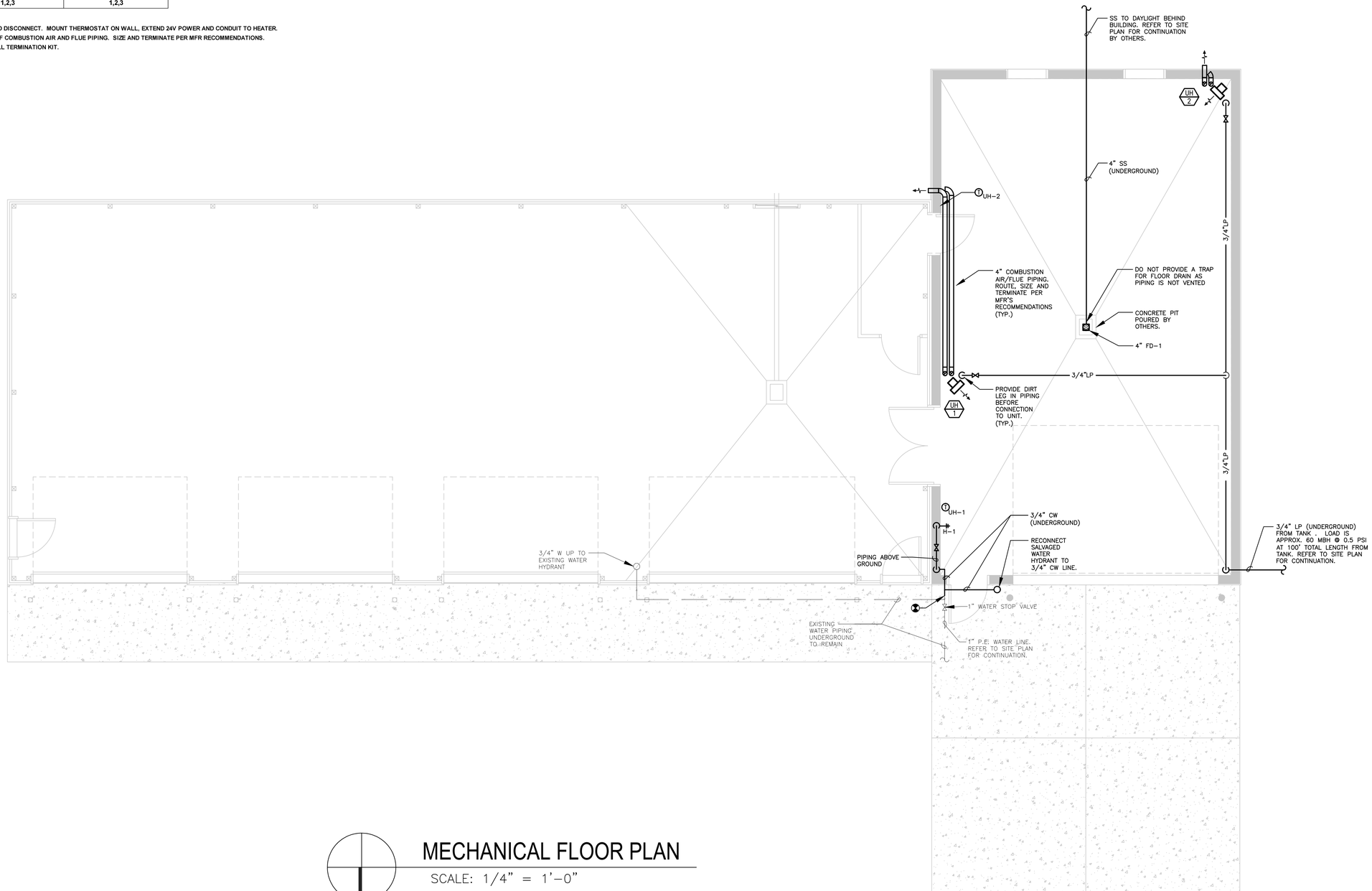

N

MECHANICAL FLOOR PLAN

SCALE: 1/4" = 1'-0"

CONSULTANT:
KCL Engineering
2829 Westown Parkway
Suite 220
West Des Moines, Iowa 50266
info@kclengineering.com
515.724.7938

IOWA DEPARTMENT OF NATURAL RESOURCES
ENGINEERING SERVICES - WALLACE BUILING
502 E. 9TH ST., DES MOINES, IA 50319-0034
P: 515.281.5918
F: 515.281.8685

MECHANICAL FLOOR PLAN

SHOP ADDITION FOR:
COLYN WMA:

LUCAS COUNTY, IOWA

28248 415TH ST., RUSSELL

NO.	BY / DATE	REVISION

DRAWN BY:	PROJECT NUMBER:
CDB	13-05-59-01
CHK'D BY:	DATE:
MTL	05.29.2013

SHEET No:
M1.0

ELECTRICAL SYMBOLS

F1	FLUORESCENT STRIP FIXTURE
F1	PENDANT MOUNTED FLUORESCENT FIXTURE
L1	BRACKET FIXTURE – HEIGHT AS NOTED
	DUPLEX RECEPTACLE, +18" OR AS NOTED
	SINGLE RECEPTACLE, +18" OR AS NOTED
GF	DUPLEX GROUND FAULT RECEPTACLE, +18" OR AS NOTED
WP	DUPLEX GROUND FAULT RECEPTACLE WITH WEATHERPROOF COVER, +24" OR AS NOTED
A	SPECIAL OUTLET AS NOTED, +18" OR AS NOTED
	LIGHTING AND POWER PANEL – FLUSH MOUNTED
	EXPOSED CONDUIT
	CONDUIT CONCEALED IN CEILING OR WALL CONSTRUCTION
S	SINGLE POLE SWITCH, +48" OR AS NOTED
3	NOTE REFERENCE
OC	OCCUPANCY SENSOR, WALL MOUNTED. +48" OR AS NOTED
	EQUIPMENT CONNECTION AS NOTED

ELECTRICAL GENERAL NOTES

1. THE ENTIRE PROJECT SHALL COMPLY WITH THE CURRENT ISSUE OF THE NATIONAL ELECTRIC CODE (NEC), INCLUDING AMENDMENTS, AND WITH ALL STATE, LOCAL, AND OTHER CODES AS APPLICABLE. THE CURRENT ISSUE SHALL BE THE ISSUE THAT IS IN EFFECT WHEN THE CONSTRUCTION PERMITS ARE SECURED FOR THE WORK. THE INTERPRETATIONS AND DECISIONS OF THE AUTHORITY HAVING JURISDICTION OF APPLICABLE CODES SHALL GOVERN.
2. THIS CONTRACTOR SHALL BE RESPONSIBLE FOR OBTAINING ALL REQUIRED STATE AND LOCAL PERMITS AND ASSOCIATED FEES.
3. NOTE THAT THE ELECTRICAL DRAWINGS ARE ONLY A PORTION OF THE COMPLETE SET OF PLANS. THE COMPLETE SET OF PLANS SHALL BE USED TO DEFINE THE ELECTRICAL WORK. THIS SHALL INCLUDE, BUT NOT BE LIMITED TO, USING THE ARCHITECTURAL PLANS FOR DIMENSIONS AND DETAILS; EQUIPMENT PLANS FOR ROUGH–IN REQUIREMENTS, AND THE MECHANICAL PLANS FOR EQUIPMENT SIZES AND LOCATIONS. COORDINATE ALL WIRING DEVICE LOCATIONS AND ELEVATIONS INDICATED ON PLANS WITH THE OWNER, ARCHITECT AND FINAL FURNITURE/EQUIPMENT LAYOUTS.
4. COORDINATE LOCATION/INSTALLATION OF MECHANICAL AND ELECTRICAL WORK WITH ALL OTHER TRADES. NO ASPECT OF A SYSTEM INSTALLATION OR ITS ROUGH–IN SHALL COMMENCE UNTIL PROPER AND TIMELY COORDINATION WITH ALL TRADES ASSOCIATED WITH THE INSTALLATION HAS TRANSPIRED. ITEMS TO BE COORDINATED SHALL INCLUDE BUT NOT BE LIMITED TO: BUILDING STRUCTURE, SHEET METAL, ALL PIPING SYSTEMS, LIGHT FIXTURES, CONDUITS, CABLE TRAYS, ETC. REFER TO ALL GENERAL, MECHANICAL, AND ELECTRICAL DRAWINGS AND SPECIFICATIONS FOR THIS PROJECT.
5. RACEWAYS AND BOXES ARE SHOWN DIAGRAMMATICALLY ONLY AND INDICATE THE GENERAL AND APPROXIMATE LOCATION. THE LAYOUT DOES NOT SHOW THE TOTAL NUMBER OF RACEWAYS OR BOXES FOR THE CIRCUITS REQUIRED, NOR ARE THE LOCATIONS OF INDICATED RUNS INTENDED TO SHOW THE ACTUAL ROUTING OF THE RACEWAYS.
6. ALL CONDUCTOR SIZES ARE BASED ON COPPER UNLESS OTHERWISE NOTED.
7. SUPPORT ALL CONDUITS FROM STRUCTURAL SLABS, WALLS, STRUCTURAL MEMBERS AND ROOF JOISTS. DO NOT SUPPORT CONDUITS FROM CEILING TIE WIRES, DUCTWORK, PIPING OR OTHER NONSTRUCTURAL MEMBERS.

KEYED NOTES:

1. MOUNT ABOVE DOOR. MATCH HEIGHT OF EXISTING EXTERIOR FIXTURES.
2. CONNECT NEW EXTERIOR LIGHT FIXTURES TO EXISTING EXTERIOR LIGHTING CIRCUIT USING #12 CONDUCTORS.
3. GARAGE DOOR SAFETY SENSORS PROVIDED BY DOOR MANUFACTURER, INSTALLED BY E.C. INSTALL WIRING IN 1/2 CONDUIT.
4. DOOR OPENER SWITCH PROVIDED BY DOOR MANUFACTURER, INSTALLED BY E.C.
5. CONNECT TO NEW 20A/1P CIRCUIT BREAKER IN EXISTING LOAD CENTER USING #12 CONDUCTORS IN 3/4" CONDUIT.
6. CONNECT TO NEW 20A/2P CIRCUIT BREAKER IN EXISTING LOAD CENTER USING #12 CONDUCTORS IN 3/4" CONDUIT.
7. RELOCATE LIGHTING CONTROL PHOTOCELL TO NEW LOCATION AND RECONNECT TO EXISTING EXTERIOR LIGHTING CIRCUIT.

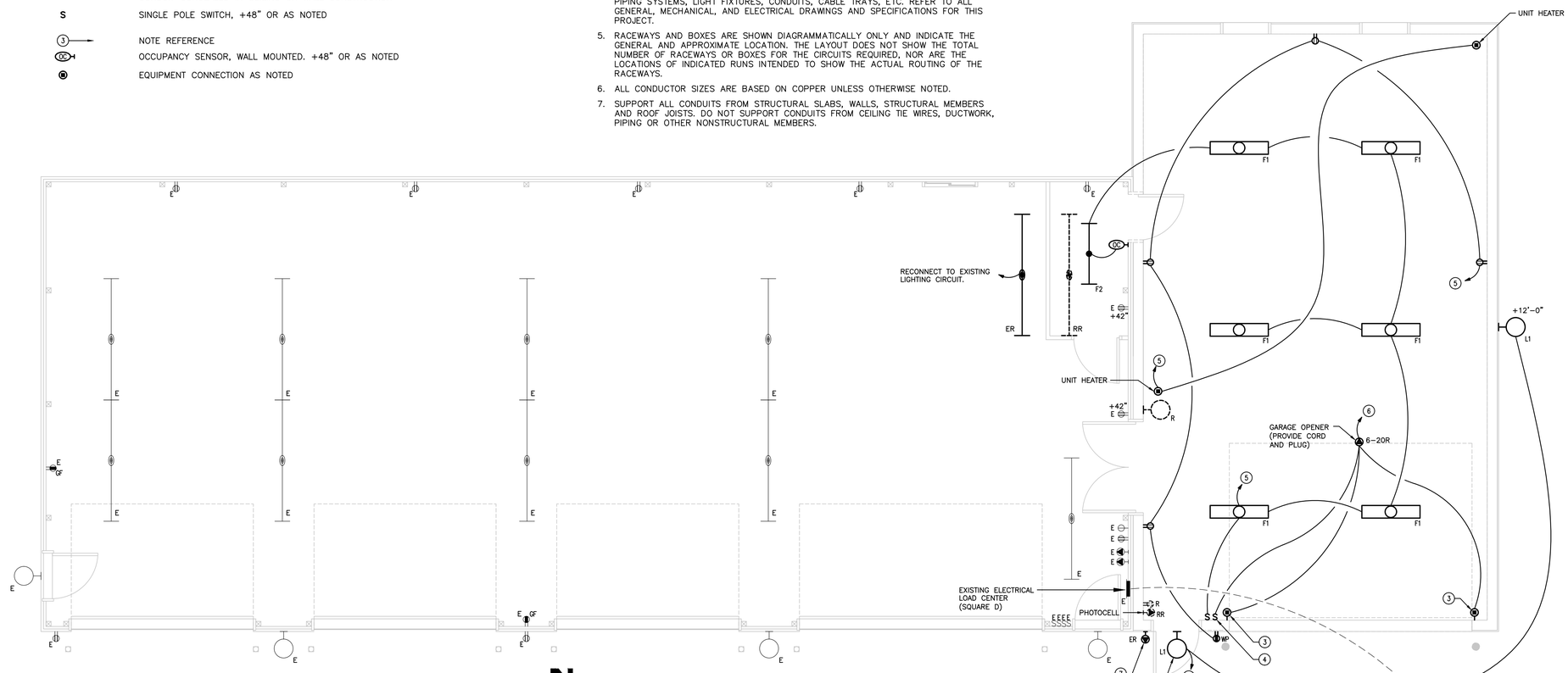

N

ELECTRICAL FLOOR PLAN

SCALE: 1/4" = 1'-0"

ELECTRICAL ABBREVIATIONS

	EXISTING ITEM TO REMAIN	N	NEW DEVICE IN EXISTING LOCATION
ER	NEW LOCATION OF EXISTING ITEM	R	EXISTING ITEM TO BE REMOVED
GF	GROUND FAULT CIRCUIT INTERRUPTER	RR	EXISTING ITEM TO BE REMOVED AND RELOCATED
		WF	WEATHERPROOF DEVICE

LIGHT FIXTURE SCHEDULE

FIXTURE TYPE	DESCRIPTION	MANUFACTURER	CATALOG NUMBER	LAMP TYPE	LAMP QTY	BALLAST TYPE	FIXTURE LOAD	FIXTURE VOLTS	APPROVED EQUALS
F1	GENERAL-PURPOSE INDUSTRIAL FIXTURE. CHANNEL CONSTRUCTED OF DIE-FORMED COLD ROLLED STEEL. PAINT FINISH WITH CORROSION-RESISTANCE. REFLECTOR AND CHANNEL FINISHED WITH A HIGH-GLOSS BAKED WHITE ENAMEL. (2) T8 4,100K LAMPS AND (1) MVOLT BALLAST AT FACTOR OF 0.88.	LITHONIA	L-2-32-MVOLT-GEB10IS	T8 FLUORESCENT	2	GEB10IS	58	120/277	COOPER, DAY-BRITE, WILLIAMS OR AS APPROVED BY ENGINEER
F2	GENERAL-PURPOSE STRIP FIXTURE. HOUSING DIE-FORMED FROM CODE-GAUGE STEEL. PAINT FINISH WITH CORROSION-RESISTANCE. REFLECTOR AND CHANNEL FINISHED WITH A HIGH-GLOSS BAKED WHITE ENAMEL. (2) T8 4,100K LAMPS AND (1) MVOLT BALLAST AT FACTOR OF 0.88. WIRE GUARD.	LITHONIA	C-2-32-MVOLT-GEB10IS-WGCUN NST	T8 FLUORESCENT	2	GEB10IS	58	120/277	COOPER, DAY-BRITE, WILLIAMS, OR AS APPROVED BY ENGINEER
L1	CAST-ALUMINUM HOUSING WITH REMOVABLE DOOR AND BACK BOX. BRONZER FINISH. INTEGRAL PHOTOCELL. LEDS DRIVEN AT 900MA WITH OUPUT OF 1432 LUMENS AND CCT OF 5,000K. 5-YEAR WARRANTY.	COOPER	XTOR2A-PC1	LED	FACTORY PROVIDED	N/A	21	120	AS APPROVED BY ENGINEER

CONSULTANT:
KCL Engineering
2829 Westown Parkway
Suite 220
West Des Moines, Iowa 50266
info@kclengineering.com
515.724.7938

IOWA DEPARTMENT OF NATURAL RESOURCES

ENGINEERING SERVICES - WALLACE BUILING
502 E. 9TH ST., DES MOINES, IA 50319-0034
P: 515.281.5918
F: 515.281.8685

ELECTRICAL FLOOR PLAN

SHOP ADDITION FOR:
COLYN WMA:

LUCAS COUNTY, IOWA

28248 415TH ST., RUSSELL

NO.	BY DATE	REVISION

DRAWN BY:
PROJECT NUMBER: 13-05-59-01
CHK'D BY:
DATE: 05.29.2013
SHEET No: E1.0