PROJECT LOCATION

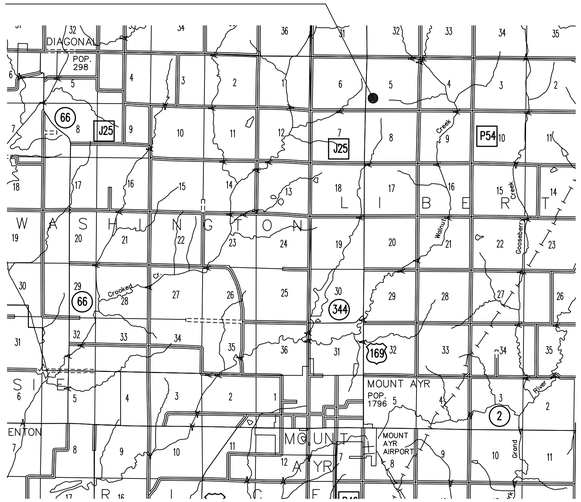

VICINITY MAP

IOWA DEPARTMENT OF NATURAL RESOURCES

CONSTRUCTION DOCUMENTS FOR MT AYR FISH HATCHERY BUILDING ADDITION RINGGOLD COUNTY, IOWA

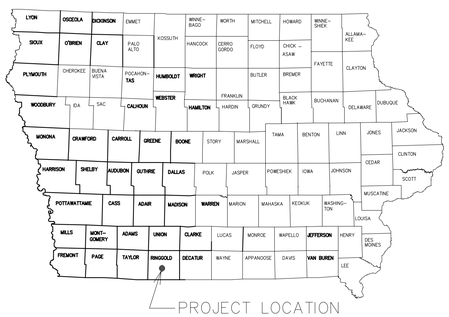

PROJECT LOCATION

LOCATION MAP

IOWA ONE CALL
800/292-8989
TOLL FREE
CALL - BEFORE - YOU DIG

PROJECT # 13-04-80-02

PLANS PREPARED BY
ENGINEERING BUREAU
MANAGEMENT SERVICES DIVISION

REGISTERED PROFESSIONAL ARCHITECT
RYAN E. RICHEY
06461
IOWA

I hereby certify that this architectural document was prepared by me or under my direct personal supervision and that I am a duly Registered Professional Architect under the laws of the State of Iowa.

Ryan E. Richey — Date

My license renewal date is June 30, 2013.

Pages or sheets covered by this seal:

LICENSED PROFESSIONAL ENGINEER
BRIAN J. BIRKLAND
17375
IOWA

I hereby certify that this engineering document was prepared by me or under my direct personal supervision and that I am a duly Licensed Professional Engineer under the laws of the State of Iowa.

BRIAN J. BIRKLAND — DATE

My license renewal date is DECEMBER 31, 2014.

Pages or sheets covered by this seal:

C-1 - C-3

SHEET INDEX

SHEET. NO.	SHEET TITLE
	ARCHITECTURAL
A-001	COVER SHEET
A-002	WALL TYPES, NOTES & SYMBOLS
	CIVIL
C-1	SITE PLAN
C-2	GEOMETRIC PLAN
C-3	GEOMETRIC PLAN - ALTERNATE #1
	ARCHITECTURAL
A-010	ARCHITECTURAL SITE PLAN
A-011	DEMO PLAN & WALL SECTION
A-012	DEMO ELEVATIONS
A-020	LIFE SAFETY PLAN
A-100	REFERENCE FLOOR PLAN
A-101	DIMENSION PLAN & DETAIL DRAWINGS
A-110	REFLECTED CEILING PLAN
A-200	BUILDING ELEVATIONS
A-300	BUILDING SECTIONS
A-301	WALL SECTIONS & DETAILS
A-600	FINISH, DOOR & WINDOW SCHEDULES

DIRECTORY

OWNER			
COMPANY	IOWA DEPARTMENT OF NATURAL RESOURCES	COMPANY	-
ADDRESS	502 E. 9TH. ST.	ADDRESS	-
CITY,STATE,ZIP	DES MOINES, IA 50319	CITY,STATE,ZIP	-
CONTACT	N/A	CONTACT	-
TELEPHONE	515.281.5918	TELEPHONE	-
FAX	515.281.6794	FAX	-
EMAIL	N/A	EMAIL	-
ARCHITECT			
COMPANY	IOWA DEPARTMENT OF NATURAL RESOURCES	COMPANY	-
ADDRESS	502 E. 9TH. ST.	ADDRESS	-
CITY,STATE,ZIP	DES MOINES, IA 50319	CITY,STATE,ZIP	-
CONTACT	RYAN RICHEY	CONTACT	-
TELEPHONE	515.979.0107	TELEPHONE	-
FAX	515.281.8685	FAX	-
EMAIL	RYAN.RICHEY@DNR.IOWA.GOV	EMAIL	-
CIVIL ENGINEER			
COMPANY	WHKS ENGINEERS	COMPANY	-
ADDRESS	1421 SOUTH BELL AVENUE, SUITE 103	ADDRESS	-
CITY,STATE,ZIP	AMES, IA 50010	CITY,STATE,ZIP	-
CONTACT	BRIAN BIRKLAND	CONTACT	-
TELEPHONE	515-663-9997	TELEPHONE	-
FAX	-	FAX	-
EMAIL	BBIRKLAND@WHKS.COM	EMAIL	-
COMPANY	-	COMPANY	-
ADDRESS	-	ADDRESS	-
CITY,STATE,ZIP	-	CITY,STATE,ZIP	-
CONTACT	-	CONTACT	-
TELEPHONE	-	TELEPHONE	-
FAX	-	FAX	-
EMAIL	-	EMAIL	-

PROJECT DATA

OCCUPANT LOAD:

GROUP S - STORAGE
BUSINESS AREAS - 300 GROSS (I.B.C. TABLE 1004.1.1)
896 S.F. / 300 = 3 = 3 OCCUPANTS

MEANS OF EGRESS:

MIN. REQ'D # OF EXITS = 2 EXITS PER LEVEL (IBC TABLE 1021.1)
MAX TRAVEL DISTANCE = 200' (IBC 1016.1)
DEAD-END CORRIDOR = 20' MAX. (IBC 1018.4)
MIN. CORRIDOR WIDTH = 36" CLEAR
MIN. CLEAR OPENINGS FOR EXIT DOORS = 32" (ACTUAL 34")

FIRE EXTINGUISHERS:
THE NUMBER AND LOCATIONS OF FIRE EXTINGUISHERS TO BE DETERMINED BY THE FIRE MARSHAL PRIOR TO CERTIFICATE OF OCCUPANCY.

BUILDING DATA

BUILDING:

ADDRESS: 2093 E LOCH AYR ROAD
MT. AYR, IA 50854
(641) 464-3108
USE - FEED STORAGE
BUILDING CONSTRUCTION - TYPE V-B
W/OUT AUTOMATIC SPRINKLER SYSTEM
NUMBER OF STORIES - 1 STORIES
BUILDING HEIGHT - 15'-0"
BUILDING AREA -1,800 GSF
BUILDING OCCUPANCY - GROUP-B & S, BUSINESS / STORAGE

BUILDING CODES

BUILDING CODE - 2009 INTERNATIONAL BUILDING CODE
STRUCTURAL CODE -2009 INTERNATIONAL BUILDING CODE
PLUMBING CODE - 2009 INTERNATIONAL BUILDING CODE
MECHANICAL CODE - 2009 INTERNATIONAL BUILDING CODE
ELECTRICAL CODE - 2009 INTERNATIONAL BUILDING CODE
FIRE PREVENTION CODE - 2009 INTERNATIONAL FIRE PREVENTION CODE
ACCESSIBILITY CODE - 2009 INTERNATIONAL BUILDING CODE, CHAPTER 11
ENERGY CODE - 2009 INTERNATIONAL ENERGY EFFICIENCY CODE

PROJECT DESCRIPTION

MT. AYR FISH HATCHERY NEEDS TO ADD A 28'-0" X 32'-0" ADDITION TO ITS OFFICE / SHOP AREA. THIS ADDTION WILL HAVE ONE GARAGE DOOR AND AN EGRESS DOOR. IT WILL BE A COLD STORAGE BAY AND WILL HAVE MINIMAL LIGHTING. THERE WILL BE FIVE (5) ALTERNATES, #1: DEMO AND REPLACE THE ENTIRE PARKING LOT AREA AS SHOWN ON THE CIVIL PLANS, #2: RECONSTRUCT THE LOADING DOCK AREA AS SHOWN ON THE CIVIL PLANS, #3: REMOVE ROOF AND REPLACE WITH LIKE SHINGLES, #4 REMOVE AND REPLACE EXISTING OVERHEAD GARAGE DOORS AND #5: INSTALL NEW CONCRETE BOLLARDS AS SHOWN ON SHEET A-010.

AUTHORIZATION TO BID

AUTHORIZATION - PARKS | WILDLIFE | FISHERIES | LAW ENFORCEMENT | FORESTRY — DATE

ENGINEERING BUREAU CHIEF — DATE

CONSULTANT:

IOWA DEPARTMENT OF NATURAL RESOURCES
ENGINEERING SERVICES - WALLACE BUILING
502 E. 9TH ST., DES MOINES, IA 50319-0034
P: 515.281.5918
F: 515.281.8685

COVER SHEET

BUILDING ADDITION AND IMPROVEMENT FOR:
MT. AYR FISH HATCHERY

RINGGOLD COUNTY, IOWA

MT AYR FISHERIES BUILDING

NO.	BY: DATE	REVISION

DRAWN BY: JL
PROJECT NUMBER: 13-04-80-02
CHK'D BY: RR
DATE: 01.30.2013
SHEET No: A-001

DIMENSION NOTES

1. IN INTERIOR SPACES THE ACTUAL DIMENSIONS MAY BE LESS IMPORTANT THAN IF AT TWO ELEMENTS IN THE BUILDING WERE TO BE EQUAL. IN THESE CASES, THE WORD "EQUAL OR EQ" IS USED IN LIEU OF THE ACTUAL DIMENSIONS.
2. WHEN A ROOM CENTERLINE IS INDICATED ONLY ONE SIDE OF THE ROOMS ELEMENTS MAY BE DIMENSIONED.
3. COLUMN IDENTIFICATION: DETAILS WILL GOVERN ALL DIMENSIONS AND NO DIMENSIONS WILL BE SHOWN ON SMALL SCALE PLANS.
4. PARTITION CENTERED ON COLUMN OR GRID LINES WILL NOT BE DIMENSIONED ON SMALL SCALE PLANS.
5. PARTITION WITH A FINISHED FACE FLUSH WITH FINISH FACE OF COLUMN WILL NOT be DIMENSIONED ON SMALL SCALE PLANS.
6. PARTITION FINISH FACE ON COLUMN OR GRID LINE WILL NOT BE DIMENSIONED ON SMALL SCALE PLANS .
7. WHEN ONE JAMB OCCURS AT A COLUMN OR GRID LINE NO DIMENSIONS WILL BE SHOWN ON THE SMALL SCALE PLANS. THE OPENING WIDTH WILL BE GOVERNED BY CRITERIA OR SCHEDULES.
8. WHEN NEITHER JAMB OCCURS AT A COLUMN OR GRID LINE ONE JAMB WILL BE DIMENSIONED.
9. DOOR LOCATIONS ARE TO BE LOCATED BY ONE OF FOLLOWING:
   a. ONE JAMB FACE LOCATED BY A PARTITION AT RIGHT ANGLE. 4"TYPICAL UNLESS INDICATED ON PLAN.
   b. OR AS DIMENSIONED ON PLAN.
10. PARTITIONS ARE DIMENSIONED TO FACE OF CMU OR FACE OF STUD UNLESS OTHERWISE NOTED.
11. DIMENSIONS ARE INDICATED IN THE DOCUMENTS. THE DRAWINGS SHALL NOT BE SCALED FOR DIMENSIONS.

MATERIAL LEGEND

EARTH
COMPACTED EARTH
GRASS
GRAVEL
clay
fence
turf block
pavers
CONCRETE MASONRY UNIT
metal stud
PARTICLE BOARD
PLYWOOD
BATT INSULATION
ACOUSTICAL CEILING TILE
plastic
carpet
GYPSUM / STUCCO
grout
sand
foam INSULATION
RIGID INSULATION
ALUMINUM
STEEL
FINISHED WOOD
brick
CONCRETE
ASPHALT
cast stone
stone
glass
WOOD BLOCKING
CONTINUOUS WOOd

SYMBOL LEGEND

NORTH AAROW
00 TITLE SCALE: 0 = 0'-0" — DRAWING / DETAIL IDENTIFICATION
00 A-000 — SECTION REFERENCE
00 A-000 — DETAIL REFERENCE
00 A-000 — EXTERIOR ELEVATION
00/A-100 — INTERIOR ELEVATION
ELEVATION : 0'-0" DESCRIPTION1 — ELEVATION TARGET
1 A — COLUMN GRID
00 A-000 / 00 A-000 — MATCH LINES
ROOM 000 — ROOM/SPACE IDENTIFICATION
100 — DOOR TAG
00 — WINDOW TAG
00 — WALL TYPE REFERENCE
00 — KEYNOTE NUMBER -NEW C.S.I. DIVISION/KEY
00 — KEYNOTE - DEMOLITION
00 — KEYNOTE - NEW/RENOVATION
00 — KEYNOTE - FINISH/ACCESSORY
℄ — PROPERTY LINE REFERENCE
℄ — CENTER LINE REFERENCE
0" — LEVEL CHANGE REFERENCE
DETAIL CUT LINE
1 — REVISION NUMBER AND CLOUD

GENERAL NOTES

THE FOLLOWING GENERAL NOTES SHALL PERTAIN TO THE ENTIRE SET OF CONTRACT DOCUMENTS

1. A GENERAL CONTRACTOR SHALL NOTE THAT THE ARCHITECTURAL DRAWINGS ARE ESTABLISHING A MINIMUM MATERIAL OR CONSTRUCTION METHOD STANDARD. THE GENERAL CONTRACTOR SHALL PROVIDE A BID PRICE BASED ON THE SPECIFIC MATERIALS NOTED.
2. DO NOT SCALE DRAWINGS. IF DIMENSIONS ARE IN QUESTION, THE CONTRACTOR SHALL BE RESPONSIBLE FOR OBTAINING CLARIFICATION FROM THE ARCHITECT BEFORE CONTINUING WITH CONSTRUCTION.
3. GENERAL CONTRACTOR AND SUBCONTRACTORS SHALL PERFORM THEIR WORK IN ACCORDANCE WITH ALL APPLICABLE CODES GOVERNING EACH TRADE.
4. THE CONTRACTOR SHALL MAINTAIN A CLEAN AND ORGANIZED JOB SITE, ACCEPTABLE TO THE OWNER.
5. THE CONTRACTOR SHALL COORDINATE THE SEQUENCE OF WORK WITH THE OWNER REPRESENTATIVE.
6. THERE SHALL BE NO DEVIATION BY THE GENERAL CONTRACTOR FROM THE CONSTRUCTION DOCUMENTS UNLESS APPROVED IN WRITING BY THE ARCHITECT.
7. EACH CONTRACTOR SHALL VERIFY EXISTING CONDITIONS IN THE FIELD PRIOR TO THE INITIATION OF WORK AND SHALL NOTIFY THE ARCHITECT OF ANY DISCREPANCIES OR CONDITIONS INTERFERING WITH THE ABILITY OF THE CONTRACTOR TO COMPLETE WORK AS OUTLINED ON THE CONSTRUCTION DRAWINGS.
8. ALL CONTRACTORS ARE REQUIRED TO COORDINATE THEIR WORK WITH OTHER TRADES. LACK OF THIS COORDINATION RESULTING IN ADDED COST TO THE CONTRACT WILL BE BORNE BY THE CONTRACTOR.
9. GENERAL CONTRACTOR SHALL BE RESPONSIBLE FOR KEEPING THE EXISTING BUILDING WATER TIGHT DURING CONSTRUCTION.
10. THE CONTRACTOR WILL VERIFY THAT EXIT EGRESS IS MAINTAINED FOR ALL OCCUPIED AREAS OF THE BUILDING THROUGHOUT ALL PHASES OF CONSTRUCTION.
11. PLAN DIMENSIONS ARE GIVEN TO FACE OF STUD OR BLOCK WALL. "CLEAR" DIMENSIONS ARE GIVEN TO THE FACE
12. THE OWNER WILL ASSUME ALL LIABILITY AND SHALL TAKE PERSONAL RESPONSIBILITY FOR ANY DECISIONS THAT THEY MAKE TO CHANGE OR ALTER THE CONSTRUCTION DOCUMENTS WITHOUT THE ARCHITECT'S WRITTEN APPROVAL.
13. PROTECT ALL EXISTING FINISHES AND MATERIALS TO REMAIN, IN ACCORDANCE WITH ACCEPTABLE TRADE PRACTICES, MANUFACTURER, RECOMMENDATIONS, OR AS DIRECTED BY THE ARCHITECT.
14. CUTTING OF EXISTING CONSTRUCTION FOR THE INSTALLATION OF ALL NEW WORK BY ALL TRADES, AND THE SUBSEQUENT PATCHING THEREOF, SHALL BE THE RESPONSIBILITY OF THE GENERAL CONTRACTOR, WHETHER THE WORK IS DONE BY HIS OWN FORCES OR NOT. GRINDING OF MATERIALS FOR REMOVAL SHALL NOT BE PERMITTED. CUTTING SHALL BE TO STRAIGHT LINE. UNWORKMAN-LIKE CUTTING, DAMAGE RESULTING THEREFROM AND UNACCEPTABLE PATCHING SHALL BE REPAIRED AND/OR REPLACED TO AN ACCEPTABLE CONDITION APPROVED BY THE ARCHITECT. A OWNER PROJECT REPRESENTATIVE SHALL BE NOTIFIED PRIOR TO CUTTING OF ANY STRUCTURAL ITEM (I.E. CONCRETE FLOOR, MASONRY, WALL, ETC.) WITHIN THE EXISTING BUILDING. METHOD OF CUTTING SHALL BE APPROVED BY THE OWNER PROJECT REPRESENTATIVE.
15. PATCHING MATERIAL SHALL MATCH EXISTING ADJACENT MATERIALS AS CLOSELY AS POSSIBLE IN COLOR, PATTERNS, AND/OR TEXTURES.
16. ALL SALVAGE MATERIALS REMOVED SHALL REMAIN THE PROPERTY OF THE OWNER. ALL NON-SALVAGE CONSTRUCTION MATERIALS AND DEBRIS FROM DEMOLITION WORK SHALL BE REMOVED FROM THE SITE AS WORK PROGRESSES, UNLESS OTHERWISE NOTED.
17. ISOLATE ALL DISSIMILAR METALS. G SHALL REQUEST APPROVAL BY THE ARCHITECT FOR MATERIALS USED FOR THIS PURPOSE, PRIOR TO INSTALLATION.
18. SEALANTS SHALL BE COMPATIBLE WITH ADJACENT SURFACE(S) THAT ARE IN CONTACT. REFER TO SPECIFICATIONS FOR APPROVED MANUFACTURERS AND PROCEDURES.
19. CAULK JOINTS OF DISSIMILAR EXPOSED TO VIEW MATERIALS AS REQUIRED BY THE ARCHITECT.
20. ALL DOOR HARDWARE TO BE FL. ADA COMPLIANT.
21. ALL EXTERIOR WALLS, DOORS AND WINDOWS ARE EXISTING U.N.O.
22. ALL FINISHES TO BE PER CLASS INDICATED ON A-004
23. NO CONSTRUCTION SHALL OCCUR WITHOUT SHOP DRAWING APPROVAL. SHOP DRAWINGS TO BE PROVIDED TO ARCHITECT FOR REVIEW UPON BEING REVIEWED AND SIGNED/DATED BY THE GENERAL CONTRACTOR AND SHALL INCLUDE BUT NOT BE LIMITED TO THE FOLLOWING ITEMS:
   - CABINETRY MILLWORK
   - RUNNING TRIM AND CASING PROFILES
   - PAINT/LAMINATE COLOR SAMPLES
   - ACOUSTICAL CEILING AND GRID
   - TOILET ACCESSORIES
   - KITCHEN EQUIPMENT
   - ROOF PENETRATIONS
   - HVAC EQUIPMENT
   - PLUMBING EQUIPMENT AND FIXTURES
   - ELECTRICAL EQUIPMENT AND FIXTURES
24. PRIOR TO COMMENCING WORK, THE CONTRACTOR SHALL SUBMIT (2) COPIES OF MATERIAL SAFETY DATA SHEETS (MSDS) FOR ALL PRODUCTS USED TO PERFORM THE WORK.

ABBREVIATIONS

ABV	ABOVE
AFF	ABOVE FINISH FLOOR
ACT	ACOUSTICAL CEILING TILE
AHU	AIR HANDLER UNIT
AL	ALUMINUM
AB	ANCHOR BOLT
@	AT
BM	BEAM
BRG	BEARING
BLK	BLOCK
BD	BOARD
BTM	BOTTOM
BLDG	BUILDING
BUR	BUILT-UP ROOF
CAB	CABINET
CPT	CARPET
CF	CEILING FINISH
CIP	CAST IN PLACE
CLG	CEILING
CL	CENTER LINE
CT	CERAMIC TILE
CLR	CLEAR
COL	COLUMN
CONC	CONCRETE
CMU	CONCRETE MASONRY UNIT
CONT	CONTINUOUS
CJ	CONTROL JOINT
DIA	DIAMETER
DEMO	DEMOLITION
DR	DOOR
DN	DOWN
DS	DOWNSPOUT
DWG	DRAWINGS
ELEC	ELECTRICAL
EWC	ELECTRIC WATER COOLER
ELEV	ELEVATION
EQ	EQUAL
EXIST	EXISTING
EJ	EXPANSION JOINT
EXT	EXTERIOR
FIN	FINISH
FV	FIELD VERIFY
FE	FIRE EXTINGUISHER
FLR	FLOOR
FD	FLOOR DRAIN
FTG	FOOTING
FR	FIRE RETARDANT
GA	GAUGE
GC	GENERAL CONTRACTOR
GALV	GALVANIZED
GFI	GROUND FAULT INTERRUPT
GYP	GYPSUM
HC	HANDICAPPED
HDW	HARDWARE
HT	HEIGHT
HDR	HEADER
HM	HOLLOW METAL
IC	INSTALLED BY CONTRACTOR
IO	INSTALLED BY OWNER
INSUL	INSULATION
INT	INTERIOR
JAN	JANITOR
JT	JOINT
LAM	LAMINATED
LF	LINEAR FEET
MANUF	MANUFACTURER
MAX	MAXIMUM
MO	MASONRY OPENING
MECH	MECHANICAL
MEMB	MEMBRANE
MTL	METAL
MIN	MINIMUM
N/A	NOT APPLICABLE
NIC	NOT IN CONTRACT
NTS	NOT TO SCALE
#, NO	NUMBER
OA	OVERALL
OC	ON CENTER
OCC	OCCUPANCY
OPNG	OPENING
OPP	OPPOSITE
OH	OVERHANG
PAV	PAVERS
PNT	PAINTED
PR	PAIR
PBO	PURCHASED BY OWNER
PF	PRE-FINISHED/PRIMED
PL	PLATE
PLMB	PLUMBING
PLYWD	PLYWOOD
PT	PRESSURE TREATED
POR	POINT OF REFERENCE
QT	QUARRY TILE
R	RADIUS
RCP	REFLECTED CEILING PLAN
REINF	REINFORCED
RENO	RENOVATION
REQ'D	REQUIRED
RD	ROOF DRAIN
RM	ROOM
RO	ROUGH OPENING
S	STAIN
SECT	SECTION
SIM	SIMILAR
SC	SOLID CORE
ST	STUCCO
SPEC	SPECIFICATION
SF	SQUARE FOOT
SS	STAINLESS STEEL
STL	STEEL
STRUCT	STRUCTURAL
STD	STANDARD
TR	TRUSS
TG	TEMPERED GLASS
TEXT	TEXTURED
TYP	TYPICAL
T&G	TONGUE & GROOVE
T&B	TOP & BOTTOM
UL	UNDERWRITERS LAB
UNO	UNLESS NOTED OTHERWISE
VP	VAPOR BARRIER
VB	VINYL BASE
VCT	VINYL COMPOSITION-TILE
VWC	VINYL WALL COVERING
WC	WATER COOLER
WH	WATER HEATER
WWF	WELDED WIRE FABRIC
WD	WOOD
W/	WITH
W/O	WITHOUT

WALLTYPES

08 NOT USED

07 NOT USED

06 NOT USED

05 NOT USED

WALLTYPES

04 NOT USED

03 NOT USED

02 NOT USED

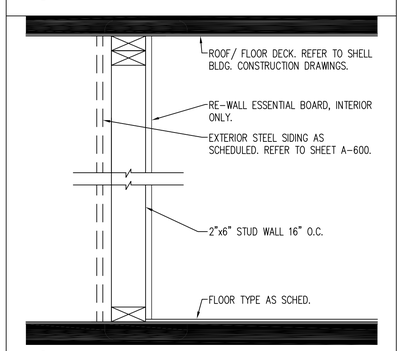

01 NON-RATED/NON-BEARING
3 5/8"" MTL. STUD WALL

CONSULTANT:

IOWA DEPARTMENT OF NATURAL RESOURCES
ENGINEERING SERVICES - WALLACE BUILING
502 E. 9TH ST., DES MOINES, IA 50319-0034
P: 515.281.5918
F: 515.281.8685

WALL TYPES, NOTES & SYMBOLS

BUILDING ADDITIONS AND IMPROVEMENTS FOR:
MT. AYR FISH HATCHERY

RINGGOLD COUNTY, IOWA

MT. AYR FISHERIES BUILDING

NO.	BY / DATE	REVISION

DRAWN BY:	PROJECT NUMBER:
JL	13-04-80-02
CHK'D BY:	DATE:
RR	01.30.2013

SHEET No:
A-002

IOWA ONE CALL
1-800-292-8989
www.iowaonecall.com
811 Know what's below. Call before you dig.

NOTES:

1. ALL SITE WORK SHALL BE IN ACCORDANCE WITH STATEWIDE URBAN STANDARD SPECIFICATIONS FOR PUBLIC IMPROVEMENTS (SUDAS) AND IOWA DOT SPECIFICATIONS WHERE SPECIFIED. THE SUDAS SPECIFICATIONS AND SUDAS FIGURES CAN BE FOUND AT WWW.IOWASUDAS.ORG.
2. EXISTING UNDERGROUND UTILITY INFORMATION SHOWN IS FROM EXISTING RECORDS AND FIELD SURVEY. THE LOCATION OF UTILITIES SHOWN IS NOT GUARANTEED.
3. ALL PAVEMENT TO BE PLACED ON 4" MODIFIED SUBBASE.
4. WEEP HOLES, SUBDRAIN, AND POROUS BACKFILL ARE NOT REQUIRED FOR THE RETAINING WALL LOADING DOCK.
5. ALL REMOVALS SHALL BECOME PROPERTY OF THE CONTRACTOR AND SHALL BE HAULED OFF-SITE.
6. PRESERVE VEGETATION OUTSIDE OF GRADING & SEEDING AREAS. ANY AREAS DISTRUBED BY THE CONTRACTOR SHALL BE RESEEDED ACCORDING TO THE SPECIFICATIONS AT THE CONTRACTORS EXPENSE.
7. MODIFIED SUBBASE SHALL BE PLACED 2 FT OUTSIDE OF PARKING LOT EDGES.
8. ALTERNATE 1 BID ITEM QUANTITIES INCLUDE BASE BID LOCATIONS.
9. ALL SPOT ELEVATIONS ARE TO FINISH GRADE.
10. ON-SITE TOPSOIL SHALL BE TO A DEPTH OF 6 INCHES.
11. SEE C-02 FOR THE GEOMETRIC PLAN OF THE BASE BID.
12. SEE C-03 FOR THE GEOMETRIC PLAN FOR ALTERNATE 1.

N

0 20 40

IOWA STATEWIDE URBAN DESIGN AND SPECIFICATIONS (SUDAS) QUANTITIES AND REFERENCE INFORMATION

SUDAS Section	Title	Unit	Quantity	SUDAS Figure
2010	ON-SITE TOPSOIL (STRIP, SALVAGE, & RESPREAD)	C.Y.	30	
2010	EXCAVATION CLASS 10	L.S.	1	
2010	MODIFIED SUBBASE	TON	28.3	
7010	6" P.C.C. PAVEMENT	S.Y.	120	7010.101
7010	PAVEMENT REMOVAL	S.Y.	193	
9010	CONVENTIONAL SEEDING (URBAN SEEDING)	ACRE	0.1	
9040	12" FILTER SOCK	L.F.	50	9040.2
2010	MODIFIED SUBBASE (ALTERNATE 1)	TON	182.4	
7010	6" P.C.C. PAVEMENT (ALTERNATE 1)	S.Y.	267	
7010	PAVEMENT REMOVAL (ALTERNATE 1)	S.Y.	290	7010.101
9040	12" FILTER SOCK (ALTERNATE 1)	L.F.	200	9040.2
9072	RETAINING WALL AND LANDING (ALTERNATE 2)	L.S.	1	

CONSULTANT:

whks engineers • planners • land surveyors

IOWA DEPARTMENT OF NATURAL RESOURCES
ENGINEERING SERVICES - WALLACE BUILING
502 E. 9TH ST., DES MOINES, IA 50319-0034
P: 515.281.5918
F: 515.281.8685

DNR

SITE PLAN

BUILDING ADDITION FOR:
MOUNT AYR HATCHERY

RINGGOLD COUNTY, IOWA

MOUNT AYR HATCHERY

NO.	BY DATE	REVISION

DRAWN BY: KDN
PROJECT NUMBER: 13-04-87-01
CHK'D BY: BJB
DATE: 01-18-2013
SHEET No: C-01

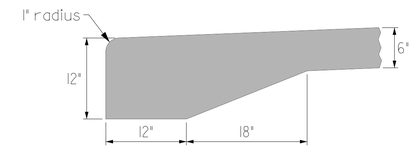

THICKENED EDGE TYPICAL

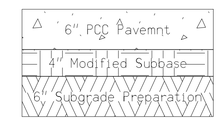

Typical PCC Pavement

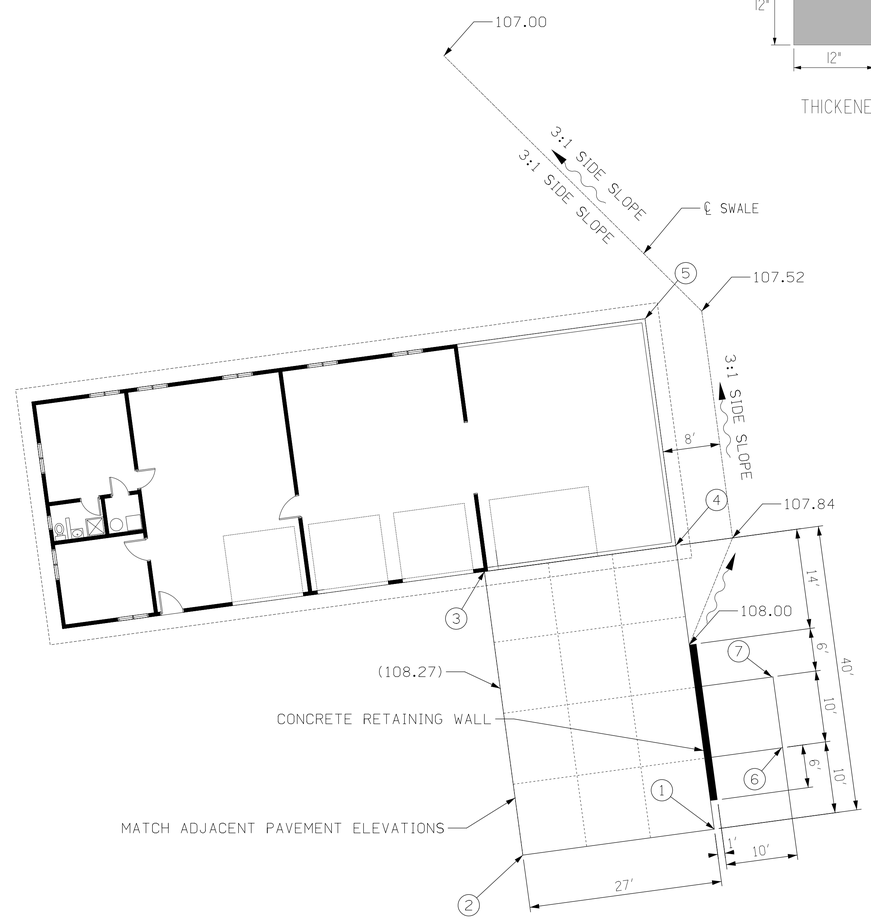

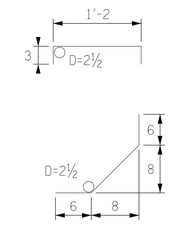

#5 Bent Bar Details

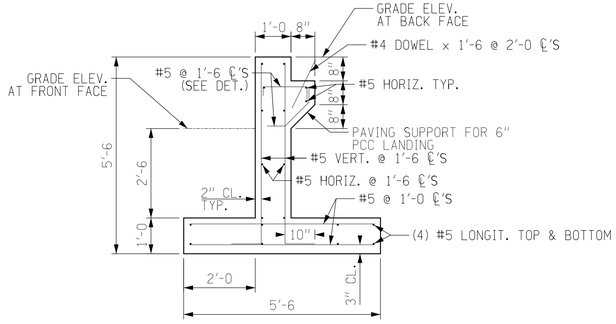

Retaining Wall
Section Thru Center

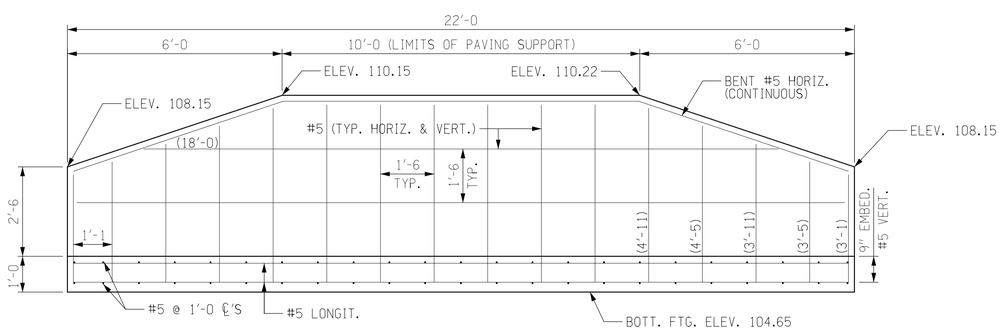

Retaining Wall
Front View

Name	Coordinates			Description
	Y (Northing)	X (Easting)	Z (Elevation)	
1	5,329.646	5,735.876	108.20	PAVEMENT CORNER
2	5,326.017	5,709.121	108.71	PAVEMENT CORNER
3	-	-	108.33	PAVEMENT CORNER
4	-	-	108.33	BUILDING CORNER
5	-	-	108.33	BUILDING CORNER
6	5,341.011	5,745.267	110.22	LANDING CORNER
7	5,350.920	5,743.923	110.15	LANDING CORNER
CP2	5,298.113	5,560.670	102.86	CONTROL POINT
CP6	5,575.784	5,389.349	118.02	CONTROL POINT
CP10	5,297.712	5,835.821	120.16	CONTROL POINT

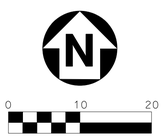

CONSULTANT:

whks
engineers • planners • land surveyors

IOWA DEPARTMENT OF NATURAL RESOURCES

ENGINEERING SERVICES - WALLACE BUILING
502 E. 9TH ST., DES MOINES, IA 50319-0034
P: 515.281.5918
F: 515.281.8685

DNR

GEOMETRIC PLAN

BUILDING ADDITION FOR:
MOUNT AYR HATCHERY

RINGGOLD COUNTY, IOWA

MOUNT AYR HATCHERY

NO.	BY DATE	REVISION

DRAWN BY:	PROJECT NUMBER:
KDN	13-04-87-01
CHK'D BY:	DATE:
BJB	01-18-2013

SHEET No:

C-02

Name	Coordinates			Description
	Y (Northing)	X (Easting)	Z (Elevation)	
1	-	-	108.33	BUILDING CORNER
2	-	-	108.33	BUILDING CORNER
3	5,329.646	5,735.876	108.00	PAVEMENT CORNER
4	5,326.690	5,714.086	107.61	PC
5	5,321.736	5,714.758	-	5' RADIUS
6	5,320.878	5,709.832	107.96	PCC
7	5,324.313	5,729.535	-	20' RADIUS
8	5,304.638	5,725.947	110.21	PT
9	5,303.224	5,733.699	110.86	PAVEMENT CORNER
10	5,290.477	5,731.855	111.27	PAVEMENT CORNER
11	5,299.648	5,668.464	107.47	PC
12	5,175.936	5,650.565	-	125' RADIUS
13	5,298.140	5,624.274	105.30	PT
14	5,291.451	5,593.183	104.13	PC
15	5,354.997	5,579.511	-	65' & 55' RADIUS
16	5,293.828	5,557.527	102.80	PT
17	5,303.238	5,560.909	102.70	PC
18	5,300.112	5,575.961	103.00	PCC
19	5,315.080	5,576.929	-	15' RADIUS
20	5,305.448	5,588.428	103.83	PT
21	5,322.598	5,603.409	105.06	MATCH EX. PAVING
22	5,328.473	5,642.519	106.62	MATCH EX. PAVING
23	5,339.811	5,642.443	106.57	MATCH EX. PAVING
24	5,339.985	5,646.981	107.25	MATCH EX. PAVING
25	5,352.841	5,645.101	107.84	MATCH EX. PAVING
26	5,355.739	5,663.471	108.01	MATCH EX. PAVING
27	5,360.111	5,662.878	108.33	MATCH EX. PAVING
28	5,341.011	5,745.267	110.30	LANDING CORNER
29	5,350.920	5,743.923	110.30	LANDING CORNER
30	5,300.799	5,644.698	106.06	PAVING
CP2	5,298.113	5,560.670	102.86	CONTROL POINT
CP6	5,575.784	5,389.349	118.02	CONTROL POINT
CP10	5,297.712	5,835.821	120.16	CONTROL POINT

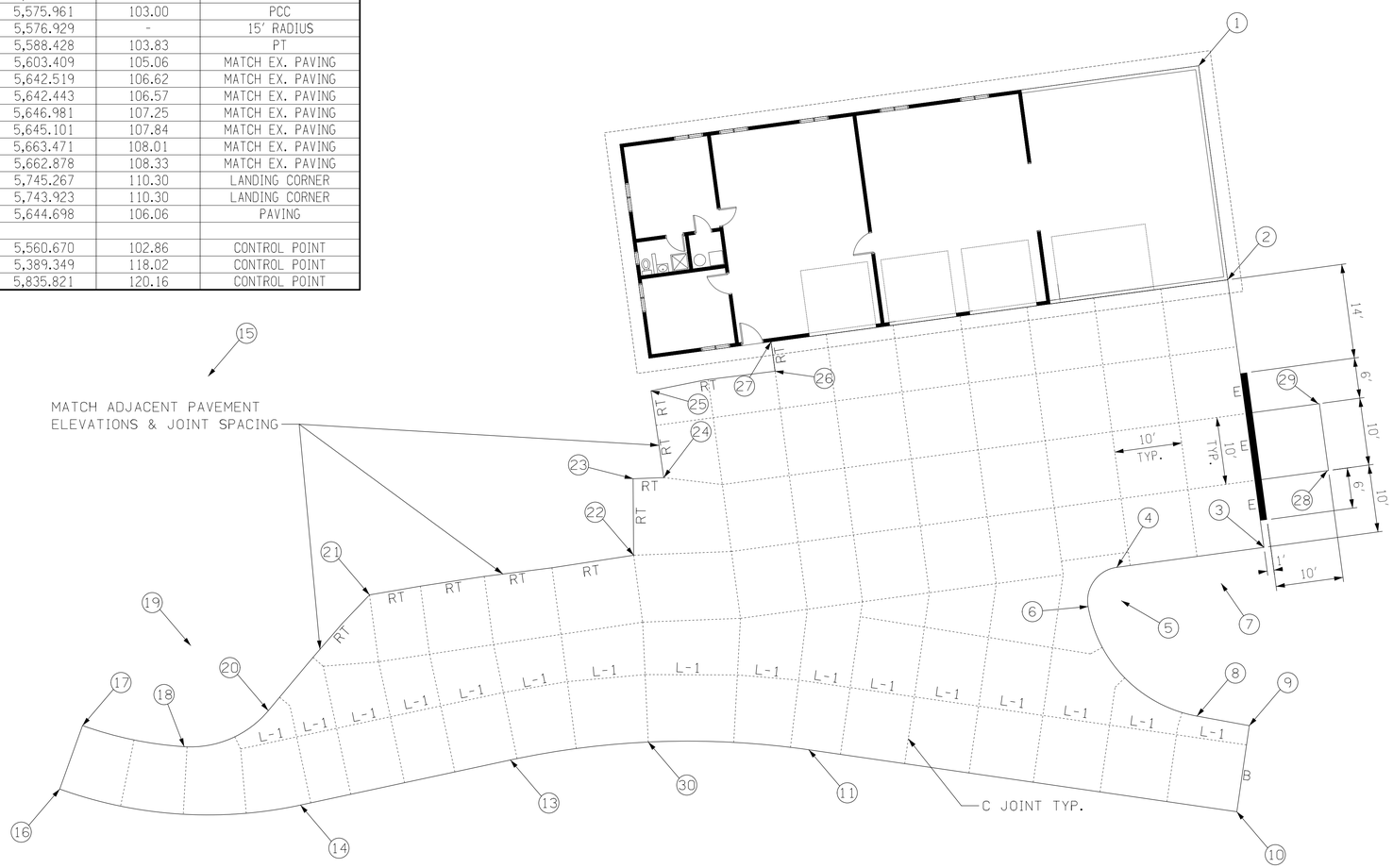

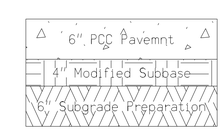

Typical PCC Pavement

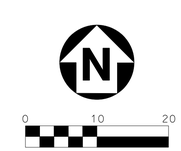

CONSULTANT:

whks
engineers • planners • land surveyors

IOWA DEPARTMENT OF NATURAL RESOURCES

ENGINEERING SERVICES - WALLACE BUILING
502 E. 9TH ST., DES MOINES, IA 50319-0034
P: 515.281.5918
F: 515.281.8685

DNR

GEOMETRIC PLAN - ALTERNATE 1

BUILDING ADDITION FOR:
MOUNT AYR HATCHERY

RINGGOLD COUNTY, IOWA

MOUNT AYR HATCHERY

NO.	BY DATE	REVISION

DRAWN BY:	PROJECT NUMBER:
KDN	13-04-87-01
CHK'D BY:	DATE:
BJB	01-18-2013

SHEET No:
C-03

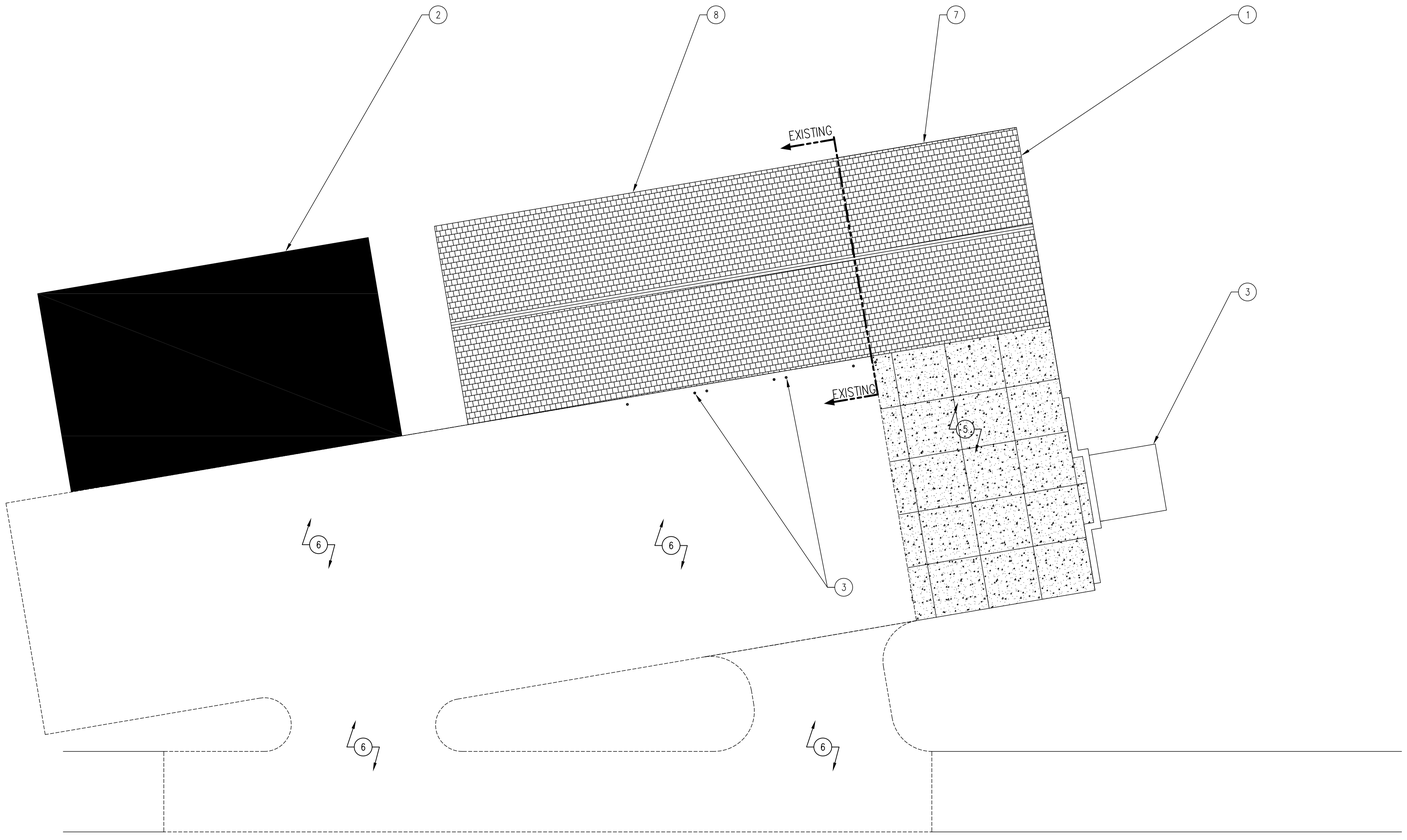

03 ARCHITECTURAL SITE PLAN
SCALE: 3/32" = 1'-0"

02 NOT USED
SCALE: 0" = 1'-0"

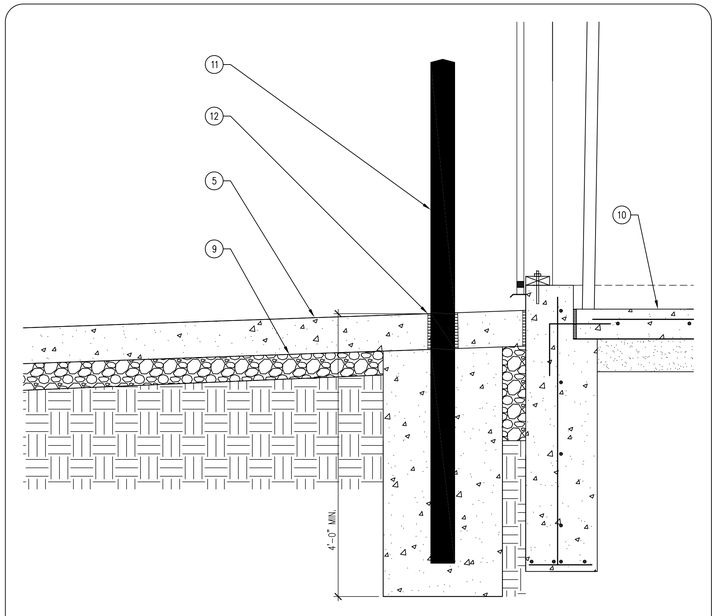

01 BOLLARD DETAIL
SCALE: 1" = 1'-0"

ALTERNATE BIDS

ALTERNATE #1. DEMOLISH, DISPOSE AND REPLACE CONCRETE PARKING LOT ADJACENT TO EXISTING STRUCTURE. REFER TO CIVIL DRAWINGS.

ALTERNATE #2. RECONSTRUCT EXISTING LOADING DOCK. REFER TO CIVIL DRAWINGS.

ALTERNATE #3. REMOVE ENTIRE EXISTING ROOF SYSTEM, AND REPLACE WITH ASPHALT SHINGLES, COLOR TO BE DETERMINED, SUBMIT SAMPLES.

ALTERNATE #4. REMOVE AND REPLACE EXISTING OVERHEAD GARAGE DOORS. REFER TO SHEET A-600 FOR DOOR SCHEDULE.

ALTERNATE #5. INSTALL NEW CONCRETE BOLLARDS LOCATED IN FRONT OF NEW AND EXISTING GARAGE DOORS. REFER TO SHEET A-010.

KEYNOTES

1. PROPOSED BUILDING ADDITION, REFER TO REFERENCE PLAN SHEET A-101.
2. EXISTING BUILDING TO REMAIN.
3. LOADING DOCK, INCLUDED WITH ALTERNATE BID #2. REFER TO CIVIL DRAWINGS FOR DETAILS.
4. TRAFFIC BOLLARD WITH PLASTIC SLEEVE. ALTERNATE BID #5.
5. CONCRETE APRON INCLUDED WITH BASE BID. REFER TO CIVIL DRAWINGS FOR MORE INFORMATION.
6. CONCRETE SITE WORK INCLUDED WITH ALTERNATE BID #1. REFER TO CIVIL DRAWINGS FOR MORE INFORMATION.
7. ASPHALT SHINGLES TO MATCH EXISTING.
8. ALTERNATE #3 RE-ROOF EXISTING STRUCTURE WITH ASPHALT SHINGLES.
9. COMPACTED GRANULAR FILL.
10. 6" CONCRETE SLAB #4 BARS 24" O.C. BOTH DIRECTIONS WITH 4" SUB-BASE.
11. TRAFFIC BOLLARD WITH PLASTIC COVER SLEEVE. 7' LONG 4"ø x 5/16" STEEL POST , EMBEDDED IN CONCRETE FOOTING. FILL POST SOLID WITH CONCRETE GROUT AND FILL. ALTERNATE BID #5.
12. ½" EXPANSION JOINT.

GENERAL NOTES

A. REFER TO REFERENCE FLOOR PLANS.
B. REFER TO CIVIL DRAWINGS.
C. FEILD VERIFY ALL DIMENSIONS AND ELEVATIONS PRIOR TO CONSTRUCTION.

CONSULTANT:

IOWA DEPARTMENT OF NATURAL RESOURCES
ENGINEERING SERVICES - WALLACE BUILING
502 E. 9TH ST., DES MOINES, IA 50319-0034
P: 515.281.5918
F: 515.281.8685

ARCHITECTURAL SITE PLAN

BUILDING ADDITIONS AND IMPROVEMENTS FOR:
MT. AYR FISH HATCHERY

RINGGOLD COUNTY, IOWA

MT. AYR FISHERIES BUILDING

NO.	BY DATE	REVISION

DRAWN BY:	PROJECT NUMBER:
JL	13-04-80-02
CHK'D BY:	DATE:
RR	01.30.2013

SHEET No:
A-010

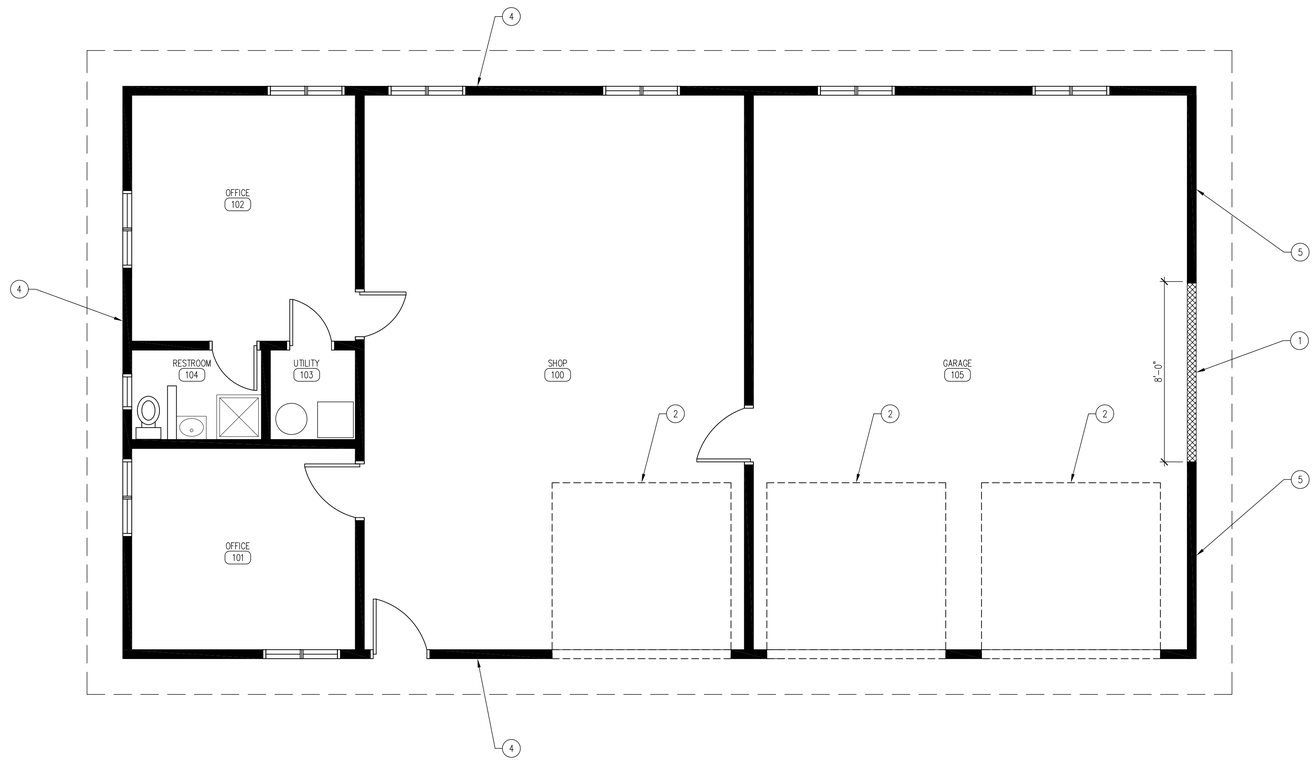

01 DEMOLITION FLOOR PLAN
SCALE: 1/4" = 1'-0"

ALTERNATE BIDS

ALTERNATE #1. DEMOLISH, DISPOSE AND REPLACE CONCRETE PARKING LOT ADJACENT TO EXISTING STRUCTURE. REFER TO CIVIL DRAWINGS.

ALTERNATE #2. RECONSTRUCT EXISTING LOADING DOCK. REFER TO CIVIL DRAWINGS.

ALTERNATE #3. REMOVE ENTIRE EXISTING ROOF SYSTEM, AND REPLACE WITH ASPHALT SHINGLES, COLOR TO BE DETERMINED, SUBMIT SAMPLES.

ALTERNATE #4. REMOVE AND REPLACE EXISTING OVERHEAD GARAGE DOORS. REFER TO SHEET A-600 FOR DOOR SCHEDULE.

ALTERNATE #5. INSTALL NEW CONCRETE BOLLARDS LOCATED IN FRONT OF NEW AND EXISTING GARAGE DOORS. REFER TO SHEET A-010.

KEYNOTES

1. DEMOLISH WALL SECTION, REFER TO SHEET A-301 FOR EXACT DIMENSIONS OF OPENING AND PROPER REINFORCEMENT.
2. REPLACE EXISTING OVERHEAD GARAGE DOORS, REFER TO SHEET A-600 DOOR SCHEDULE FOR REPLACEMENT. ALTERNATE BID #4.
3. NOT USED.
4. REMOVE VERTICAL CORRUGATED METAL SIDING AROUND ENTIRE BUILDING. REPLACE WITH CLASSIC PROFILE 26 GAUGE PREFORMED METAL SIDING WITH KYNAR 500 FINISH AND ALL TRIM FOR DOORS AND WINDOWS. COLOR TO BE DETERMINED, SUBMIT SAMPLES.
5. REMOVE EXISTING METAL SIDING.

GENERAL NOTES

A. REFER TO FINISH SCHEDULE, SHEET A-600.
B. REFER TO DOOR SCHEDULE. SHEET A-600.
C. REFER TO REFLECTED CEILING PLAN FOR CEILING HEIGHTS, SHEET A-110.
D. REFER TO INDEX SHEET FOR WALL TYPES, SHEET A-002.
E. FIELD VERIFY ALL DIMENSIONS PRIOR TO CONSTRUCTION, SHEET A-101.
F. ALL ELECTRICAL TO BE NEC 2010 CODE COMPLIANT.
G. REFER TO FINISH SCHEDULE SHEET FOR COLOR AND MATERIAL SELECTIONS, SHEET A-600.

CONSULTANT:

IOWA DEPARTMENT OF NATURAL RESOURCES
ENGINEERING SERVICES - WALLACE BUILING
502 E. 9TH ST., DES MOINES, IA 50319-0034
P: 515.281.5918
F: 515.281.8685

DEMO PLAN & WALL SECTION

BUILDING ADDITIONS AND IMPROVEMENTS FOR:
MT. AYR FISH HATCHERY

RINGGOLD COUNTY, IOWA

MT. AYR FISHERIES BUILDING

NO.	BY: DATE	REVISION

DRAWN BY:	PROJECT NUMBER:
JL	13-04-80-02
CHK'D BY:	DATE:
RR	01.30.2013

SHEET No:
A-011

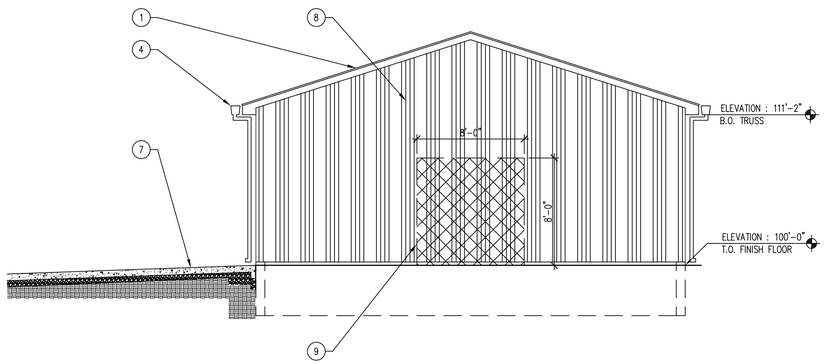

04 DEMOLITION PLAN ELEVATION–EAST
SCALE: 3/16" = 1'-0"

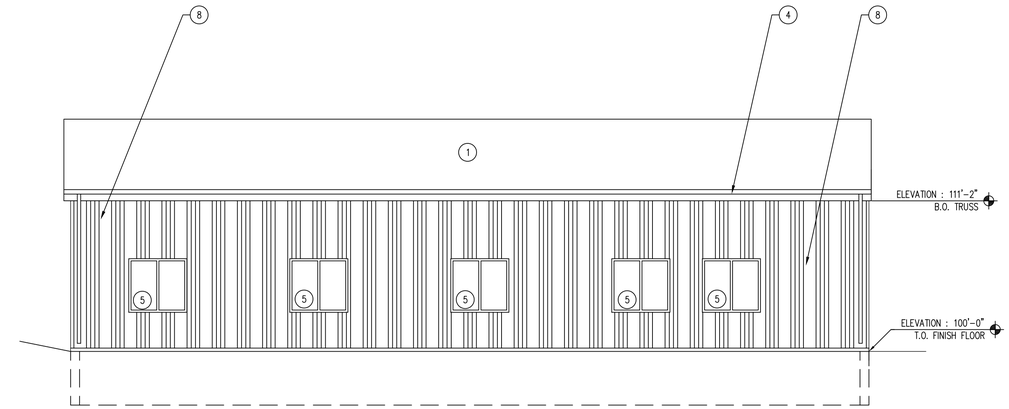

02 DEMOLITION PLAN ELEVATION–NORTH
SCALE: 3/16" = 1'-0"

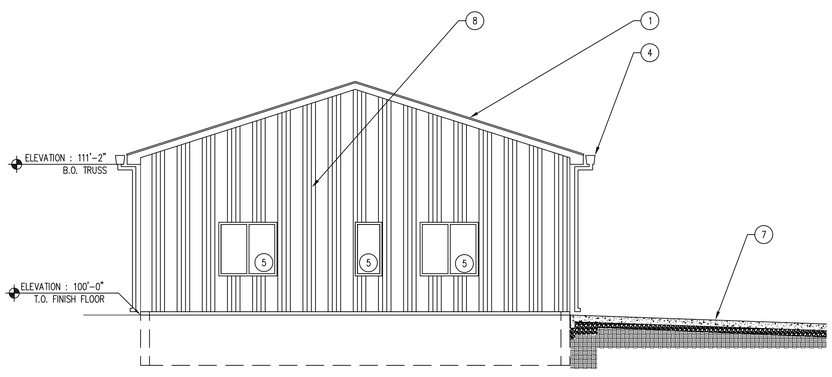

03 DEMOLITION PLAN ELEVATION–WEST
SCALE: 3/16" = 1'-0"

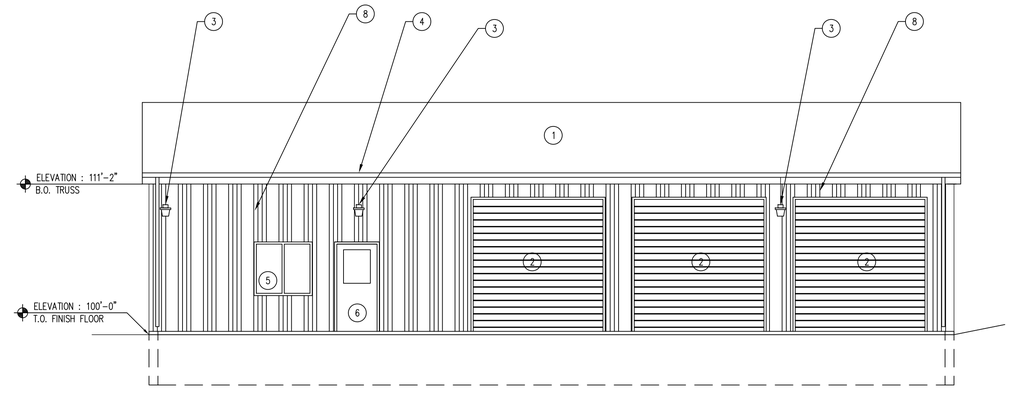

01 DEMOLITION PLAN ELEVATION–SOUTH
SCALE: 3/16" = 1'-0"

ALTERNATE BIDS

ALTERNATE #1. DEMOLISH, DISPOSE AND REPLACE CONCRETE PARKING LOT ADJACENT TO EXISTING STRUCTURE. REFER TO CIVIL DRAWINGS.

ALTERNATE #2. RECONSTRUCT EXISTING LOADING DOCK. REFER TO CIVIL DRAWINGS.

ALTERNATE #3. REMOVE ENTIRE EXISTING ROOF SYSTEM, AND REPLACE WITH ASPHALT SHINGLES, COLOR TO BE DETERMINED, SUBMIT SAMPLES.

ALTERNATE #4. REMOVE AND REPLACE EXISTING OVERHEAD GARAGE DOORS. REFER TO SHEET A–600 FOR DOOR SCHEDULE.

ALTERNATE #5. INSTALL NEW CONCRETE BOLLARDS LOCATED IN FRONT OF NEW AND EXISTING GARAGE DOORS. REFER TO SHEET A–010.

KEYNOTES

1. REMOVE EXISTING ROOFING SYSTEM AND REPLACE WITH ASPHALT SHINGLES. COLOR TO BE DETERMINED. ALTERNATE BID #3.
2. REPLACE EXISTING OVERHEAD GARAGE DOOR, REFER TO A–600 DOOR SCHEDULE FOR REPLACEMENT. ALTERNATE BID #4
3. REPLACE ALL EXISTING EXTERIOR LIGHTS WITH LED WALL PACK WITH INTEGRAL PHOTOCELL, REFER TO SHEET A–110.
4. REMOVE EXISTING METAL GUTTER AND DOWNSPOUT SYSTEM. NEW SYSTEM TO MATCH ROOF, FASCIA AND SOFFIT.
5. EXISTING WINDOWS TO REMAIN.
6. EXISTING MAN–DOOR TO REMAIN.
7. REMOVE EXISTING CONCRETE APRON ADJACENT TO BUILDING, REPLACE WITH 6" CONCRETE SLAB WITH #4 REBAR 24" O.C. BOTH DIRECTIONS WITH 4" SUB–BASE. ALTERNATE #1. REFER TO CIVIL DRAWINGS.
8. REMOVE ALL EXTERIOR VERTICAL CORRUGATED METAL SIDING AROUND ENTIRE BUILDING. REPLACE WITH CLASSIC PROFILE 26 GAUGE, PREFORMED METAL SIDING WITH KYNAR 500 FINISH AND ALL TRIM FOR DOORS AND WINDOWS. COLOR TO BE DETERMINED, SUBMIT SAMPLES.
9. CUT AND REMOVE AREA FOR NEW PASS THROUGH BETWEEN BUILDINGS. CUT & REMOVE SECTION OF CONCRETE CURB TO ALLOW FOR NEW SLAB. REFER SHEET A–301 FOR DETAILS AND PROPER REINFORCEMENT.

GENERAL NOTES

A. REFER TO FINISH SCHEDULE, SHEET A–600.
B. REFER TO DOOR SCHEDULE. SHEET A–600.
C. REFER TO REFLECTED CEILING PLAN FOR CEILING HEIGHTS, SHEET A–110.
D. REFER TO INDEX SHEET FOR WALL TYPES, SHEET A–002.
E. FIELD VERIFY ALL DIMENSIONS PRIOR TO CONSTRUCTION, SHEET A–101.
F. ALL ELECTRICAL TO BE NEC 2010 CODE COMPLIANT.
G. REFER TO FINISH SCHEDULE SHEET FOR COLOR AND MATERIAL SELECTIONS, SHEET A–600.
H. CONTRACTOR PRIOR TO CONSTRUCTION, MUST HAVE ENGINEER'S SIGNATURE AND SEAL ON SUBMITTED SHOP DRAWINGS.

CONSULTANT:

IOWA DEPARTMENT OF NATURAL RESOURCES
ENGINEERING SERVICES - WALLACE BUILING
502 E. 9TH ST., DES MOINES, IA 50319-0034
P: 515.281.5918
F: 515.281.8685

DEMO ELEVATIONS

BUILDING ADDITIONS AND IMPROVEMENTS FOR:
MT. AYR FISH HATCHERY

RINGGOLD COUNTY, IOWA

MT. AYR FISHERIES BUILDING

NO.	BY DATE	REVISION

DRAWN BY:	PROJECT NUMBER:
JL	13-04-80-02
CHK'D BY:	DATE:
RR	01.30.2013

SHEET No:
A-012

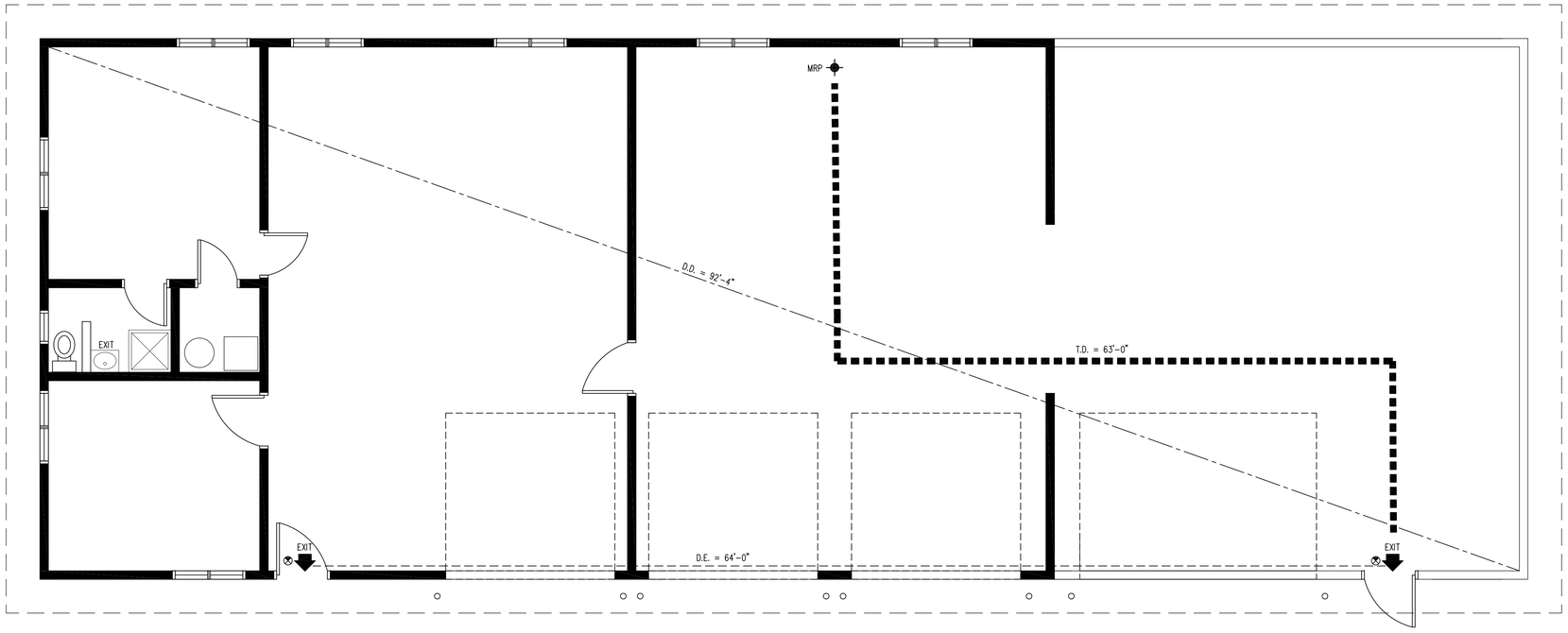

01 LIFE SAFETY PLAN
SCALE: 1/4" = 1'-0"

INTERIOR FINISH CLASSIFICATION

OCCUPANCY GROUP	WITHOUT AUTOMATIC SPRINKLER SYSTEM . (FBC TBL 803.5)		
	VERTICAL EXITS & EXIT PASSAGEWAYS	EXIT ACCESS CORRIDORS	ROOMS & ENCLOSED SPACES
GROUP S-1	CLASS A	CLASS B	CLASS C

CODE SUMMARY

BUILDING AREA	2,186 GSF
TENANT AREA	1,997 NSF
CONSTRUCTION TYPE	V-B WITHOUT SPRINKLER SYSTEM
OCCUPANCY	GROUP S-1 - STORAGE

	REQUIRED	PROVIDED
ALLOWABLE BLDG AREA (IBC TBL 503)	9,000 SF	1,997 SF
HEIGHT LIMITATION (IBC TBL 503)	2 STORIES (40')	1 STORIES (26')
AUTOMATIC SPRINKLER SYSTEM (NFPA 13)	NO	NO
EXIT ACCESS TRAVEL DISTANCE (IBC 1016.1)	200'-0"	63'-0"
EXIT ACCESS DOORWAYS (IBC TBL 1019.1)	2	2
EGRESS WIDTH PER OCCUPANT (IBC TBL 1005.1) LEVEL [.2"]	(.2") X 14 = 2.8"	2 DOORS @ 36"= 72"

LIFE SAFETY LEGEND

SYMBOL	DESCRIPTION	LINE TYPE
D.E.	EXIT TO EXIT IN LINEAR FEET	
T.D.	TRAVEL DISTANCE FROM M.R.P.	
	EXIT LIGHT	
M.R.P.	MOST REMOTE POINT	
	EXIT / ENTRY	
FEC	FIRE EXTINGUISHER	

GENERAL NOTES

A. INFORMATION PROVIDED ON THE LIFE SAFETY PLAN INDICATES EGREESS REQUIREMENTS.
B. ALL CODE REFERENCES ARE FROM INTERNATIONAL BUILDING CODE, WITH AMENDMENTS UNLESS OTHERWISE NOTED.

CONSULTANT:

IOWA DEPARTMENT OF NATURAL RESOURCES
ENGINEERING SERVICES - WALLACE BUILING
502 E. 9TH ST., DES MOINES, IA 50319-0034
P: 515.281.5918
F: 515.281.8685

LIFE SAFETY PLAN

BUILDING ADDITIONS AND IMPROVEMENTS FOR:
MT. AYR FISH HATCHERY

RINGGOLD COUNTY, IOWA

MT. AYR FISHERIES BUILDING

NO.	BY DATE	REVISION

DRAWN BY: JL
PROJECT NUMBER: 13-04-80-02
CHK'D BY: RR
DATE: 01.30.2013
SHEET No: A-020

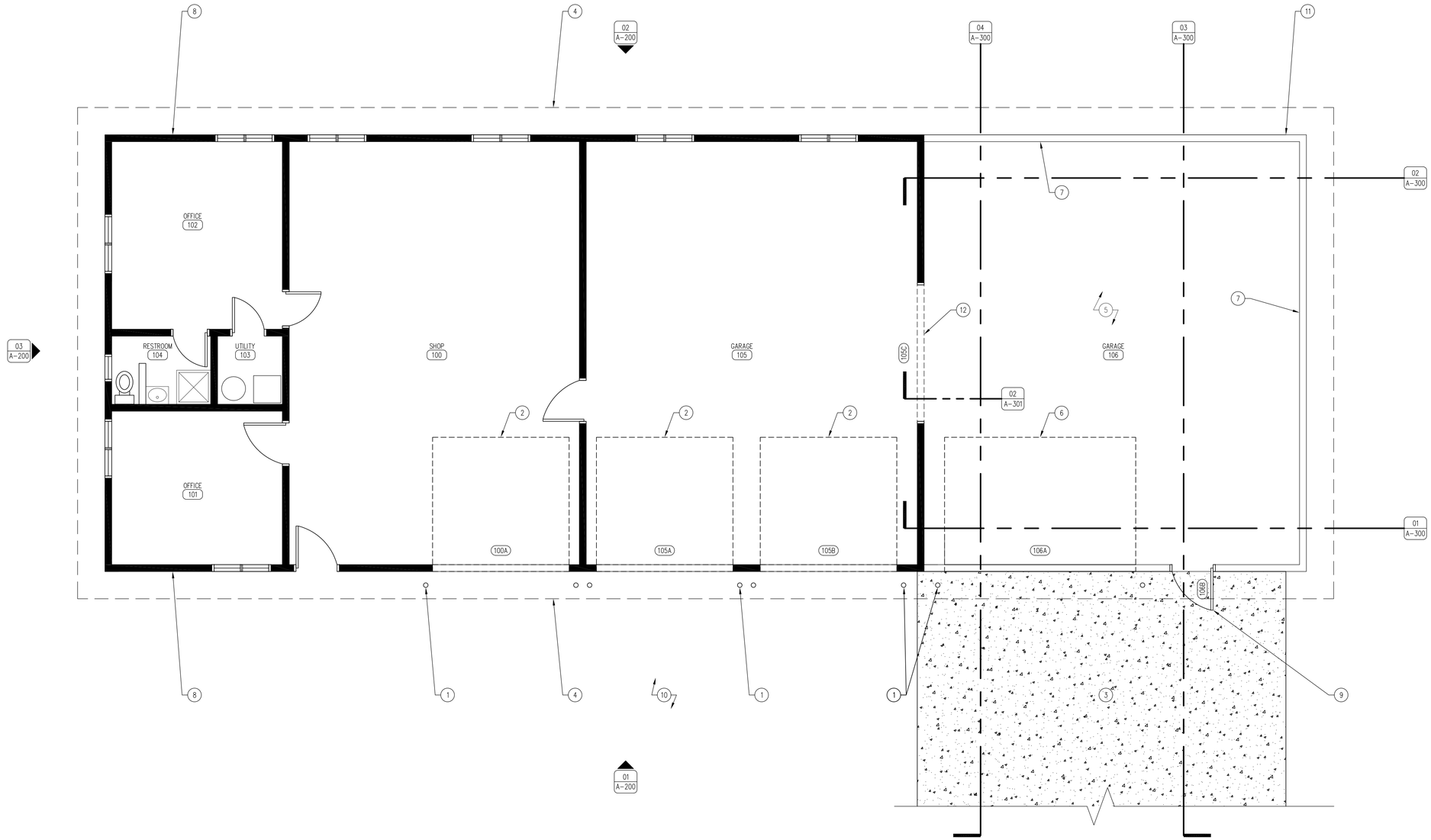

01 REFERENCE FLOOR PLAN
SCALE: 1/4" = 1'-0"

ALTERNATE BIDS

ALTERNATE #1. DEMOLISH, DISPOSE AND REPLACE CONCRETE PARKING LOT ADJACENT TO EXISTING STRUCTURE. REFER TO CIVIL DRAWINGS.

ALTERNATE #2. RECONSTRUCT EXISTING LOADING DOCK. REFER TO CIVIL DRAWINGS.

ALTERNATE #3. REMOVE ENTIRE EXISTING ROOF SYSTEM, AND REPLACE WITH ASPHALT SHINGLES, COLOR TO BE DETERMINED, SUBMIT SAMPLES.

ALTERNATE #4. REMOVE AND REPLACE EXISTING OVERHEAD GARAGE DOORS. REFER TO SHEET A-600 FOR DOOR SCHEDULE.

ALTERNATE #5. INSTALL NEW CONCRETE BOLLARDS LOCATED IN FRONT OF NEW AND EXISTING GARAGE DOORS. REFER TO SHEET A-010.

KEYNOTES

1. TRAFFIC BOLLARD WITH PLASTIC SLEEVE. REFER TO A-010 FOR DETAILS. ALTERNATE BID #5.
2. REPLACE EXISTING OVERHEAD GARAGE DOOR & TRIM, REFER TO A-600 DOOR SCHEDULE FOR REPLACEMENT. ALTERNATE BID #4.
3. 6" CONCRETE APRON WITH #4 REBAR 24" O.C. BOTH DIRECTION WITH 4" SUB-BASE. SLOPE AWAY FROM BUILDING. INCLUDED IN BASE BID. REFER TO CIVIL DRAWINGS.
4. ROOF LINE ABOVE.
5. 6" CONCRETE SLAB WITH #4 REBAR 24" O.C. BOTH DIRECTIONS WITH 4" SUB-BASE.
6. OVERHEAD GARAGE DOOR. INCLUDED IN BASE BID. REFER TO SHEET A-600.
7. 2"x6" STUD WALL 16" O.C. TO BOTTOM OF TRUSS, COVERED WITH ½" RE-WALL ESSENTIAL BOARD.
8. REMOVE VERTICAL CORRUGATED METAL SIDING AROUND ENTIRE BUILDING. REPLACE WITH CLASSIC PROFILE 26 GAUGE, PREFORMED METAL SIDING WITH KYNAR 500 FINISH AND ALL TRIM FOR DOORS AND WINDOWS COLOR TO BE DETERMINED, SUBMIT SAMPLES.
9. DOOR AS SCHEDULED. REFER TO A-600.
10. 6" CONCRETE APRON WITH #4 REBAR 12" O.C. BOTH DIRECTIONS WITH 4" SUB-BASE. SLOPE AWAY FROM BUILDING. REFER TO CIVIL DRAWINGS. ALTERNATE BID #1.
11. CLASSIC PROFILE 26 GAUGE, PREFORMED METAL SIDING WITH KYNAR 500 FINISH AND ALL TRIM FOR DOORS AND WINDOWS COLOR TO BE DETERMINED, SUBMIT SAMPLES.
12. CUT AND REMOVE AREA FOR NEW PASS THROUGH BETWEEN BUILDINGS. CUT & REMOVE SECTION OF CONCRETE CURB TO ALLOW FOR NEW SLAB. REFER SHEET A-301 FOR DETAILS AND PROPER REINFORCEMENT.

GENERAL NOTES

A. REFER TO FINISH SCHEDULE, SHEET A-600.
B. REFER TO DOOR SCHEDULE. SHEET A-600.
C. REFER TO REFLECTED CEILING PLAN FOR CEILING HEIGHTS, SHEET A-110.
D. REFER TO INDEX SHEET FOR WALL TYPES, SHEET A-002.
E. FIELD VERIFY ALL DIMENSIONS PRIOR TO CONSTRUCTION, SHEET A-101.
F. ALL ELECTRICAL TO BE NEC 2010 CODE COMPLIANT.
G. REFER TO FINISH SCHEDULE SHEET FOR COLOR AND MATERIAL SELECTIONS, SHEET A-600.
H. CONTRACTOR PRIOR TO CONSTRUCTION MUST HAVE ENGINEER'S SIGNATURE AND SEAL ON SUBMITTED SHOP DRAWINGS.

CONSULTANT:

IOWA DEPARTMENT OF NATURAL RESOURCES
ENGINEERING SERVICES - WALLACE BUILING
502 E. 9TH ST., DES MOINES, IA 50319-0034
P: 515.281.5918
F: 515.281.8685

REFERENCE FLOOR PLAN

BUILDING ADDITIONS AND IMPROVEMENTS FOR:
MT. AYR FISH HATCHERY

RINGGOLD COUNTY, IOWA

MT. AYR FISHERIES BUILDING

NO.	BY / DATE	REVISION

DRAWN BY: JL
PROJECT NUMBER: 13-04-80-02
CHK'D BY: RR
DATE: 01.30.2013
SHEET No: A-100

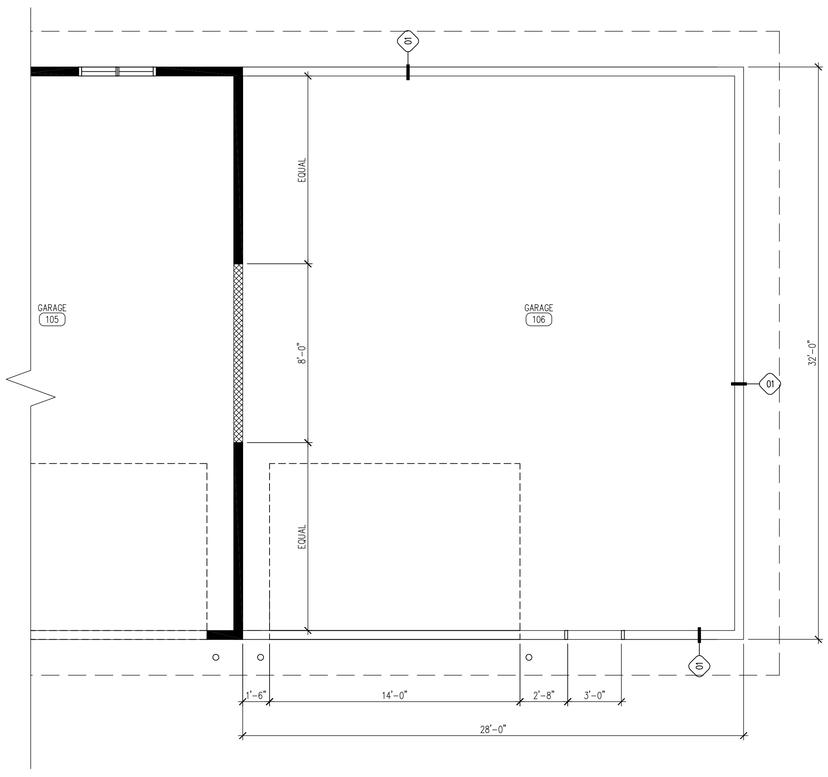

04 DIMENSION FLOOR PLAN
SCALE: 1/4" = 1'-0"

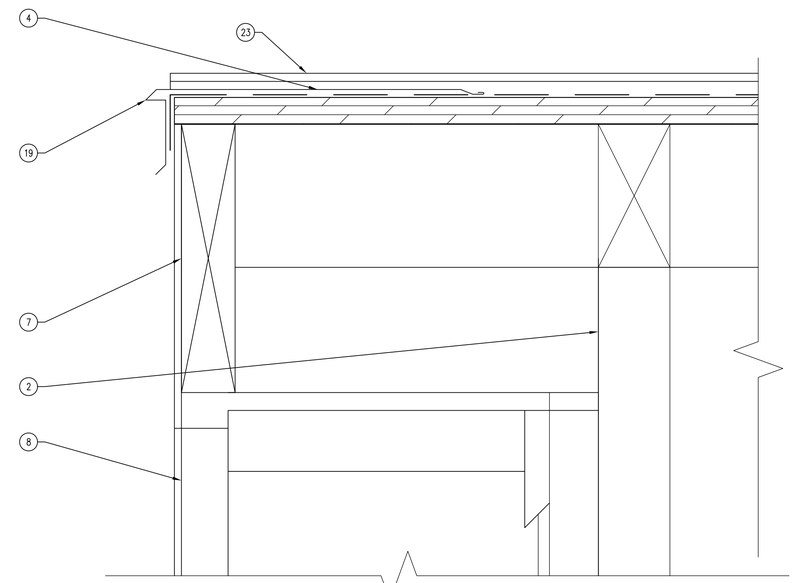

02 ROOF DETAIL-GABLE
SCALE: 6" = 1'-0"

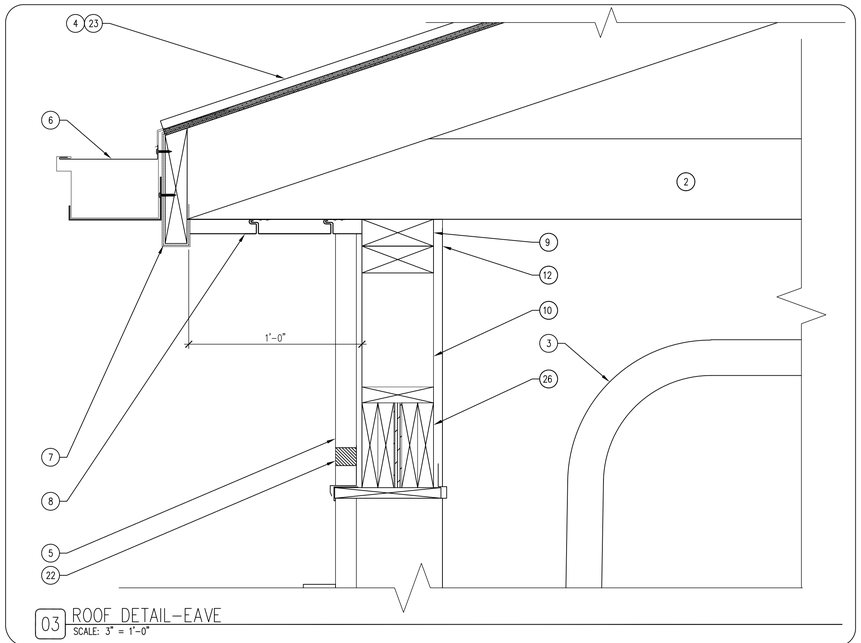

03 ROOF DETAIL-EAVE
SCALE: 3" = 1'-0"

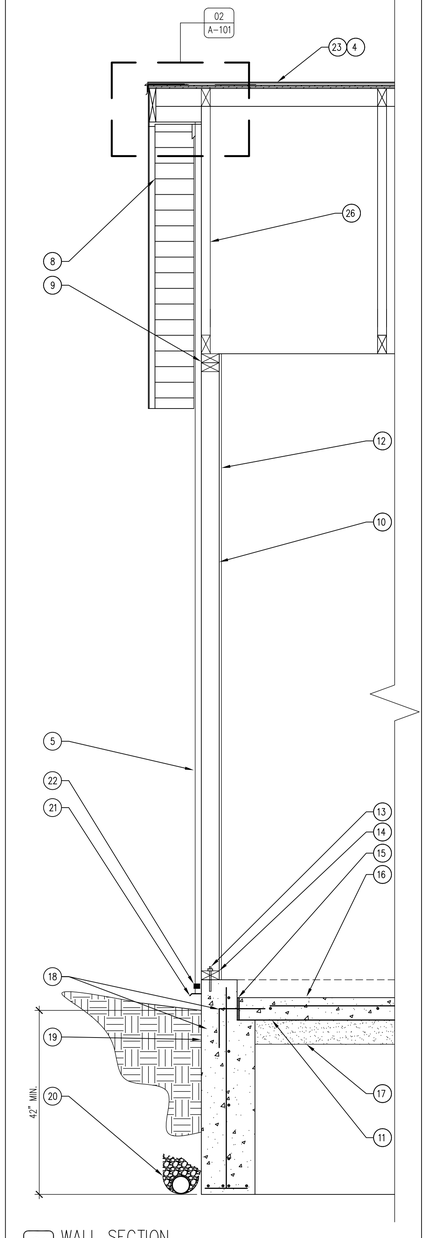

01 WALL SECTION
SCALE: 1" = 1'-0"

ALTERNATE BIDS

ALTERNATE #1. DEMOLISH, DISPOSE AND REPLACE CONCRETE PARKING LOT ADJACENT TO EXISTING STRUCTURE. REFER TO CIVIL DRAWINGS.

ALTERNATE #2. RECONSTRUCT EXISTING LOADING DOCK. REFER TO CIVIL DRAWINGS.

ALTERNATE #3. REMOVE ENTIRE EXISTING ROOF SYSTEM, AND REPLACE WITH ASPHALT SHINGLES, COLOR TO BE DETERMINED, SUBMIT SAMPLES.

ALTERNATE #4. REMOVE AND REPLACE EXISTING OVERHEAD GARAGE DOORS. REFER TO SHEET A-600 FOR DOOR SCHEDULE.

ALTERNATE #5. INSTALL NEW CONCRETE BOLLARDS LOCATED IN FRONT OF NEW AND EXISTING GARAGE DOORS. REFER TO SHEET A-010.

KEYNOTES

1. NOT USED.
2. TRUSS. (SPECIFIED BY BUILDING SUPPLIER)
3. OVERHEAD GARAGE DOOR. REFER TO DOOR SCHEDULE A-600.
4. ¾" PLYWOOD ROOF DECK SHEATHING WITH 30 POUND FELT SURFACE APPLIED PER ROOFING MANUFACTURER'S RECOMMENDATIONS.
5. CLASSIC PROFILE 26 GAUGE, PREFORMED METAL SIDING PANEL WITH KYNAR 500. REPLACE WINDOW AND DOOR TRIM WITH INSTALLATION OF METAL SIDING.
6. METAL GUTTER AND DOWNSPOUT SYSTEM WITH LEAFGUARD TO MATCH, FASCIA AND SOFFIT.
7. 2"x10" FASCIA & EDGE WITH BREAK METAL TRIM TO MATCH GUTTERS.
8. VENTED FLUSH SOFFIT PANELS TO MATCH ROOF GUTTERS.
9. TOP PLATE.
10. 2"x6" STUD WALL 16" O.C. WITH ½" RE-WALL. ESSENTIAL BOARD.
11. VAPOR BARRIER.
12. ½" RE-WALL ESSENTIAL BOARD.
13. ½"ø ANCHOR BOLT CAST IN SLAB.
14. 2"x6" SILL PLATE.
15. ½" EXPANSION JOINT.
16. 6" CONCRETE SLAB WITH #4 REBAR 24" O.C. BOTH DIRECTIONS WITH 4" SUB-BASE.
17. 4" SUB-BASE.
18. CONTINUOUS PERIMETER CONCRETE TRENCH FOUNDATION. AS SHOWN, WITH #4 REINFORCEMENT BAR CONTINUOUS. 12" O.C. BOTH DIRECTIONS.
19. METAL DRIP EDGE. COLOR TO MATCH GUTTERS & SOFFITS.
20. CONTINUOUS FOUNDATION DRAIN-TILE WITH 12" OF POROUS BACK FILL AND FILTER FABRIC. DAYLIGHT DRAIN DITCH TO NORTH OF BUILDING. REFER TO CIVIL DRAWINGS.
21. FLASHING & DRIP EDGE.
22. NEOPRENE GASKET.
23. ASPHALT SHINGLES. COLOR TO MATCH EXISTING.
24. COMPACTED GRANULAR FILL.
25. 6" CONCRETE SLAB #4 BARS 24" O.C. BOTH DIRECTIONS WITH 4" SUB-BASE.
26. GARAGE DOORHEADER, BY BUILDING SUPPLIER.

GENERAL NOTES

A. REFER TO FINISH SCHEDULE, SHEET A-600.
B. REFER TO DOOR SCHEDULE. SHEET A-600.
C. REFER TO REFLECTED CEILING PLAN FOR CEILING HEIGHTS, SHEET A-110.
D. REFER TO INDEX SHEET FOR WALL TYPES, SHEET A-002.
E. FIELD VERIFY ALL DIMENSIONS PRIOR TO CONSTRUCTION, SHEET A-101.
F. ALL ELECTRICAL TO BE NEC 2010 CODE COMPLIANT.
G. REFER TO FINISH SCHEDULE SHEET FOR COLOR AND MATERIAL SELECTIONS, SHEET A-600.
H. CONTRACTOR PRIOR TO CONSTRUCTION MUST HAVE ENGINEER'S SIGNATURE AND SEAL ON SUBMITTED SHOP DRAWINGS.

CONSULTANT:

IOWA DEPARTMENT OF NATURAL RESOURCES
ENGINEERING SERVICES - WALLACE BUILING
502 E. 9TH ST., DES MOINES, IA 50319-0034
P: 515.281.5918
F: 515.281.8685

DIMENSION PLAN & DETAIL DRAWINGS

BUILDING ADDITIONS AND IMPROVEMENTS FOR:
MT. AYR FISH HATCHERY

RINGGOLD COUNTY, IOWA

MT. AYR FISHERIES BUILDING

NO.	BY DATE	REVISION

DRAWN BY: JL
PROJECT NUMBER: 13-04-80-02
CHK'D BY: RR
DATE: 01.30.2013
SHEET No: A-101

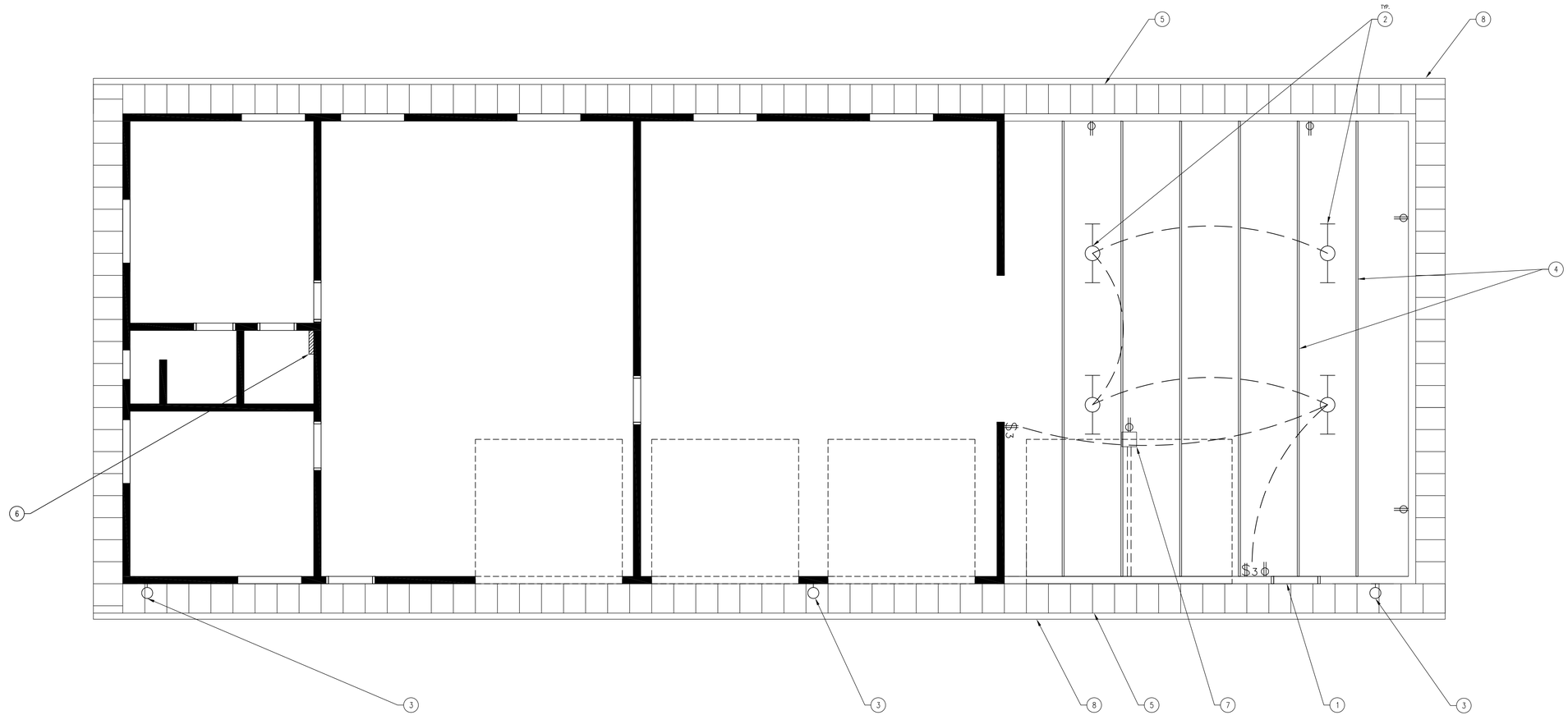

01 REFLECTED CEILING PLAN
SCALE: 0 = 1'-0"

ALTERNATE BIDS

ALTERNATE #1. DEMOLISH, DISPOSE AND REPLACE CONCRETE PARKING LOT ADJACENT TO EXISTING STRUCTURE. REFER TO CIVIL DRAWINGS.

ALTERNATE #2. RECONSTRUCT EXISTING LOADING DOCK. REFER TO CIVIL DRAWINGS.

ALTERNATE #3. REMOVE ENTIRE EXISTING ROOF SYSTEM, AND REPLACE WITH ASPHALT SHINGLES, COLOR TO BE DETERMINED, SUBMIT SAMPLES.

ALTERNATE #4. REMOVE AND REPLACE EXISTING OVERHEAD GARAGE DOORS. REFER TO SHEET A-600 FOR DOOR SCHEDULE.

ALTERNATE #5. INSTALL NEW CONCRETE BOLLARDS LOCATED IN FRONT OF NEW AND EXISTING GARAGE DOORS. REFER TO SHEET A-010.

LIGHTING LEGEND

	LED WALL PACK
	4' FLUORESCENT LIGHT
$3	THREE POLE LIGHT SWITCH
	110 OUTLET

KEYNOTES

1. DOOR HEADER BELOW.
2. 2'x4' FLUORESCENT LIGHT FIXTURE: 4 LAMP, 32 WATT WITH LITHONIA AF10432. PROVIDED BY OWNER.
3. SECURITY LED WALL PACK WITH INTEGRAL PHOTOCELL, 3 LIGHT BARS, 20.1 WATT/BAR BETA LED – SEC-EDG-2M-3-C-UL-BL-525-PC.
4. TRUSS, SPECIFIED BY PRE-ENGINEERED BUILDING SUPPLIER.
5. VENTED SOFFIT PANELS TO MATCH EXISTING.
6. EXISTING ELECTRICAL PANEL.
7. GARAGE DOOR OPENER.
8. DOWNSPOUT AND GUTTER SYSTEM TO MATCH VENTED SOFFIT PANELS AND ROOF SYSTEM.

GENERAL NOTES

A. REFER TO FINISH SCHEDULE, SHEET A-600.
B. REFER TO DOOR SCHEDULE. SHEET A-600.
C. REFER TO REFLECTED CEILING PLAN FOR CEILING HEIGHTS, SHEET A-110.
D. REFER TO INDEX SHEET FOR WALL TYPES, SHEET A-002.
E. FIELD VERIFY ALL DIMENSIONS PRIOR TO CONSTRUCTION, SHEET A-101.
F. ALL ELECTRICAL TO BE NEC 2010 CODE COMPLIANT.
G. REFER TO FINISH SCHEDULE SHEET FOR COLOR AND MATERIAL SELECTIONS, SHEET A-600.
H. CONTRACTOR PRIOR TO CONSTRUCTION MUST HAVE ENGINEER'S SIGNATURE AND SEAL ON SUBMITTED SHOP DRAWINGS.

CONSULTANT:

IOWA DEPARTMENT OF NATURAL RESOURCES
ENGINEERING SERVICES - WALLACE BUILING
502 E. 9TH ST., DES MOINES, IA 50319-0034
P: 515.281.5918
F: 515.281.8685

REFLECTED CEILING PLAN

BUILDING ADDITIONS AND IMPROVEMENTS FOR:
MT. AYR FISH HATCHERY

RINGGOLD COUNTY, IOWA

MT. AYR FISHERIES BUILDING

NO.	BY DATE	REVISION

DRAWN BY: JL
PROJECT NUMBER: 13-04-80-02
CHK'D BY: RR
DATE: 01.30.2013
SHEET No: A-110

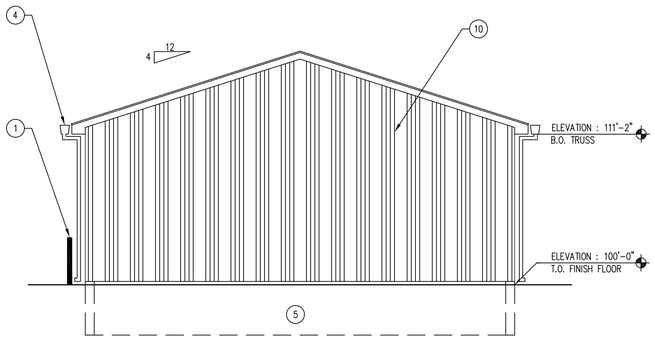

04 BUILDING ELEVATION-EAST
SCALE: 3/16" = 1'-0"

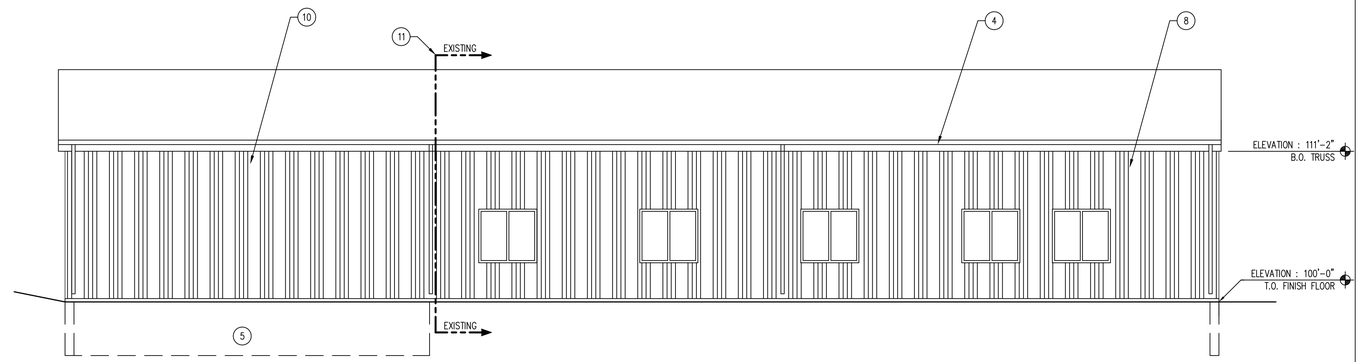

02 BUILDING ELEVATION-NORTH
SCALE: 3/16" = 1'-0"

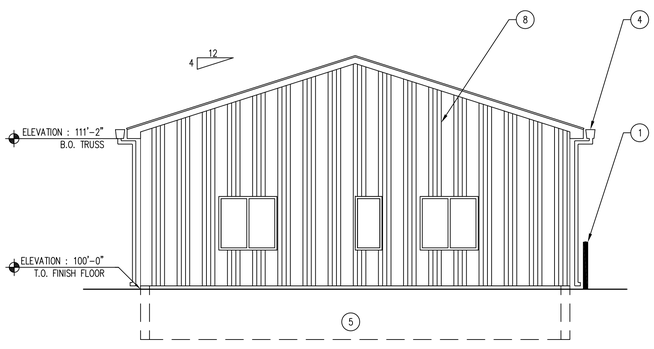

03 BUILDING ELEVATION-WEST
SCALE: 3/16" = 1'-0"

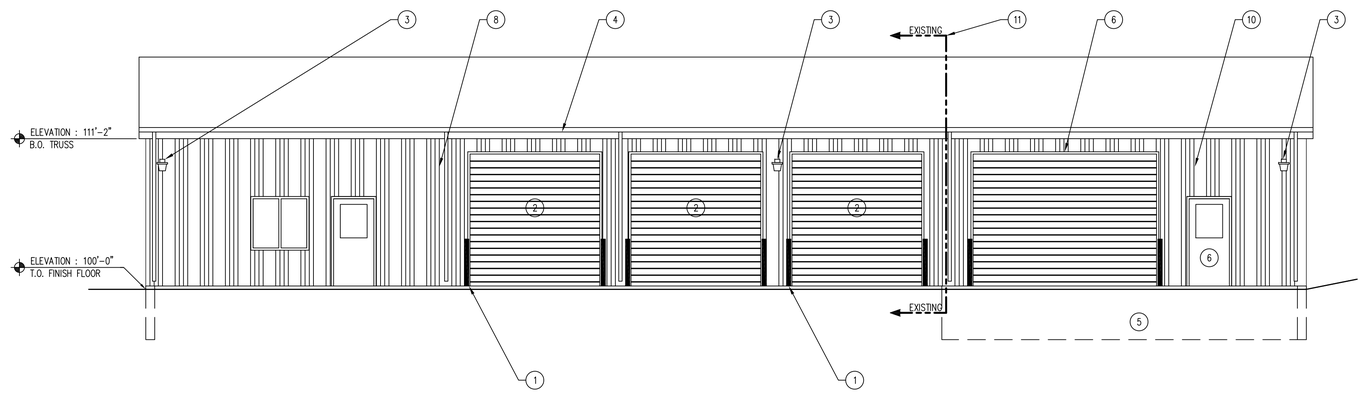

01 BUILDING ELEVATION-SOUTH
SCALE: 3/16" = 1'-0"

ALTERNATE BIDS

ALTERNATE #1. DEMOLISH, DISPOSE AND REPLACE CONCRETE PARKING LOT ADJACENT TO EXISTING STRUCTURE. REFER TO CIVIL DRAWINGS.

ALTERNATE #2. RECONSTRUCT EXISTING LOADING DOCK. REFER TO CIVIL DRAWINGS.

ALTERNATE #3. REMOVE ENTIRE EXISTING ROOF SYSTEM, AND REPLACE WITH ASPHALT SHINGLES, COLOR TO BE DETERMINED, SUBMIT SAMPLES.

ALTERNATE #4. REMOVE AND REPLACE EXISTING OVERHEAD GARAGE DOORS. REFER TO SHEET A-600 FOR DOOR SCHEDULE.

ALTERNATE #5. INSTALL NEW CONCRETE BOLLARDS LOCATED IN FRONT OF NEW AND EXISTING GARAGE DOORS. REFER TO SHEET A-010.

KEYNOTES

1. TRAFFIC BOLLARD WITH PLASTIC SLEEVE. ALTERNATE BID #5. REFER TO SHEET A-010.
2. REPLACE EXISTING OVERHEAD GARAGE DOOR & TRIM. ALTERNATE BID #4. REFER TO A-600, DOOR SCHEDULE FOR REPLACEMENT.
3. LED WALL PACK WITH INTEGRAL PHOTOCELL, REFER TO A-110.
4. METAL GUTTER AND DOWNSPOUT SYSTEM TO MATCH ROOF, FASCIA AND SOFFIT. TIE GUTTERS FROM ADDITION TO FOUNDATION DRAIN TILE. SCREEN DRAIN ENTRY FROM ABOVE SURFACE.
5. CONTINUOUS PERIMETER CONCRETE TRENCH FOUNDATION. AS SHOWN.
6. OVERHEAD GARAGE DOOR. REFER TO DOOR SCHEDULE A-600.
7. 2"x6" STUD WALL 16" O.C. TO BOTTOM OF TRUSS, COVERED WITH RE-WALL ESSENTIAL BOARD.
8. REMOVE VERTICAL CORRUGATED METAL SIDING AROUND ENTIRE BUILDING. REPLACE WITH CLASSIC PROFILE 26 GAUGE, PREFORMED METAL SIDING WITH KYNAR 500 FINISH AND ALL TRIM FOR DOORS AND WINDOWS COLOR TO BE DETERMINED, SUBMIT SAMPLES.
9. DOOR AS SCHEDULED, REFER TO SHEET A-600.
10. CLASSIC PROFILE 26 GAUGE, PREFORMED METAL SIDING WITH KYNAR 500 FINISH COLOR TO BE DETERMINED, SUBMIT SAMPLES.
11. TIE NEWLY INSTALLED ASPHALT SHINGLES INTO EXISTING SHINGLES.

GENERAL NOTES

A. REFER TO FINISH SCHEDULE, SHEET A-600.
B. REFER TO DOOR SCHEDULE. SHEET A-600.
C. REFER TO REFLECTED CEILING PLAN FOR CEILING HEIGHTS, SHEET A-110.
D. REFER TO INDEX SHEET FOR WALL TYPES, SHEET A-002.
E. FIELD VERIFY ALL DIMENSIONS PRIOR TO CONSTRUCTION, SHEET A-101.
F. ALL ELECTRICAL TO BE NEC 2010 CODE COMPLIANT.
G. REFER TO FINISH SCHEDULE SHEET FOR COLOR AND MATERIAL SELECTIONS, SHEET A-600.
H. CONTRACTOR PRIOR TO CONSTRUCTION MUST HAVE ENGINEER'S SIGNATURE AND SEAL ON SUBMITTED SHOP DRAWINGS.

CONSULTANT:

IOWA DEPARTMENT OF NATURAL RESOURCES
ENGINEERING SERVICES - WALLACE BUILING
502 E. 9TH ST., DES MOINES, IA 50319-0034
P: 515.281.5918
F: 515.281.8685

BUILDING ELEVATIONS

BUILDING ADDITIONS AND IMPROVEMENTS FOR:
MT. AYR FISH HATCHERY

RINGGOLD COUNTY, IOWA

MT. AYR FISHERIES BUILDING

NO.	BY DATE	REVISION

DRAWN BY:	PROJECT NUMBER:
JL	13-04-80-02
CHK'D BY:	DATE:
RR	01.30.2013

SHEET No:
A-200

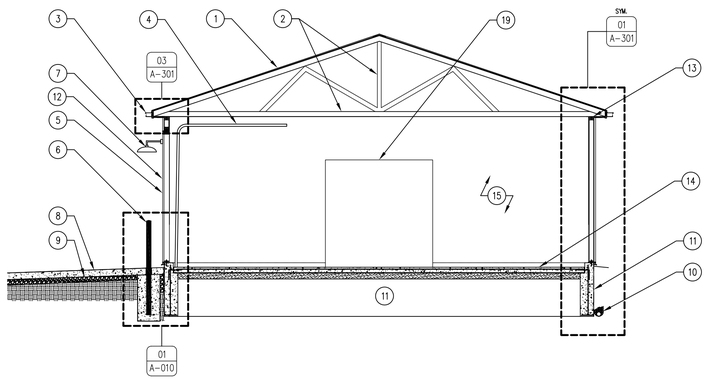

04 BUILDING SECTION
SCALE: 3/16" = 1'-0"

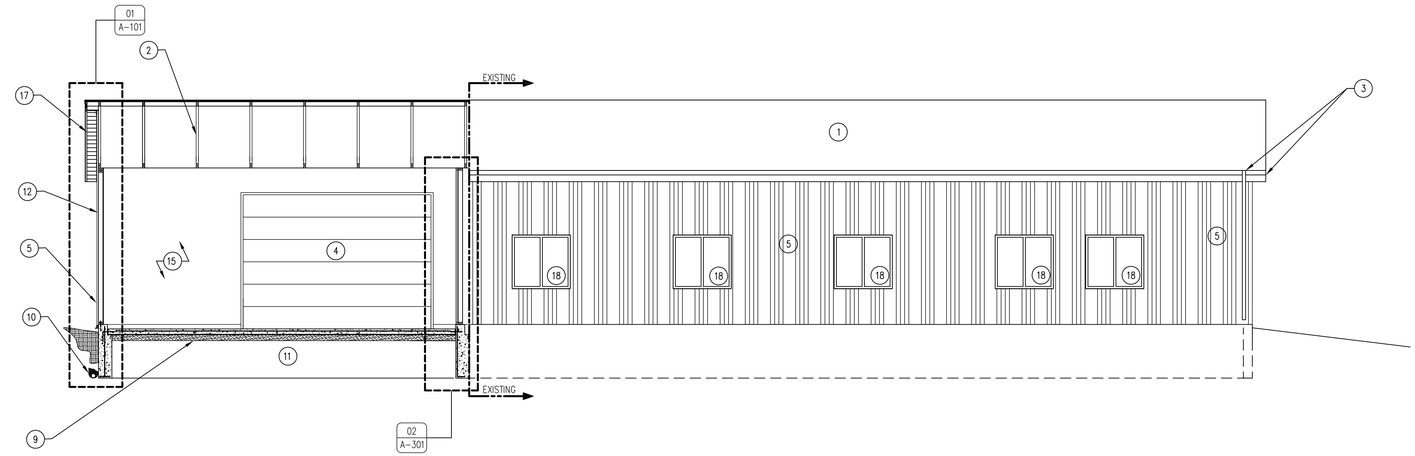

02 BUILDING SECTION
SCALE: 3/16" = 1'-0"

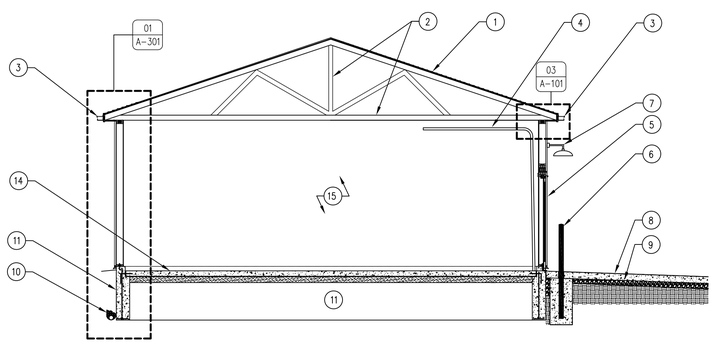

03 BUILDING SECTION
SCALE: 3/16" = 1'-0"

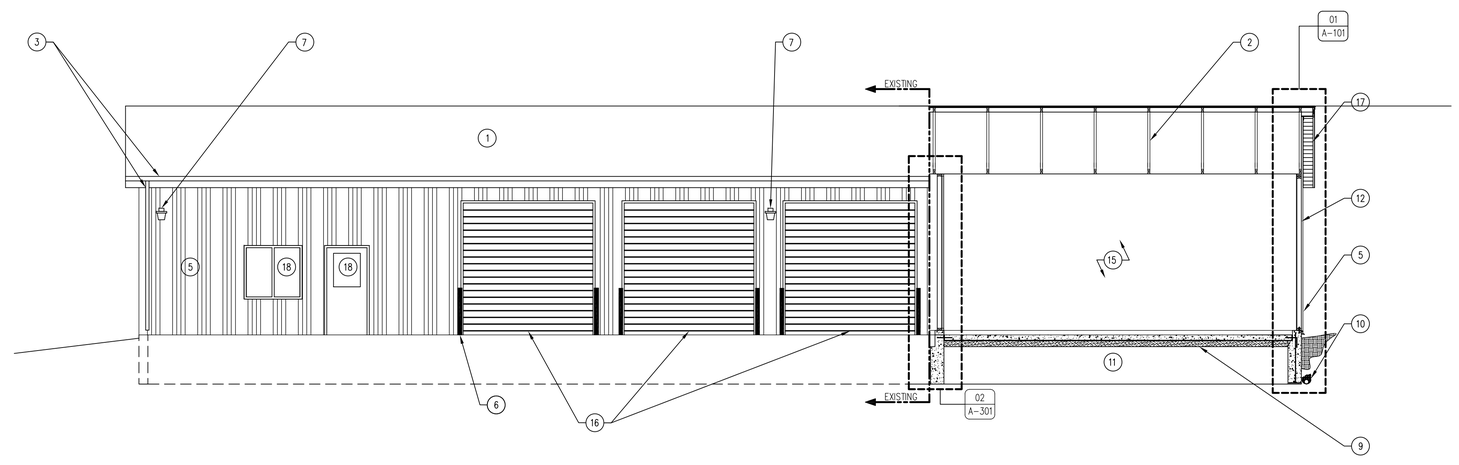

01 BUILDING SECTION
SCALE: 3/16" = 1'-0"

ALTERNATE BIDS

ALTERNATE #1. DEMOLISH, DISPOSE AND REPLACE CONCRETE PARKING LOT ADJACENT TO EXISTING STRUCTURE. REFER TO CIVIL DRAWINGS.

ALTERNATE #2. RECONSTRUCT EXISTING LOADING DOCK. REFER TO CIVIL DRAWINGS.

ALTERNATE #3. REMOVE ENTIRE EXISTING ROOF SYSTEM, AND REPLACE WITH ASPHALT SHINGLES, COLOR TO BE DETERMINED, SUBMIT SAMPLES.

ALTERNATE #4. REMOVE AND REPLACE EXISTING OVERHEAD GARAGE DOORS. REFER TO SHEET A-600 FOR DOOR SCHEDULE.

ALTERNATE #5. INSTALL NEW CONCRETE BOLLARDS LOCATED IN FRONT OF NEW AND EXISTING GARAGE DOORS. REFER TO SHEET A-010.

KEYNOTES

1. REMOVE EXISTING ROOF SYSTEM AND REPLACE WITH ASPHALT SHINGLES. COLOR TO BE DETERMINED. ALTERNATE BID #3.
2. TRUSS (SPECIFIED BY BUILDING SUPPLIER).
3. TIE GUTTERS FROM ADDITION TO FOUNDATION DRAIN TILE. SCREEN DRAIN ENTRY ABOVE SURFACE.
4. OVERHEAD GARAGE DOOR. REFER TO DOOR SCHEDULE A-600. INCLUDED IN BASE BID.
5. REMOVE ALL CORRUGATED METAL SIDING AROUND ENTIRE BUILDING. REPLACE WITH CLASSIC PROFILE 26 GAUGE, PREFORMED METAL SIDING PANEL WITH KYNAR 500, AND ALL TRIM FOR DOOR AND WINDOWS. COLOR TO BE DETERMINED, SUBMIT SAMPLES.
6. TRAFFIC BOLLARD WITH PLASTIC COVER SLEEVE. ALTERNATE BID #5. REFER TO A-010 FOR DETAIL.
7. LED WALL PACK WITH INTEGRAL PHOTOCELL. REFER TO SHEET A-110.
8. 6" CONCRETE SLAB #4 BARS 24" O.C. BOTH DIRECTIONS WITH 4" SUB-BASE.
9. COMPACTED GRANULAR FILL.
10. CONTINUOUS FOUNDATION DRAIN-TILE WITH 12" OF POROUS BACK FILL AND FILTER FABRIC
11. CONTINUOUS PERIMETER CONCRETE TRENCH FOUNDATION.
12. 2"x6" STUD WALL 16" O.C. TO BOTTOM OF TRUSS, COVERED WITH RE-WALL ESSENTIAL BOARD.
13. 2"x6" TOP PLATES .
14. 6" CONCRETE SLAB WITH #4 REBAR 24" O.C. BOTH DIRECTIONS WITH 4" SUB-BASE.
15. RE-WALL ESSENTIAL BOARD TO BOTTOM OF TRUSS.
16. REPLACE EXISTING OVERHEAD GARAGE DOOR, REFER TO A-600 DOOR SCHEDULE FOR REPLACEMENT. ALTERNATE BID #4.
17. VENTED FLUSH SOFFIT PANELS TO MATCH EXISTING.
18. EXISTING DOOR OR WINDOW TO REMAIN.
19. CUT AND REMOVE AREA FOR NEW PASS THROUGH BETWEEN BUILDINGS. CUT & REMOVE SECTION OF CONCRETE CURB TO ALLOW FOR NEW SLAB. REFER SHEET A-301 FOR DETAILS AND PROPER REINFORCEMENT.

GENERAL NOTES

A. REFER TO FINISH SCHEDULE, SHEET A-600.
B. REFER TO DOOR SCHEDULE. SHEET A-600.
C. REFER TO REFLECTED CEILING PLAN FOR CEILING HEIGHTS, SHEET A-120.
D. REFER TO INDEX SHEET FOR WALL TYPES, SHEET A-002.
E. FIELD VERIFY ALL DIMENSIONS PRIOR TO CONSTRUCTION, SHEET A-110.
F. ALL ELECTRICAL TO BE NEC 2010 CODE COMPLIANT.
G. REFER TO FINISH SCHEDULE SHEET FOR COLOR AND MATERIAL SELECTIONS, SHEET A-600.
H. CONTRACTOR PRIOR TO CONSTRUCTION MUST HAVE ENGINEER'S SIGNATURE AND SEAL ON SUBMITTED SHOP DRAWINGS.

CONSULTANT:

IOWA DEPARTMENT OF NATURAL RESOURCES
ENGINEERING SERVICES - WALLACE BUILING
502 E. 9TH ST., DES MOINES, IA 50319-0034
P: 515.281.5918
F: 515.281.8685

BUILDING SECTIONS

BUILDING ADDITIONS AND IMPROVEMENTS FOR:
MT. AYR FISH HATCHERY

RINGGOLD COUNTY, IOWA

MT. AYR FISHERIES BUILDING

NO.	BY DATE	REVISION

DRAWN BY:	PROJECT NUMBER:
JL	13-04-80-02
CHK'D BY:	DATE:
RR	01.30.2013

SHEET No:

A-300

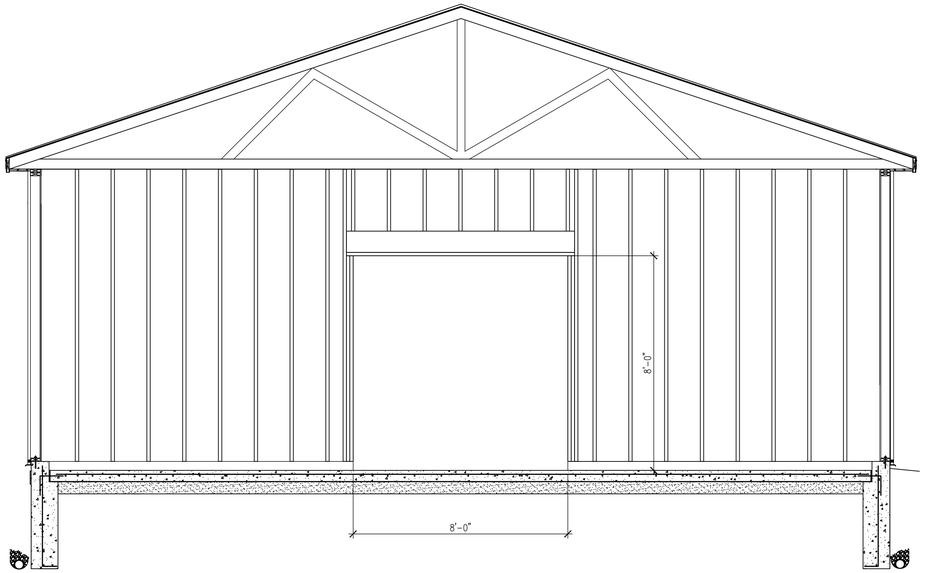

03 FRAMING SECTION
SCALE: 3/8"= 1'-0"

04 NOT USED
SCALE: 0"= 1'-0"

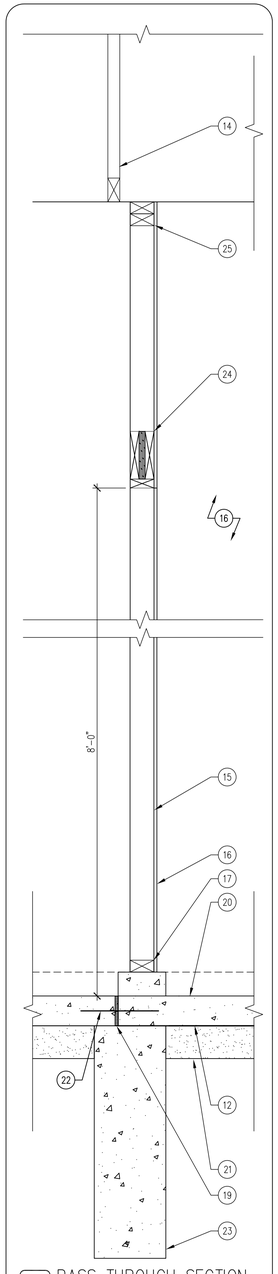

02 PASS THROUGH SECTION
SCALE: 1"= 1'-0"

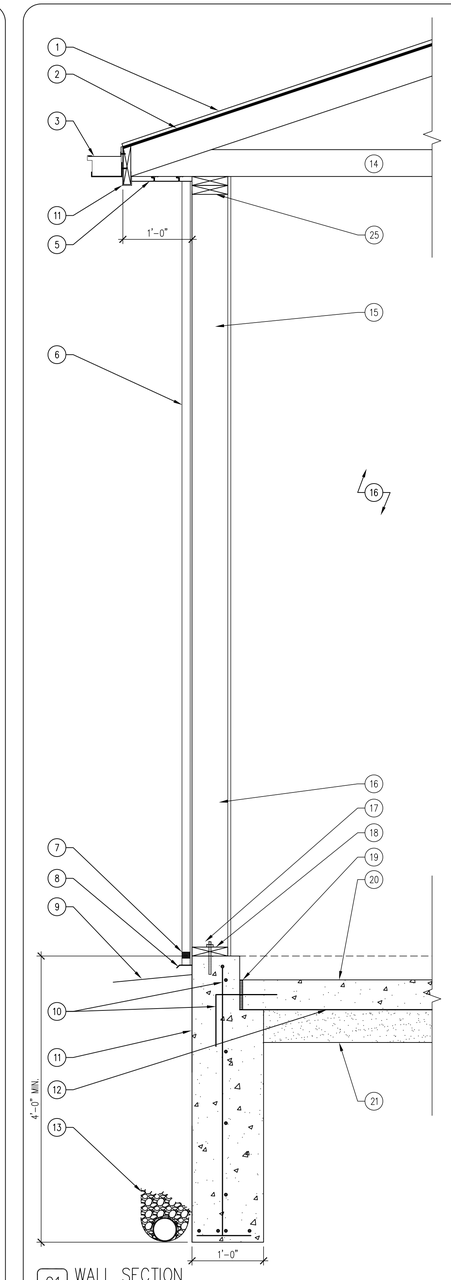

01 WALL SECTION
SCALE: 1" = 1'-0"

ALTERNATE BIDS

ALTERNATE #1. DEMOLISH, DISPOSE AND REPLACE CONCRETE PARKING LOT ADJACENT TO EXISTING STRUCTURE.

ALTERNATE #2. RECONSTRUCT EXISTING LOADING DOCK. REFER TO CIVIL DRAWINGS.

ALTERNATE #3. REMOVE ENTIRE EXISTING ROOF SYSTEM, AND REPLACE WITH ASPHALT SHINGLES, COLOR TO BE DETERMINED, SUBMIT SAMPLES.

ALTERNATE #4. REMOVE AND REPLACE EXISTING OVERHEAD GARAGE DOORS. REFER TO SHEET A-600 FOR DOOR SCHEDULE.

ALTERNATE #5. INSTALL NEW CONCRETE BOLLARDS LOCATED IN FRONT OF NEW AND EXISTING GARAGE DOORS.

KEYNOTES

1. ASPHALT SHINGLES. COLOR TO BE DETERMINED.
2. 3/4" PLYWOOD ROOF DECK SHEATHING WITH 30 POUND FELT, PER ROOFING MANUFACTURER'S RECOMMENDATIONS.
3. METAL GUTTER AND DOWNSPOUT SYSTEM TO MATCH, FASCIA AND SOFFIT.
4. 2x BLOCKING AS REQUIRED.
5. VENTED FLUSH SOFFIT PANELS TO MATCH EXISTING ROOF GUTTERS.
6. CLASSIC PROFILE 26 GAUGE PREFORMED METAL SIDING WITH KYNAR 500 FINISH AND REPLACE ALL TRIM FOR DOORS AND WINDOWS. COLOR TO BE DETERMINED, SUBMIT SAMPLES.
7. NEOPRENE GASKET.
8. FLASHING & DRIP EDGE.
9. EXISTING GRADE.
10. CONTINUOUS PERIMETER CONCRETE TRENCH FOUNDATION WITH #4 REINFORCEMENT BAR CONTINUOUS. 12" O.C. BOTH DIRECTIONS.AS SHOWN.
11. 2x10 FASCIA WITH BREAK METAL TRIM TO MATCH GUTTERS.
12. VAPOR BARRIER.
13. CONTINUOUS FOUNDATION DRAIN-TILE WITH 12" OF POROUS BACK FILL AND FILTER FABRIC. DAYLIGHT DRAIN TO NORTH OF BUILDING. REFER TO CIVIL DRAWINGS.
14. TRUSS, SPECIFIED BY PRE-ENGINEERED BUILDING SUPPLIER.
15. 2"x6" STUD WALL 16" O.C., COVERED WITH RE-WALL ESSENTIAL BOARD.
16. ½" RE-WALL ESSENTIAL BOARD.
17. EXISTING SILL PLATE.
18. 2"x6" TREATED SILL PLATE.
19. ½" EXPANSION JOINT.
20. 6" CONCRETE SLAB WITH #4 RE-BAR 24" O.C. BOTH DIRECTIONS WITH 4" SUB-BASE.
21. 4" SUB-BASE.
22. #5 SMOOTH DOWELS EPOXIED INTO EXISTING CONCRETE FOOTING 24" O.C. PRIOR TO POURING NEW SLAB.
23. EXISTING CONCRETE TRENCH FOOTING.
24. NEW OPENING STRUCTURAL HEADER. DOUBLE SUPPORT STUDS.
25. TOP PLATE, MATCH EXISTING BUILDING HEIGHT FOR ACCURATE MATCH.

GENERAL NOTES

A. REFER TO FINISH SCHEDULE, SHEET A-600.
B. REFER TO DOOR SCHEDULE. SHEET A-600.
C. REFER TO REFLECTED CEILING PLAN FOR CEILING HEIGHTS, SHEET A-110.
D. REFER TO INDEX SHEET FOR WALL TYPES, SHEET A-002.
E. FIELD VERIFY ALL DIMENSIONS PRIOR TO CONSTRUCTION, SHEET A-101.
F. ALL ELECTRICAL TO BE NEC 2010 CODE COMPLIANT.
G. REFER TO FINISH SCHEDULE SHEET FOR COLOR AND MATERIAL SELECTIONS, SHEET A-600.

CONSULTANT:

IOWA DEPARTMENT OF NATURAL RESOURCES
ENGINEERING SERVICES - WALLACE BUILING
502 E. 9TH ST., DES MOINES, IA 50319-0034
P: 515.281.5918
F: 515.281.8685

WALL SECTION & DETAILS

BUILDING ADDITIONS AND IMPROVEMENTS FOR:
MT. AYR FISH HATCHERY

RINGGOLD COUNTY, IOWA

MT. AYR FISHERIES BUILDING

NO.	BY DATE	REVISION

DRAWN BY:	PROJECT NUMBER:
JL	13-04-80-02
CHK'D BY:	DATE:
RR	01.30.2013

SHEET No:
A-301

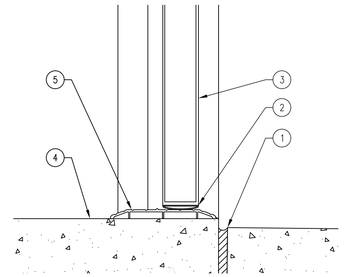

01 DOOR DETAIL–THRESHOLD
SCALE: 3" = 1'–0"

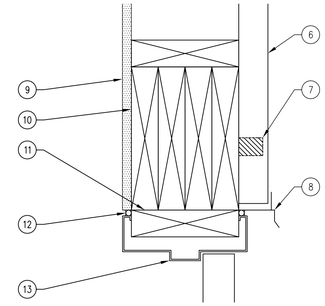

02 DOOR DETAIL– HEADER
SCALE: 3" = 1'–0"

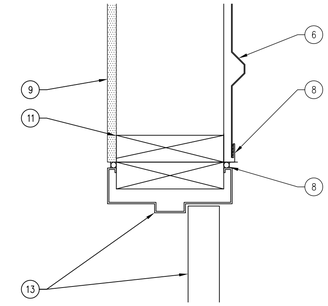

03 DOOR DETAIL– JAMB
SCALE: 3" = 1'–0"

04 NOT USED
SCALE: 0" = 1'–0"

04 NOT USED
SCALE: 0" = 1'–0"

05 NOT USED
SCALE: 0" = 1'–0"

06 NOT USED
SCALE: 0" = 1'–0"

04 NOT USED
SCALE: 0" = 1'–0"

DOOR TYPE

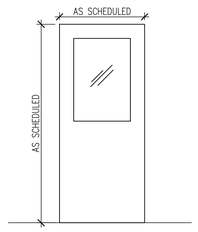

D–1

STEELCRAFT "L" SERIES
HALF–LIGHT
NON–INSULATED

FRAME TYPE

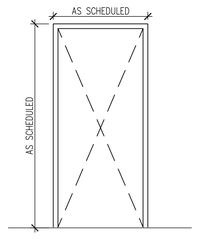

F–1

HOLLOW METAL

DOOR SCHEDULE

	DOOR NUMBER	DOOR: DIMENSION WIDTH	DOOR: DIMENSION HEIGHT	DOOR: DIMENSION THICK.	DOOR: TYPE	DOOR: GLASS	DOOR: FINISH	FRAME: DETAILS HEAD	FRAME: DETAILS JAMB	FRAME: DETAILS THRESHOLD	FRAME: TYPE	FRAME: FINISH	FIRE RATING LABEL	HARDWARE SET #	HARDWARE KEYSIDE ROOM NUMBER	COMMENTS
EXTERIOR	100A	10'–0"	10'–0"	–	–	MANUF.	–	–	–	–	–	–	–	–	–	ALTERNATE #4
	105A	10'–0"	10'–0"	–	–	MANUF.	–	–	–	–	–	–	–	–	–	ALTERNATE #4
	105B	10'–0"	10'–0"	–	–	MANUF.	–	–	–	–	–	–	–	–	–	ALTERNATE #4
	105C	8'–0"	8'–0"	–	–	–	–	–	–	–	–	–	–	–	–	CASED OPENING–NO DOOR
	106A	14'–0"	10'–0"	–	–	MANUF.	–	–	–	–	–	–	–	–	–	BASE BID GARAGE DOOR
	106B	3'–0"	7'–0"	1 3/4"	D–1	MANUF.	MANUF.	02/A–600	03/A–600	01/A–600	F–1	MANUF.	–	1	EXT.	EXT. STEELCRAFT "L" SERIES–HALF LIGHT

FINISH SCHEDULE

ROOM #	ROOM NAME	FLOORING	BASE	NORTH WALL FINISH	EAST WALL FINISH	SOUTH WALL FINISH	WEST WALL FINISH	CEILING	NOTES
106	GARAGE	CONC–1	–	ERW–1	ERW–1	ERW–1	ERW–1	–	–

FINISH DESCRIPTION

FINISH MARK	MATERIAL	MANUFACTURER INFO: COMPANY NAME	MANUFACTURER INFO: PRODUCT NUMBER	DIMENSION	COLOR	FINISH	COMMENTS
FLOOR FINISH							
CONC–1	CONCRETE FLOORING	–	–	–	–	SEALED	
EXTERIOR FINISH							
STL–1	STEEL STORM PANEL SIDING	METAL SALES MANUFACTURING CO.	CLASSIC PROFILE I	26 GAUGE	TBD	KYNAR 500	SUBMIT SAMPLES FOR APPROVAL
WALL FINISH							
ERW–1	ESSENTIAL RE–WALL	REWALL COMPANY	REWALL ESSENTIAL BOARD	1/2"	WHITE	–	–

KEYNOTES

1. CONCRETE WALKWAY
2. BRUSH TYPE GASKET FOR EXTERIOR DOORS.
3. METAL FLASHING, AS REQUIRED.
4. CONCRETE SLAB, REFER TO FINISH SCHEDULE.
5. ADA COMPLIANT EXTERIOR THRESHOLD.
6. STEEL SIDING, AS SCHEDULED.
7. NEOPRENE GASKET. PER SIDING MANUFACTURER.
8. METAL FLASHING W/ SEALANT, AS REQUIRED.
9. ½" RE–WALL ESSENTIAL BOARD.
10. HEADER, PER MANUFACTURER RECOMMENDATION.
11. 2x, PER MANUFACTURER RECOMMENDATION.
12. CONTINUOUS SEALANT AND BACKER ROD.
13. DOOR & FRAME AS SCHEDULED.

HARDWARE TYPES

HARDWARE SET NO. 1 – DOORS: 106B

3 EA. HINGES	FBB179 4 1/2 X 4 1/2
1 EA. OFFICE LOCKSET	ND53 F109 (ATHENS)
1 EA. FLOOR STOP	FS 444
3 EA. SILENCERS	SR66 (BLACK)

GENERAL NOTES

A. ALL HARDWARE MODEL NUMBERS BASED ON SCHLAGE "D–SERIES." LEVERS AND "IVES" ARCHITECTURAL TRIM/ STOPS UNLESS NOTED OTHERWISE.
B. HARDWARE FINISH TO BE : "SATIN NICKEL (619) ", UNLESS NOTED OTHERWISE.

CONSULTANT:

IOWA DEPARTMENT OF NATURAL RESOURCES
ENGINEERING SERVICES - WALLACE BUILING
502 E. 9TH ST., DES MOINES, IA 50319-0034
P: 515.281.5918
F: 515.281.8685

FINISH, DOOR & FRAME SCHEDULES

BUILDING ADDITIONS AND IMPROVEMENTS FOR:
MT. AYR FISH HATCHERY
MT. AYR FISHERIES BUILDING
RINGGOLD COUNTY, IOWA

NO.	BY / DATE	REVISION

DRAWN BY: JL
PROJECT NUMBER: 13-04-80-02
CHK'D BY: RR
DATE: 01.30.2013
SHEET No: A-600