IOWA DEPARTMENT OF NATURAL RESOURCES

PROJECT LOCATION

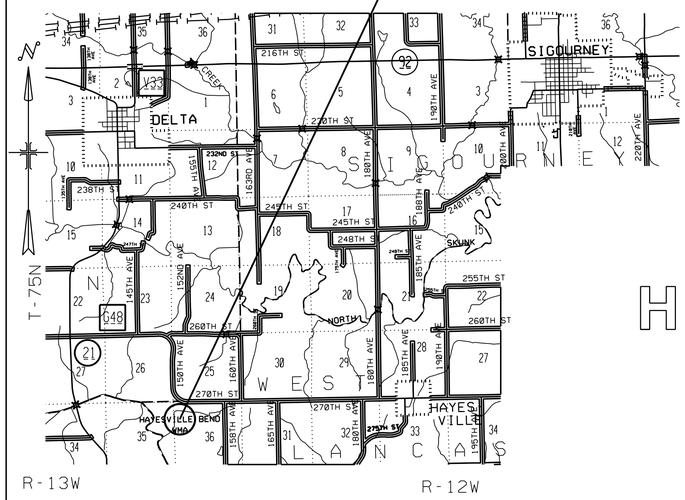

VICINITY MAP

CONSTRUCTION PLANS FOR HAYESVILLE BEND WETLAND

KEOKUK COUNTY

FLOOD DAMAGE REPAIRS

PROJECT NO. 09-05-54-01

PROJECT LOCATION

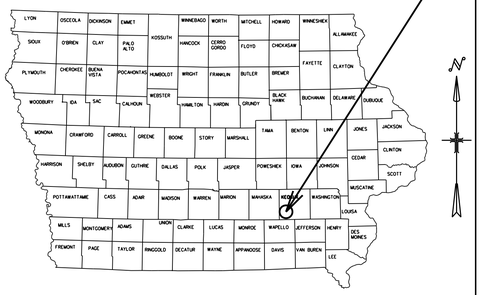

LOCATION MAP

IOWA ONE CALL
800/292-8989
TOLL FREE
CALL - BEFORE - YOU DIG

NOTE: NPDES STORMWATER PERMITS ARE REQUIRED FOR ANY LAND DISTURBING ACTIVITY THAT EXCEEDS ONE ACRE IN SIZE.

FOR STORMWATER GENERAL PERMIT ASSISTANCE, CONTACT IDNR STORMWATER COORDINATOR. (515)281-7017

PLANS PREPARED BY
ENGINEERING BUREAU
MANAGEMENT SERVICES DIVISION

ESTIMATE OF QUANTITIES

ITEM NO.	DESCRIPTION	QUANTITY
1	EXCAVATION, DIKE REPAIR, IN PLACE	4,584 C.Y.
2	EXCAVATION, SILT REMOVAL	3,222 C.Y.
3	REVETMENT, CLASS "D" RIPRAP	4,500 TONS
4	ENGINEERING FABRIC	5,556 S.Y.
5	SEEDING, FERTILIZING & MULCHING	LUMP SUM
	ALTERNATE:	
6	EXCAVATION, STRUCTURAL	300 C.Y.
7	WATER CONTROL STRUCTURE, COMPLETE	LUMP SUM
8	BEDDING, CLASS "A" CR. STONE	52 TONS

LICENSED PROFESSIONAL ENGINEER
JASON K. KRUSE
19718
CIVIL
IOWA

I HEREBY CERTIFY THAT THIS ENGINEERING DOCUMENT WAS PREPARED UNDER MY SUPERVISION AND THAT ENGINEERING DECISIONS WITH REGARD TO THE DESIGN WERE MADE BY ME UNDER THE LAWS OF THE STATE OF IOWA.

SIGNATURE DATE

JASON K. KRUSE
PRINTED OR TYPED NAME

MY LICENCE RENEWAL DATE IS DECEMBER 31, 2012
PAGES COVERED BY THIS SEAL: 1 THRU 4

APPROVED FOR LETTING

GABE LEE, P.E. - CHIEF - ENGINEERING BUREAU DATE

DALE GARNER - BUREAU CHIEF - WILDLIFE DIVISION DATE

DRAWING INDEX

TITLE	SHEET NO.
TITLE SHEET, ESTIMATE OF QUANTITIES, LOCATION MAPS	1
OVERALL AREA PLAN, DIKE REPAIR SITE	2
DIKE PROFILE AND DETAILS	3
DETAILS, WATER CONTROL STRUCTURE	4

PROJECT FLOOD DAMAGE REPAIRS PROJ. NO. 09-05-54-01

AREA HAYESVILLE BEND WETLAND COUNTY KEOKUK

SHEET 1 OF 4

KEN JACKSON - AUGUST 2011

...\Drawings\4407cov.dgn 1/4/2012 1:42:45 PM

N

GENERAL NOTES:

CHANNEL EXCAVATION TO BE DISPOSED OF ON SITE AT LOCATIONS SELECTED BY DNR WILDLIFE STAFF.

EARTHFILL MATERIAL FOR DIKE REPAIRS TO BE OBTAINED FROM WITHIN THE SITE AS APPROVED BY THE ENGINEER.

SILT FENCE IS TO BE INSTALLED AT EACH SITE AS APPROVED BY THE ENGINEER
(INCIDENTAL TO EXCAVATION BID ITEM)

TITLE OVERALL SITE MAP DRAWN BY MKJ DATE AUGUST '11

PROJECT HAYESVILLE BEND FLOOD DAMAGE REPAIRS COUNTY KEOKUK PROJ. NO. 09-05-54-01

SHEET 2 OF 4

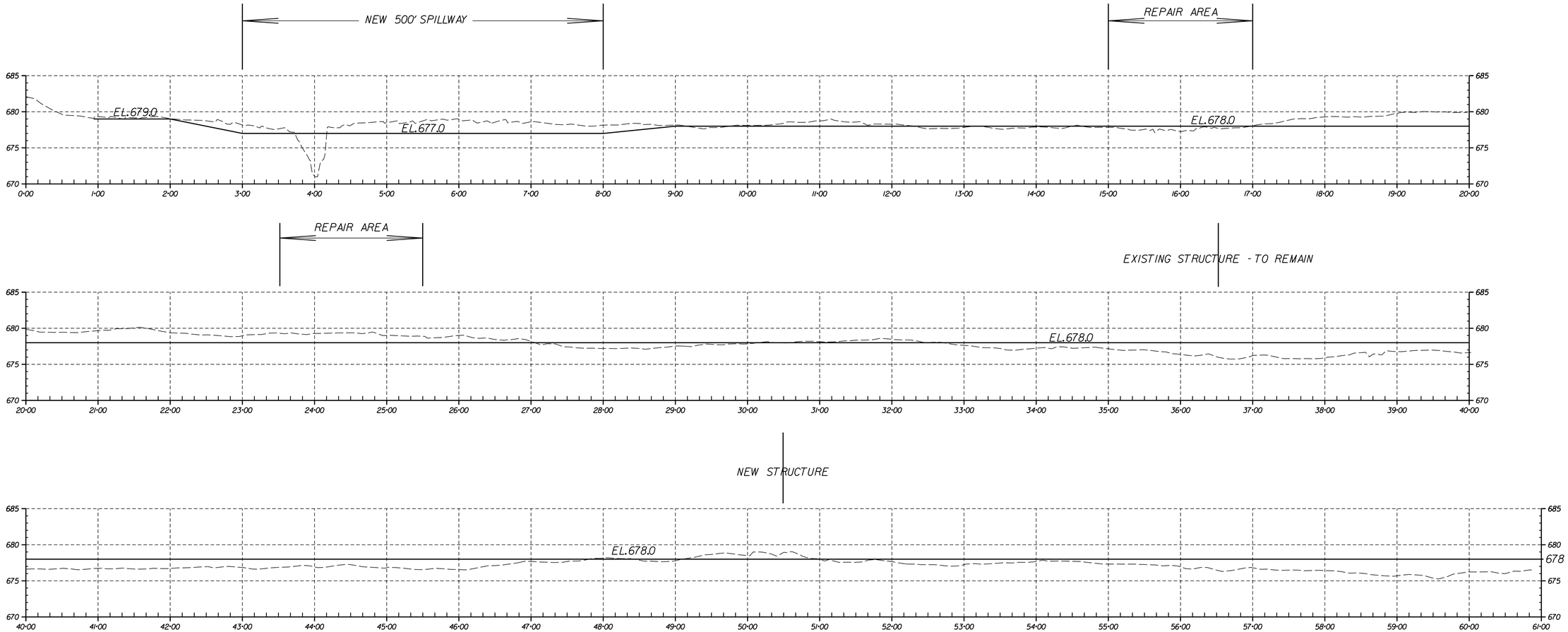

DIKE PROFILE

NOT TO SCALE

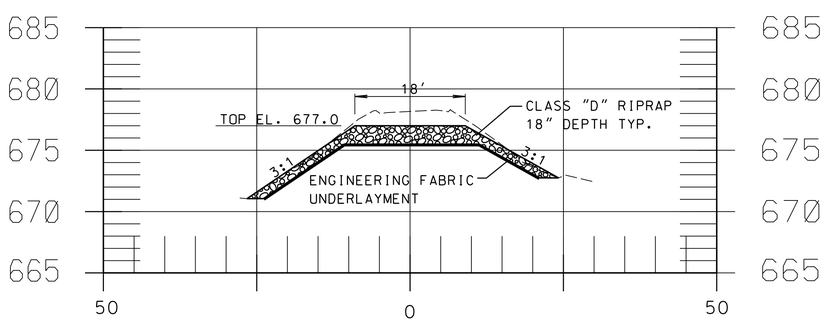

TYPICAL SPILLWAY SECTION

NOT TO SCALE

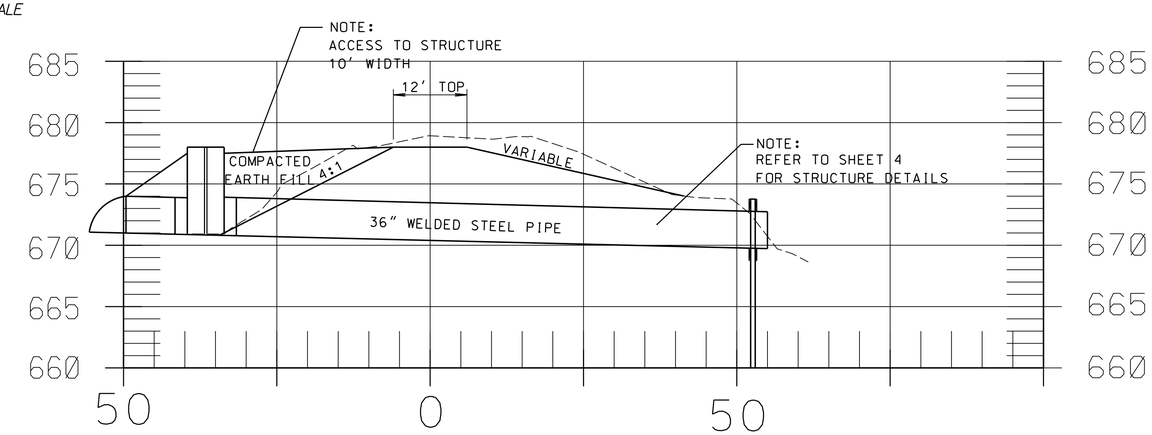

STA. 50+50 - NEW OUTLET STRUCTURE

NOT TO SCALE

TITLE DIKE PROFILE AND DETAILS DRAWN BY MKJ DATE JULY '11

PROJECT HAYESVILLE BEND FLOOD DAMAGE REPAIRS COUNTY KEOKUK PROJ. NO. 09-05-54-01

SHEET 3 OF 4

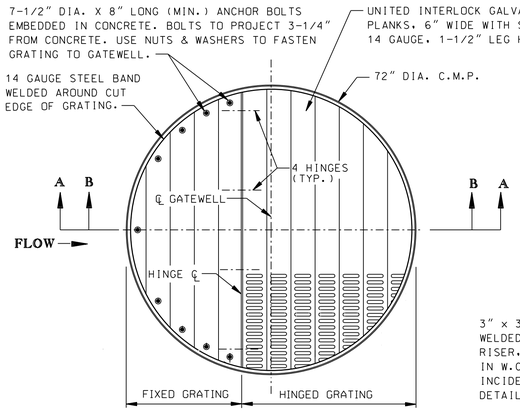

TOP PLAN
NO SCALE

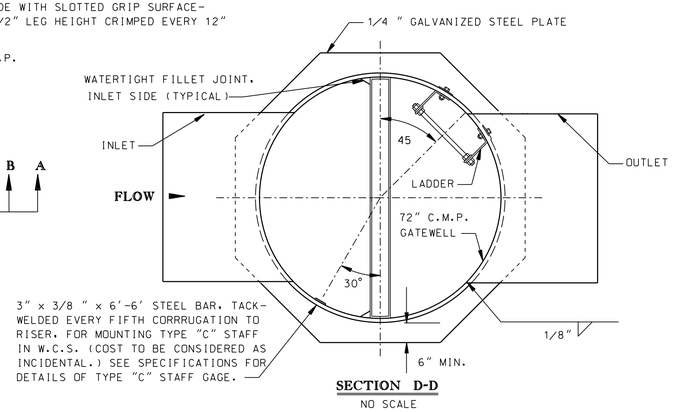

SECTION D-D
NO SCALE

NOTE:
IF REQUIRED FOR PROPER BEDDING, THE ENGINEER SHALL DIRECT THE CONTRACTOR TO OVER-EXCAVATE 12" BELOW PIPE FLOW LINE ELEVATION (CLASS 10 EXCAVATION) AND PLACE 12" DEPTH OF CLASS "A" CRUSHED STONE BEDDING (PAID FOR AS CR. STONE BEDDING ITEM)

UNLESS NOTED OTHERWISE, EACH WATER CONTROL STRUCTURE SHALL INCLUDE METAL APRON AND 2 SEEPAGE DIAPHRAGMS, INSTALLED AS SHOWN BELOW.

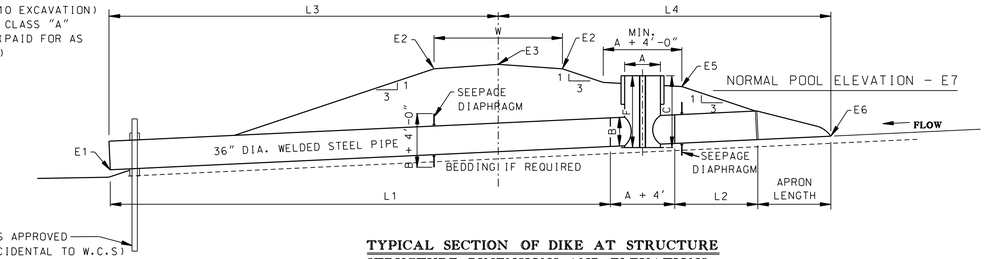

TYPICAL SECTION OF DIKE AT STRUCTURE
STRUCTURE DIMENSIONS AND ELEVATIONS
NO SCALE

CONTROL STRUCTURE NUMBER	STRUCTURE DIMENSIONS									ELEVATIONS (FT. M.S.L.)									SEEP. DIAP. SIZE FT.x FT.	NO. OF APRONS	NO. STOP LOGS	REMARKS
	A (IN.)	B (IN.)	C (FT.)	F (FT.)	L1 (FT.)	L2 (FT.)	L3 (FT.)	L4 (FT.)	W (FT.)	E1	E2	E3		E5	E6	E7						
2	72	36	7	7	86	8	55.0	55.0	12	670	677.5	678		677.5	671	677			7X7	1	24	

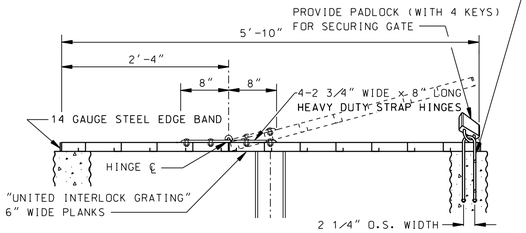

SECTION B-B
NO SCALE

3/8 " DIA. X 10" LONG GALVANIZED U-BOLT (STRESS PROOF HIGH STRENGTH STEEL) EMBEDDED IN CONCRETE. ALIGN TO PROJECT THROUGH SLOT IN GRATING. USE NUTS OR BEND ENDS TO EFFECT RESISTANCE TO PULL-OUT. U-BOLT SHALL BE AS MFRD. BY "DES MOINES BOLT SUPPLY, INC.", 3100 DELAWARE, DES MOINES, IA., PH. 515/265-7581 OR APPROVED EQUAL.

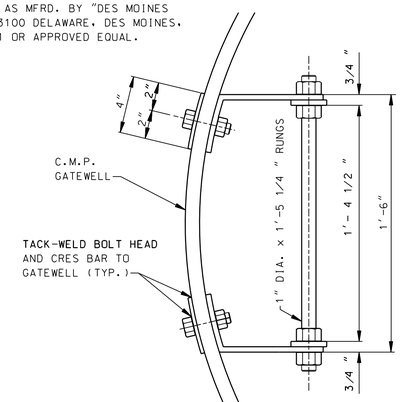

NOTE
ALL STAFF GAGES INSTALLED IN OR ON WATER CONTROL STRUCTURES, THIS PROJECT, SHALL BE INSTALLED AFTER STRUCTURES HAVE BEEN CONSTRUCTED AND BACK-FILL HAS BEEN PLACED. MARKINGS SHALL CORRESPOND TO MEAN SEA LEVEL ELEVATIONS, AS VERIFIED BY VERTICAL CONTROL SURVEY.

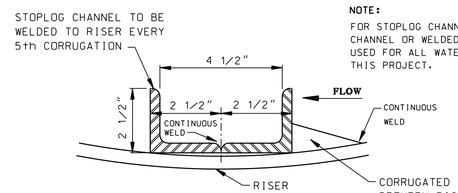

STOPLOG CHANNEL
CONSTRUCTION DETAILS
NO SCALE

NOTE:
FOR STOPLOG CHANNEL, EITHER C5x6.7 CHANNEL OR WELDED ANGLES SHALL BE USED FOR ALL WATER CONTROL STRUCTURES THIS PROJECT.

NOTE:
STOPLOG CHANNEL SHALL BE HOT DIP GALVANIZED, & MADE FROM: 2(2-1/2" x 2-1/2" x 3/8") ANGLES WELDED TOGETHER BY CONTINUOUS WELD, OR EQUAL.

NOTES:
CORRUGATED METAL PIPES FOR WATER CONTROL STRUCTURES SHALL BE: CORRUGATED, RIVETED OR WELDED SEAM, GALV., WITH 2-2/3 x 1/2" CORRUGATIONS, OR APPROVED EQUAL.

36" DIAMETER PIPE SHALL BE WELDED SEAM STEEL, AND JOINTS SHALL BE WATERTIGHT.

LADDERS, HINGED GRATES, 36" DIA.x 2' LENGTH PIPES AND CONCRETE SHALL BE INSTALLED ON RISER SECTIONS FOR W.C.S. IN CONFORMANCE WITH DETAILS SHOWN ON THIS SHEET.

CORRUGATED METAL PIPES FOR THE RISER SECTIONS SHALL BE ANNULARLY CORRUGATED AND RIVETED OR WELDED SEAM, GALVANIZED, & WITH 2-2/3 x1/2" CORRUGATIONS

STOPLOGS SHALL BE 4"x 4" (NOM.), CCA-TREATED, AND CUT TO LENGTH TO FIT BETWEEN STOPLOG CHANNELS. (INCIDENTAL TO W.C.S.)

STYLE "C" STAFF TYPE STREAM GAGES AND MOUNTING BASE PLATES SHALL BE INSTALLED IN THE DESIGNATED WATER CONTROL STRUCTURE. COST TO BE CONSIDERED AS INCIDENTAL TO THE COST OF CONTROL STRUCTURES (SEE DETAILS ABOVE AND IN THE SPECIFICATIONS).

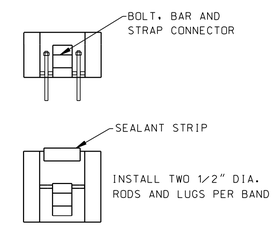

CONNECTION DETAIL
SINGLE HARNESS
NO SCALE

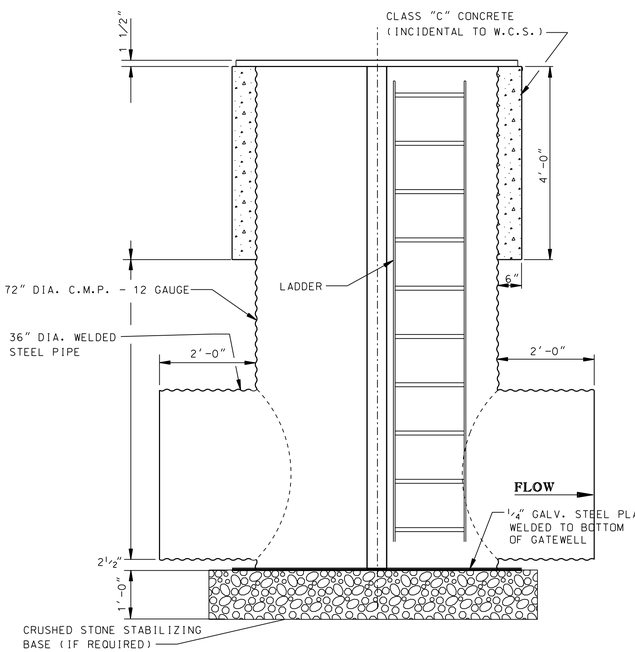

SECTION A-A
NO SCALE

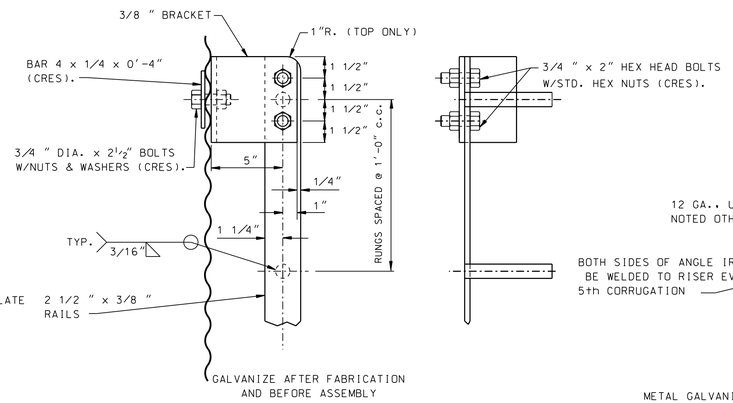

LADDER DETAILS
NO SCALE

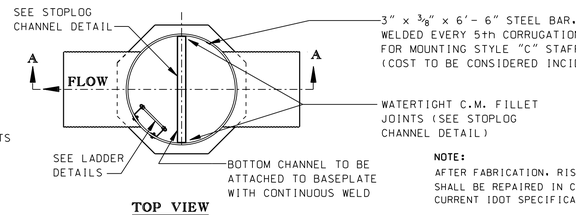

TOP VIEW
NO SCALE

NOTE:
AFTER FABRICATION, RISER SECTION COATING SHALL BE REPAIRED IN CONFORMANCE WITH CURRENT IDOT SPECIFICATIONS.

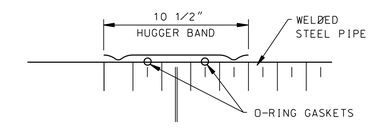

JOINT DETAIL (WATERTIGHT)
NO SCALE

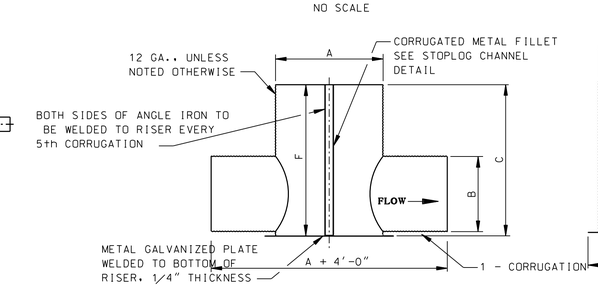

SECTION A-A
NO SCALE

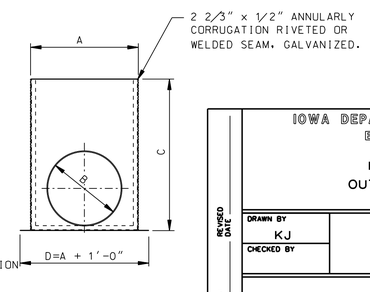

END VIEW
NO SCALE

IOWA DEPARTMENT OF NATURAL RESOURCES
ENGINEERING BUREAU

HAYESVILLE BEND WMA
OUTLET STRUCTURE DETAILS

DRAWN BY KJ	STANDARD DETAILS C.M.P. WATER CONTROL STRUCTURE	PROJECT NO. 09-05-54-01
CHECKED BY		DATE JULY 2011

REVISION DATE
REVISION DATE

SHEET 4 OF 4