IOWA DEPARTMENT OF NATURAL RESOURCES

CONSTRUCTION DOCUMENTS FOR LAKE ICARIA WETLAND RESTORATION ADAMS COUNTY, IOWA

PROJECT # 12-04-02-01

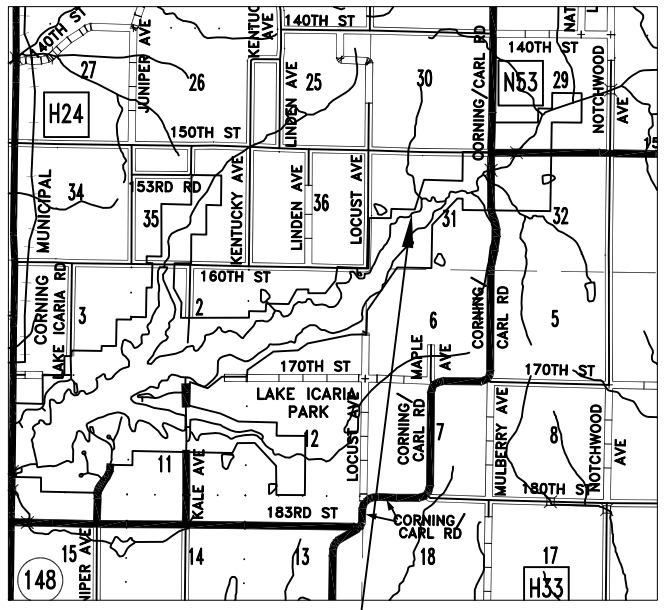

PROJECT LOCATION
SW¼ SEC31 T73N R33W

VICINITY MAP

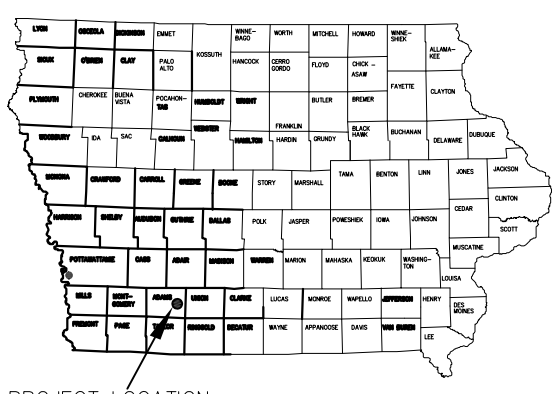

PROJECT LOCATION

LOCATION MAP

IOWA ONE CALL
800/292-8989
TOLL FREE
CALL - BEFORE - YOU DIG

ESTIMATE OF QUANTITIES		
Item No.	Description	Quantity
1	Earthfill	411 C.Y.
2	Excavation	411 C.Y.
3	Loose Rock Riprap, Grizzled Class E	3441 TONS
4	Concrete Grout	695 C.Y.
5	Geotextile	3410 S.Y.
6	Seeding	Lump Sum
7	42" Diameter Stoplog Riser, 16 gauge, Caulked Seam Complete	Lump Sum
8	30" Diameter CMP, 16 gauge, Caulked Seam	80 Feet
9	Site Dewatering	Lump Sum
10	Riprap Removal	Lump Sum
11	Regrade Riprap Base	Lump Sum

DIRECTORY

PROJECT MANAGER		CONSTRUCTION INSPECTOR	
COMPANY	IOWA DEPARTMENT OF NATURAL RESOURCES	COMPANY	IOWA DEPARTMENT OF NATURAL RESOURCES
ADDRESS	502 EAST 9TH STREET	ADDRESS	502 EAST 9TH STREET
CITY,STATE,ZIP	DES MOINES, IA, 50319	CITY,STATE,ZIP	DES MOINES, IA, 50319
CONTACT	N/A	CONTACT	MARK JOHNSON
TELEPHONE	515-281-5918	TELEPHONE	515-250-3713
FAX	515-281-6794	OFFICE	712-594-2313
EMAIL	N/A	EMAIL	mark.johnson@dnr.iowa.gov

PROJECT DESCRIPTION

THIS PROJECT CONSISTS OF THE REMOVAL AND REPLACEMENT OF EXISTING ROCK RIPRAP WITH GROUTED CLASS 'E' RIPRAP AND INCLUDED ALSO IS THE INSTALLING AN ADDITIONAL PIPE STRUCTURE.

AUTHORIZATION TO BID

AUTHORIZATION - PARKS | WILDLIFE | FISHERIES | LAW ENFORCEMENT | FORESTRY DATE

ENGINEERING BUREAU CHIEF DATE

SHEET INDEX

1	COVER SHEET & QUANTITIES
2	OVERALL PLAN VIEW
3	PROFILES
4	C.M.P. & VERTICAL INLET DETAILS
5	MATERIAL DISPOSAL PLAN

CONSULTANT:

IOWA DEPARTMENT OF NATURAL RESOURCES

ENGINEERING SERVICES - WALLACE BUILDING
502 E. 9TH ST., DES MOINES, IA 50319-0034

COVER SHEET

WETLAND REPAIR LAKE ICARIA

ADAMS COUNTY, IA

LAKE ICARIA STATE PARK

NO.	BY DATE	REVISION

DRAWN BY: JL
PROJECT NUMBER: 12-04-02-01
CHK'D BY: DR
DATE: SEPTEMBER 2012
SHEET No: 1

General Construction Notes:

1. Additional parking is available approximately 365 feet west and 225 feet north of the west end of embankment as directed by Engineer.
2. Any fence will be replaced if removed to perform job.

CONTRACTOR IS RESPONSIBLE FOR CALLING IOWA ONE CALL 1-800-292-8989

CONTROL POINT COORDINATES			
ITEM	NORTHING	EASTING	ELEVATION
Pin 1	14923092.140	1172759.797	1176.77
Pin 2	14923008.702	1173696.508	1171.395

1.0 Foot Contour Interval

100 0 100 200 300

Scale in Feet

IOWA DEPARTMENT OF NATURAL RESOURCES
ENGINEERING SERVICES - WALLACE BUILING
502 E. 9TH ST., DES MOINES, IA 50319-0034
P: 515.281.5918
F: 515.281.8685

OVERALL PLAN VIEW
WETLAND REPAIR LAKE ICARIA

LAKE ICARIA STATE PARK — ADAMS COUNTY, IA

DRAWN BY: JL	PROJECT NUMBER: 12-04-02-01
CHK'D BY: DR	DATE: SEPTEMBER 2012
SHEET No: 2	

Notes
1. Existing rock riprap is to be removed from the chute area.
2. Base area is to be re-graded to lines and grade shown on drawings.
3. All Rock Riprap is to be grouted.
4. Rock Riprap is to be placed to a uniform depth of 24" through out chute.

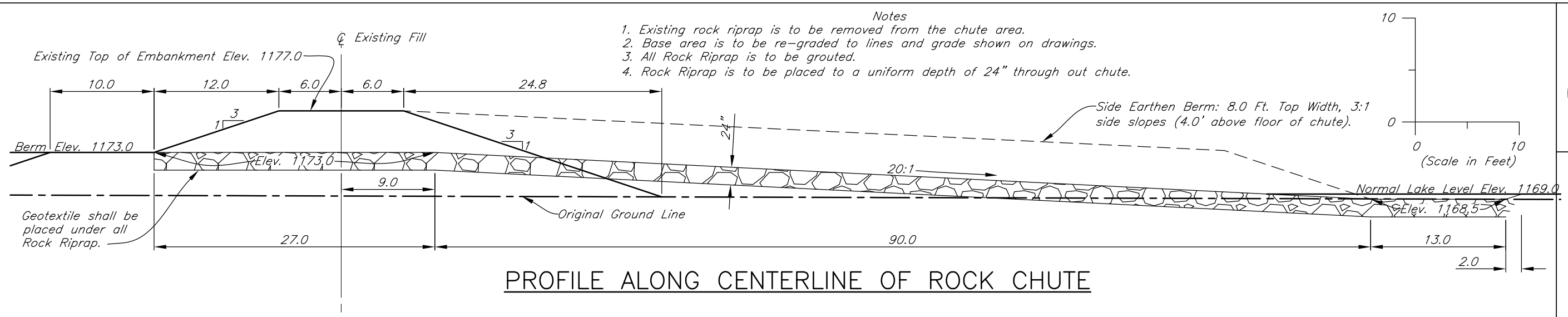

PROFILE ALONG CENTERLINE OF ROCK CHUTE

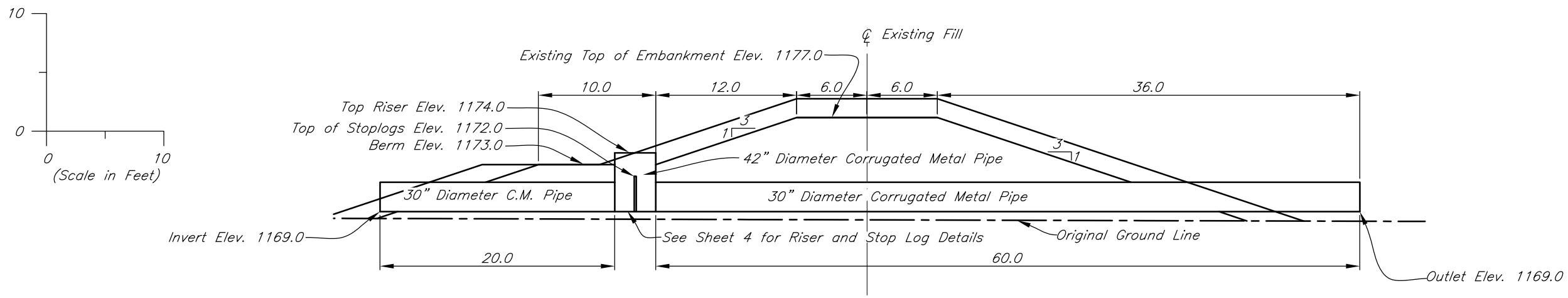

PROFILE ALONG CENTERLINE OF NEW PIPE

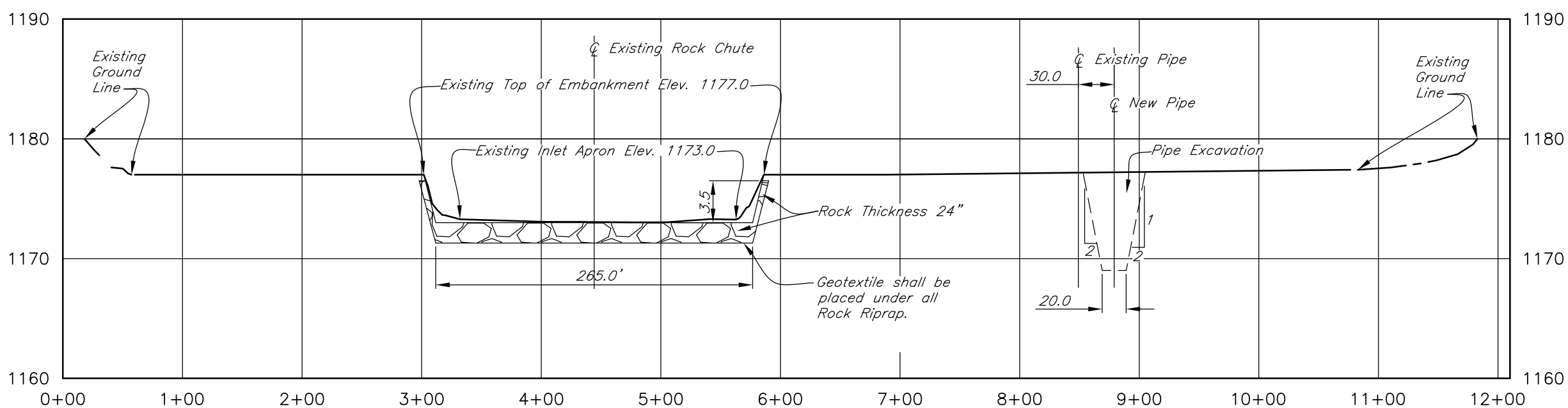

PROFILE ALONG CENTERLINE OF EXISTING FILL

IOWA DEPARTMENT OF NATURAL RESOURCES
ENGINEERING SERVICES - WALLACE BUILDING
502 E. 9TH ST., DES MOINES, IA 50319-0034
P: 515.281.5918
F: 515.281.8685

PROFILES
WETLAND REPAIR LAKE ICARIA
LAKE ICARIA STATE PARK
ADAMS COUNTY, IA

DRAWN BY: JL	PROJECT NUMBER: 12-04-02-01
CHK'D BY: DR	DATE: SEPTEMBER 2012
SHEET No: 3	

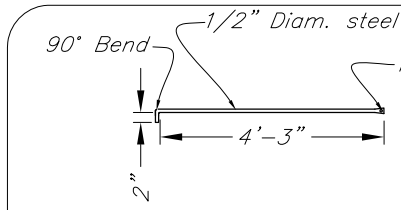

LOCKING ROD DETAIL

Not to Scale

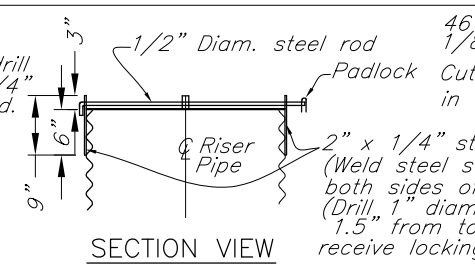

SECTION VIEW

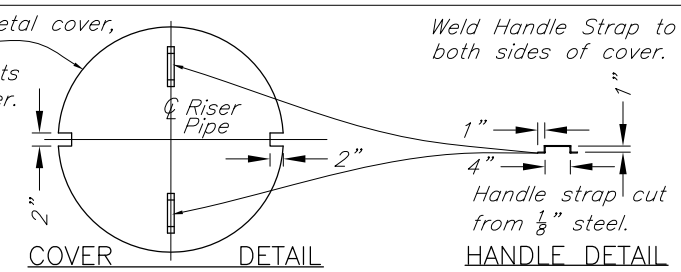

COVER DETAIL

HANDLE DETAIL

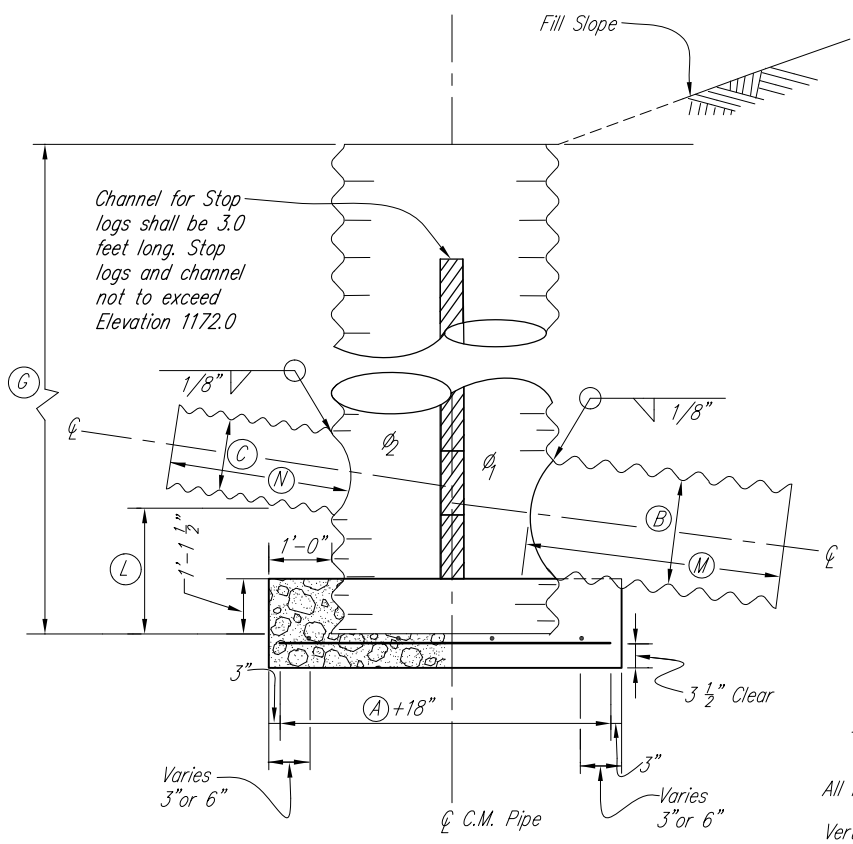

SECTION ON CENTERLINE

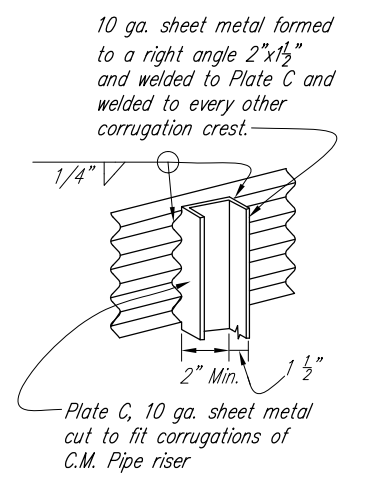

DETAILS OF CHANNEL

Notes:

All holes for bolts shall be 9/16" diam.

Vertical Inlet to be shop fabricated. After welding, damaged coatings shall be repaired as specified in Construction Specification 51.

Minimum (M) & (N) Dimension

B≤ 36" M=2'-1 1/2"

B> 36" M=4'-1 1/2"

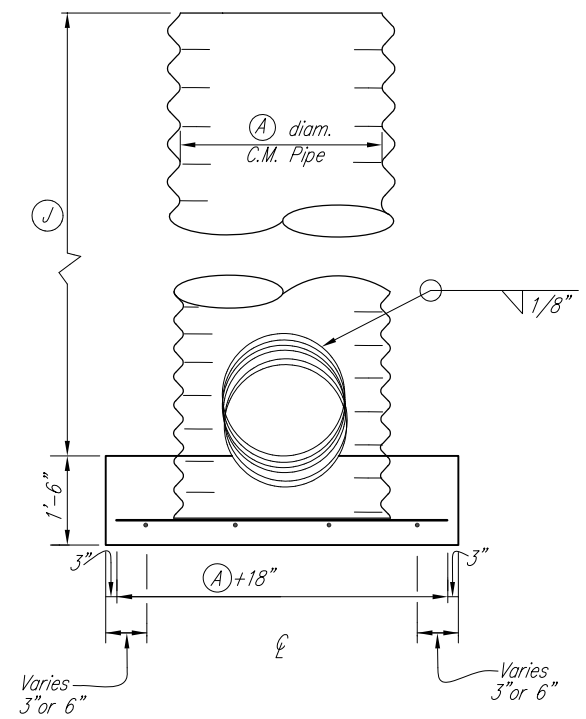

REAR ELEVATION

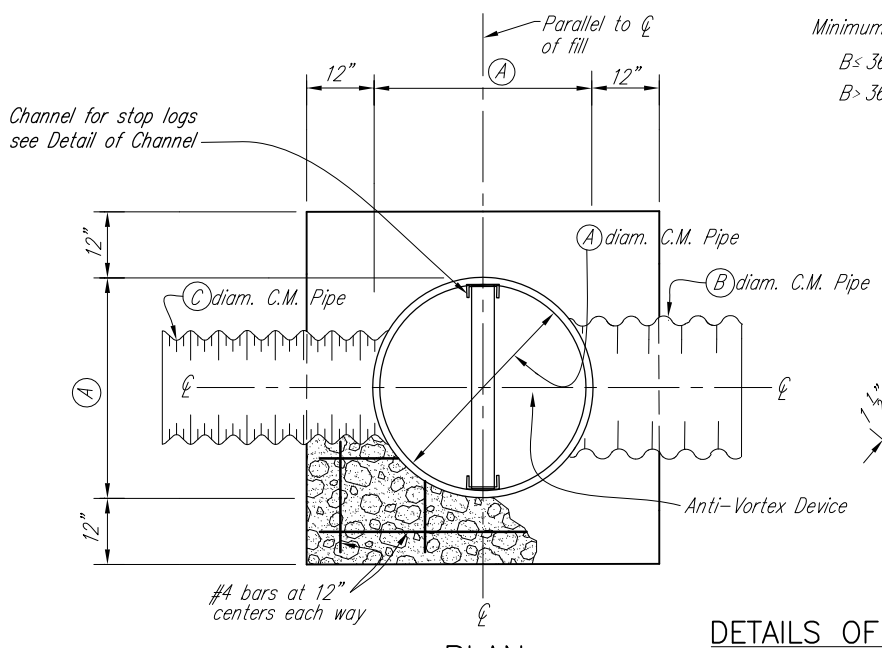

PLAN

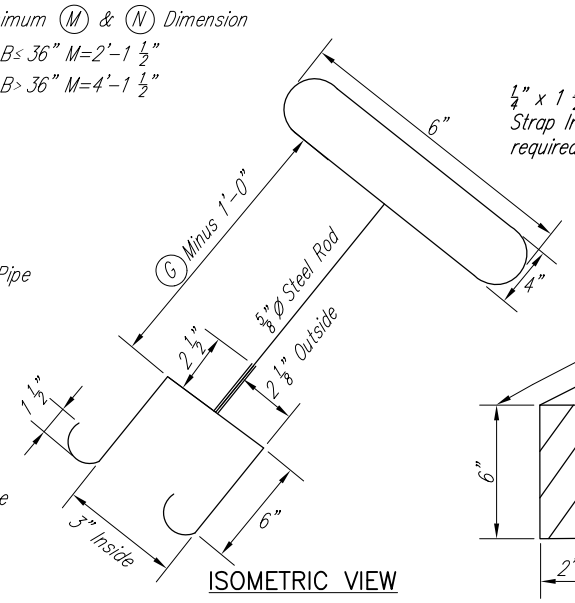

ISOMETRIC VIEW

DETAILS OF STOP LOGS LIFTING HOOK

Not to Scale

DETAILS OF INLET

Not to Scale

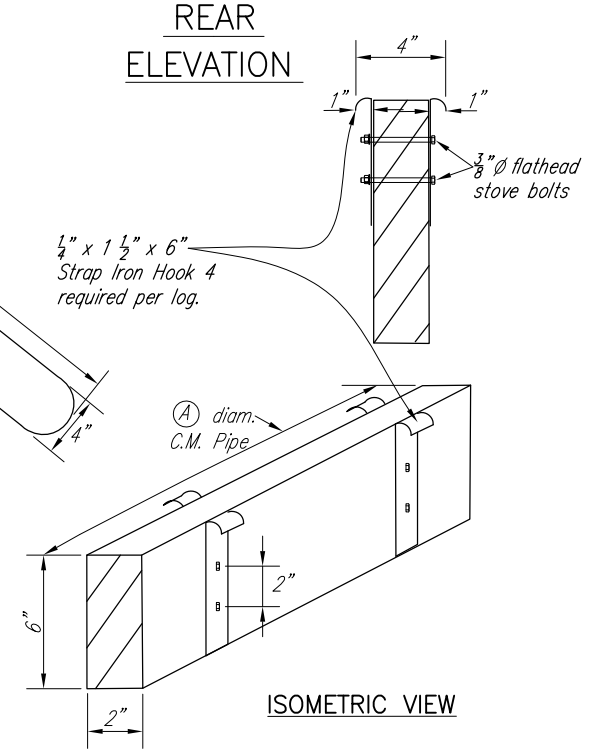

ISOMETRIC VIEW

DETAILS OF STOP LOGS

Not to Scale

TABLE–DIMENSIONS AND MATERIAL

	DIMENSIONS
(A)	42"
(B)	30"
(C)	30"
(D)	N/A
(E)	N/A
(F)	N/A
(G)	6'-1 1/2"
(H)	N/A
(J)	5'-0"
(K)	N/A
(L)	1'-1 1/2"
(M)	2'-1 1/2"
(N)	2'-1 1/2"
Sheet Thickness for (A) diam.	16 ga.
Corrugations for (A) diam.	3"x1"
Sheet Thickness for (B) diam.	16 ga.
Corrugations for (B) diam.	2 2/3"x 1/2"
Sheet Thickness for (C) diam.	16 ga.
Corrugations for (C) diam.	2 2/3"x 1/2"
Sheet Thickness for Anti-Vortex Device	N/A
Corrugations for Anti-Vortex Device	N/A
MATERIAL ITEMS	QUANTITY REQUIRED
Locking Bar	1 No.
46" Diameter Metal Cover	1 No.
Stop Logs	6 No.
1/4"x 1 1/2"x 6" Strap Hook	24 No.
3/8" Flathead Stove Bolts with washers	24 No.
Ø Degrees–Angles Ø1	90°
Ø Degrees–Angles Ø2	90°
Slope of (B) diam. pipe in ft./ft.	0.00
Slope of (C) diam. pipe in ft./ft.	0.00

Corrugated Metal Pipe shall have caulked seams.

Pipe shall have watertight connections, two foot wide hugger bands with rod and lugs shall be used.

VERTICAL INLET BASE QUANTITIES

Dimension (in) (A)	Concrete Cu. Yd.	Steel Reinforcement #4 Bar		
		Length Each Bar	Number of Bars	Total Weight Pounds
18"	0.68	3'-0"	8	16.0
24"	0.89	3'-6"	8	18.7
30"	1.13	4'-0"	10	26.7
36"	1.39	4'-6"	10	30.1
42"	1.68	5'-0"	12	40.1
48"	2.00	5'-6"	12	44.1
54"	2.35	6'-0"	14	56.1
60"	2.72	6'-6"	14	60.8

IOWA DEPARTMENT OF NATURAL RESOURCES
ENGINEERING SERVICES - WALLACE BUILING
502 E. 9TH ST., DES MOINES, IA 50319-0034
P: 515.281.5918
F: 515.281.8685

C.M.P. & VERTICAL INLET DETAILS
WETLAND REPAIR LAKE ICARIA

LAKE ICARIA STATE PARK — ADAMS COUNTY, IA

DRAWN BY: | PROJECT NUMBER:
CHK'D BY: | DATE:
SHEET No: 4

IOWA DEPARTMENT OF NATURAL RESOURCES
ENGINEERING SERVICES - WALLACE BUILING
502 E. 9TH ST., DES MOINES, IA 50319-0034
P: 515.281.5918
F: 515.281.8685

MATERIAL DISPOSAL PLAN
WETLAND REPAIR LAKE ICARIA

LAKE ICARIA STATE PARK — ADAMS COUNTY, IA

DRAWN BY: JL	PROJECT NUMBER: 12-04-02-01
CH'D BY: DR	DATE: SEPTEMBER 2012
SHEET No: 5	